COMPONENTS OF CONTRACT PLANS SET

STATE OF FLORIDA
DEPARTMENT OF TRANSPORTATION

CONTRACT PLANS

FINANCIAL PROJECT ID 423446-9-52-01
(FEDERAL TRANSIT ADMINISTRATION FUNDS)
ORANGE, OSCEOLA COUNTY (75, 92)

CENTRAL FLORIDA COMMUTER RAIL TRANSIT
PHASE 2 SOUTH

DRAWING NO.
C00.001

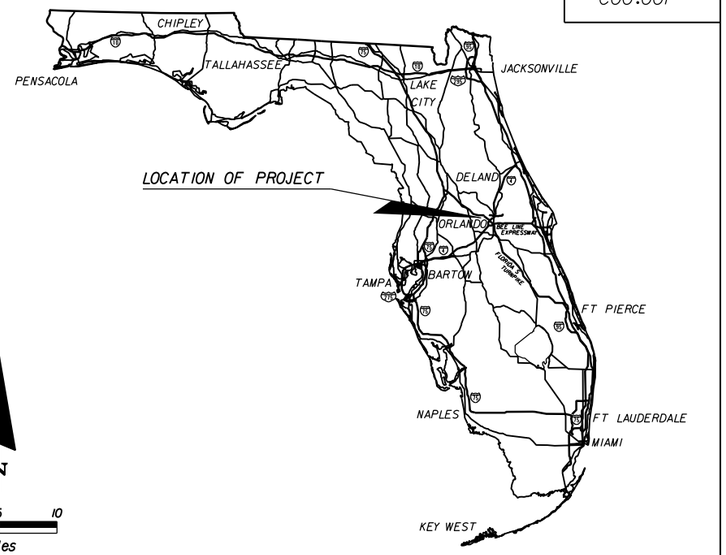

INDEX OF STATION PLANS

SEE "INDEX OF SHEETS" ON DRAWING NO. C00.001B-C00.001UU

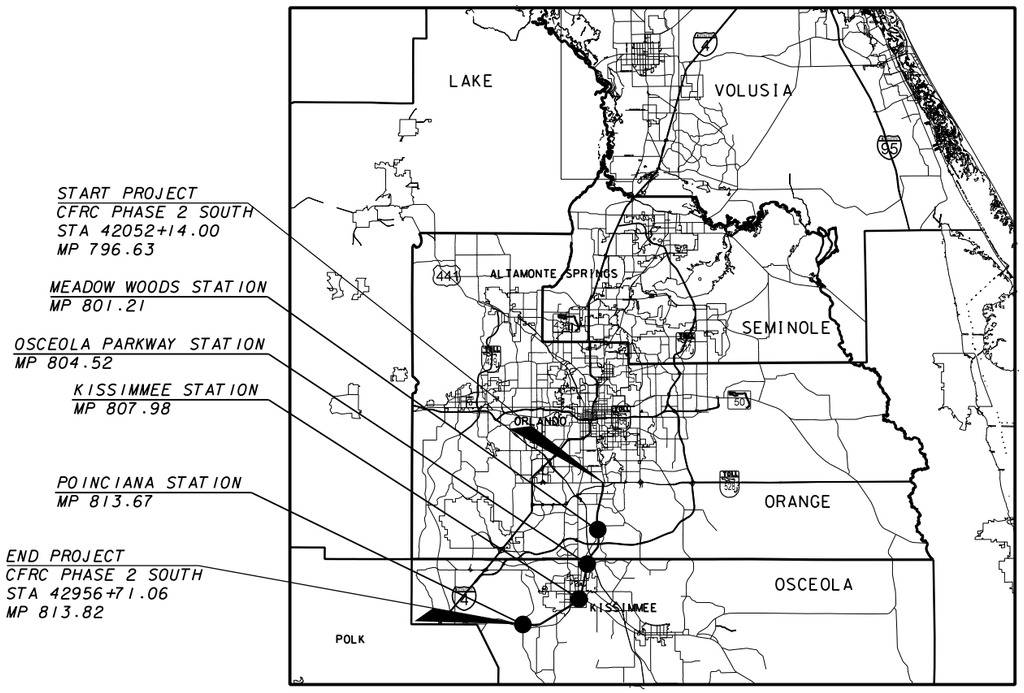

PLANS PREPARED BY:

AECOM TECHNICAL SERVICES, INC.
300 COLONIAL CENTER, SUITE 130
LAKE MARY, FL 32746
PHONE (407) 549-4200 FAX (407) 549-4201

CERTIFICATE OF AUTHORIZATION # 8115 www.aecom.com

CONTRACT # C-8714

VENDOR # 952661922-011

NOTE: THE SCALE OF THESE PLANS MAY HAVE CHANGED DUE TO REPRODUCTION.

GOVERNING STANDARDS:

CENTRAL FLORIDA RAIL CORRIDOR
MAINTENANCE OF WAY INSTRUCTIONS, DATED 2015

CENTRAL FLORIDA RAIL CORRIDOR
SIGNAL DESIGN INSTRUCTIONS, DATED 2015:

FLORIDA DEPARTMENT OF TRANSPORTATION,
2015 DESIGN STANDARDS

FLORIDA DEPARTMENT OF TRANSPORTATION,
STANDARD SPECIFICATIONS FOR ROAD AND
BRIDGE CONSTRUCTION DATED 2015,
AS AMENDED BY CONTRACT DOCUMENTS.

APPLICABLE DESIGN STANDARDS MODIFICATIONS: 12-15-14

For Design Standards Modifications click on
"Design Standards" at the following web site:
http://www.dot.state.fl.us/rddesign/

REVISIONS

STATION LOCATIONS ARE BASED ON CSXT "A" LINE MILEPOST

LENGTH OF PROJECT		
	LINEAR FEET	MILES
ROADWAY	N/A	N/A
BRIDGES	N/A	N/A
NET LENGTH OF PROJECT	N/A	N/A
EXCEPTIONS	N/A	N/A
GROSS LENGTH OF PROJECT	90463	17.133

FDOT PROJECT MANAGER: DAVID J. COOKE

KEY SHEET REVISIONS		
DATE	BY	DESCRIPTION
		DAVID J. COOKE

FISCAL YEAR	SHEET NO.
15	1

NOTICE: THE OFFICIAL RECORD OF THIS SHEET IS THE ELECTRONIC FILE SIGNED AND SEALED UNDER RULE 61G15-23.003, F.A.C.

DRAWING NO.
C00.001B

DRAWING NUMBERING KEY

DISCIPLINE

C	CIVIL
T	TRACK
B	BRIDGES, CULVERTS AND WALLS
H	HARDSCAPE
L	LANDSCAPE
IR	IRRIGATION
A	ARCHITECTURE
S	STRUCTURE
E	ELECTRICAL
P	PLUMBING
FP	FIRE PROTECTION
V	HVAC
W	GRAPHICS
M	COMMUNICATIONS

STATION PROJECT IDENTIFIER

00	GENERAL NOTES, INDEX, ABBREVIATIONS, ETC.
14	MEADOW WOODS STATION
15	OSCEOLA PARKWAY STATION
16	KISSIMMEE STATION
17	POINCIANA STATION
18	VSLMF
20	DETAILS
30	CORRIDOR

SHEET TYPE CODE

0	GENERAL, SITE PLAN, ETC.
1	LIFE SAFETY
2	FLOOR PLANS
3	REFLECTED CEILING PLANS
4	ENLARGED PLANS
5	ELEVATIONS
6	SECTIONS
7	DETAILS
8	SCHEDULES

SHEET INDEX

INDEX BY SHEET NO.

SHEET NO.	DRAWING NO.	TITLE
1	C00.001	KEY SHEET
2	C00.001B	SHEET INDEX
3	C00.001C	SHEET INDEX
4	C00.001D	SHEET INDEX
5	C00.001E	SHEET INDEX
6	C00.001F	SHEET INDEX
7	C00.001G	SHEET INDEX
8	C00.001H	SHEET INDEX
9	C00.001I	SHEET INDEX
10	C00.001J	SHEET INDEX
11	C00.001K	SHEET INDEX
12	C00.001L	SHEET INDEX
13	C00.001M	SHEET INDEX
14	C00.001N	SHEET INDEX
15	C00.001O	SHEET INDEX
16	C00.001P	SHEET INDEX
17	C00.001Q	SHEET INDEX
18	C00.001R	SHEET INDEX
19	C00.001S	SHEET INDEX
20	C00.001T	SHEET INDEX
21	C00.001U	SHEET INDEX
22	C00.001BB	SHEET INDEX
23	C00.001CC	SHEET INDEX
24	C00.001DD	SHEET INDEX
25	C00.001EE	SHEET INDEX
26	C00.001FF	SHEET INDEX
27	C00.001GG	SHEET INDEX
28	C00.001HH	SHEET INDEX
29	C00.001II	SHEET INDEX
30	C00.001JJ	SHEET INDEX
31	C00.001KK	SHEET INDEX
32	C00.001LL	SHEET INDEX
33	C00.001MM	SHEET INDEX
34	C00.001NN	SHEET INDEX
35	C00.001OO	SHEET INDEX
36	C00.001PP	SHEET INDEX
37	C00.001QQ	SHEET INDEX
38	C00.001RR	SHEET INDEX
39	C00.001SS	SHEET INDEX
40	C00.001TT	SHEET INDEX
41	C00.001UU	SHEET INDEX
42	C00.006A	ABBREVIATIONS
43	C00.006B	ABBREVIATIONS
44	C00.006C	ABBREVIATIONS
45	C00.006D	ABBREVIATIONS
46	C00.006E	ABBREVIATIONS
47	C00.007A	PROJECT SYMBOLS
48	C00.007B	PROJECT SYMBOLS
49	C00.007C	PROJECT SYMBOLS
50	C00.007D	PROJECT SYMBOLS
51	C00.007E	PROJECT SYMBOLS
52	C00.002A	CIVIL GENERAL NOTES
53	C00.002B	UTILITY GENERAL NOTES
54	C00.002C	UTILITY GENERAL NOTES
55	C00.002K	WATER CONNECTION GENERAL NOTES
56	C00.002D	LANDSCAPE GENERAL NOTES
57	C00.002E	STRUCTURAL GENERAL NOTES
~~58~~	~~C00.002F~~	~~STRUCTURAL GENERAL NOTES~~
59	C00.002G	COMMUNICATION GENERAL NOTES
60	C00.002H	ELECTRICAL GENERAL NOTES
~~61~~	~~C00.002J~~	~~ITS DUCT GENERAL NOTES~~
62	C00.002L	ARCHITECTURAL GENERAL NOTES
~~63~~	~~C00.002M~~	~~FIRE PROTECTION GENERAL NOTES~~
~~64~~	~~T00.001~~	~~TRACK GENERAL NOTES~~
~~65~~	~~B00.001~~	~~CRASHWALL GENERAL NOTES~~
~~66~~	~~T00.009~~	~~TYPICAL SECTIONS~~
~~67~~	~~T00.010~~	~~TYPICAL SECTIONS~~
~~68~~	~~T00.011~~	~~TYPICAL SECTIONS~~
~~69~~	~~T00.012~~	~~TYPICAL SECTIONS~~
~~70~~	~~T00.013~~	~~TYPICAL SECTIONS~~
71	T00.014	TYPICAL SECTIONS
~~72~~	~~T00.015~~	~~TYPICAL SECTIONS VSLMF~~
~~73~~	~~T00.016~~	~~TRACK DRIP PAN DETAILS~~
74	C00.003A	TYPICAL SECTIONS
75	C00.003B	TYPICAL SECTIONS
76	C00.003C	TYPICAL SITE DETAILS
77	C00.003D	TYPICAL SITE DETAILS
78	C00.003E	TYPICAL SITE DETAILS
79	C00.004A	GUIDESIGN WORK SHEET
80	H20.701	HARDSCAPE DETAILS PAVING DETAILS
81	H20.702	HARDSCAPE DETAILS PAVING DETAILS
82	H20.703	HARDSCAPE DETAILS PAVING DETAILS
83	H20.704	HARDSCAPE DETAILS PAVING DETAILS
84	H20.705	HARDSCAPE DETAILS PAVING DETAILS
85	H20.706	HARDSCAPE DETAILS PAVING DETAILS
86	H20.707	HARDSCAPE DETAILS PAVING DETAILS
87	H20.708	HARDSCAPE DETAILS PAVING DETAILS
88	H20.709	HARDSCAPE DETAILS PAVING DETAILS
89	H20.710	HARDSCAPE DETAILS PAVING DETAILS
90	H20.711	HARDSCAPE DETAILS FENCING DETAILS
~~91~~	~~H20.712~~	~~HARDSCAPE DETAILS FENCING DETAILS~~
92	H20.713	HARDSCAPE DETAILS WALL DETAILS
93	H20.714	HARDSCAPE DETAILS WALL DETAILS
94	H20.715	HARDSCAPE DETAILS SITE FURNINGS DETAILS
95	H20.716	HARDSCAPE DETAILS SITE AMENITIES DETAILS
96	H20.717	HARDSCAPE DETAILS SITE AMENITIES DETAILS
97	H20.718	HARDSCAPE DETAILS SITE FURNINGS DETAILS
98	H20.719	HARDSCAPE DETAILS SITE FURNINGS DETAILS
99	H20.720	HARDSCAPE DETAILS SITE FURNINGS DETAILS
100	H20.721	HARDSCAPE DETAILS SITE FURNINGS DETAILS
101	H20.726	HARDSCAPE DETAILS ART IN TRANSIT DETAILS
102	H20.727	HARDSCAPE DETAILS ART IN TRANSIT DETAILS
103	H20.728	HARDSCAPE DETAILS ART IN TRANSIT DETAILS
104	H20.729	HARDSCAPE DETAILS ART IN TRANSIT DETAILS
105	H20.730	HARDSCAPE DETAILS ART IN TRANSIT DETAILS
106	H20.731	HARDSCAPE DETAILS ART IN TRANSIT DETAILS
107	H20.732	HARDSCAPE DETAILS ART IN TRANSIT DETAILS
108	H20.763	HARDSCAPE DETAILS STRUCTURAL DETAILS
109	H20.764	HARDSCAPE DETAILS STRUCTURAL DETAILS
~~110~~	~~H20.765~~	~~HARDSCAPE DETAILS STRUCTURAL DETAILS~~
111	H20.766	HARDSCAPE DETAILS STRUCTURAL DETAILS
112	H20.767	HARDSCAPE DETAILS STRUCTURAL DETAILS
113	H20.768	HARDSCAPE DETAILS STRUCTURAL DETAILS
114	L20.705	TYPICAL LANDSCAPE DETAILS MEADOW WOODS STATION

NOTICE: THE OFFICIAL RECORD OF THIS SHEET IS THE ELECTRONIC FILE SIGNED AND SEALED UNDER RULE 61G15-23.003, F.A.C.

REVISIONS

DATE	BY	DESCRIPTION	DATE	BY	DESCRIPTION

TRANSPORTATION
AECOM TECHNICAL SERVICES, Inc.
300 Colonial Center Pkwy, Suite 130
Lake Mary, FL. 32746
T 407.549.4200 F 407.549.4201
Certificate of Authorization No. 8115
DAVID S. BURWELL PE NO. 55853 www.aecom.com

STATE OF FLORIDA
DEPARTMENT OF TRANSPORTATION

ROAD NO.	COUNTY	FINANCIAL PROJECT ID
CFRC P2S	VARIOUS	423446-9-52-01

CENTRAL FLORIDA COMMUTER RAIL TRANSIT (CFCRT) PHASE 2 SOUTH

INDEX OF SHEETS

SHEET NO. 2

DRAWING NO.
C00.001C

SHEET NO.	DRAWING NO.	TITLE
115	L20.706	TYPICAL LANDSCAPE DETAILS MEADOW WOODS STATION
116	L20.707	TYPICAL LANDSCAPE DETAILS OSCEOLA PARKWAY STATION
117	L20.708	TYPICAL LANDSCAPE DETAILS KISSIMMEE STATION
118	L20.709	TYPICAL LANDSCAPE DETAILS POINCIANA STATION
119	L20.710	TYPICAL LANDSCAPE DETAILS
120	A20.301	TYPICAL ENLARGED CANOPY REFLECTED CEILING PLANS
121	A20.401	TYPICAL PAVER PATTERN PLAN
122	A20.415	PAVER PATTERN PLAN & CONCRETE BASE PLAN BENEATH
123	A20.416	PAVER PATTERN PLAN & EQUIPMENT LAYOUT
124	A20.501	CANOPY A ENLARGED ELEVATIONS
125	A20.502	CANOPY A ENLARGED ELEVATIONS
126	A20.571	CANOPY F ENLARGED ELEVATIONS
127	A20.572	CANOPY F ENLARGED ELEVATIONS
128	A20.573	CANOPY F ENLARGED ELEVATIONS
129	A20.605	CANOPY "A" SECTION
130	A20.606	CANOPY "A" SECTION
131	A20.607	CANOPY "A" SECTIONS
132	A20.614	CANOPY "A" MINI-HIGH SECTION AT MIDSPAN
133	A20.615	CANOPY "A" MINI-HIGH SECTION AT COLUMN
134	A20.671	CANOPY "F" - TYPICAL PLATFORM SECTION AT COLUMN
135	A20.672	CANOPY "F" - TYPICAL PLATFORM SECTION AT MIDSPAN
136	A20.673	CANOPY "F" MINI-HIGH PLATFORM SECTION
137	A20.674	CANOPY "F" MINI-HIGH PLATFORM SECTION
138	A20.675	CANOPY "F" STANDARD & MIN-HIGH CROSS SECTION
139	A20.701	CANOPY "A" DETAILS
140	A20.705	CANOPY "A" DETAIL SECTIONS
141	A20.764	CANOPY "F" DETAIL SECTIONS
142	A20.765	CANOPY "F" DETAIL SECTIONS
143	A20.766	CANOPY "F" - PLATFORM SECTIONS - KISSIMMEE STATION
144	A20.767	CANOPY "F" - PLATFORM SECTIONS - KISSIMMEE STATION
145	A20.790	GUARDRAIL / HANDRAIL DETAILS
146	A20.791	GUARDRAIL / HANDRAIL DETAILS
147	A20.794	MISCELLANEOUS DETAILS
148	S00.001	DESIGN LOADS
~~149~~	~~S00.002~~	~~DESIGN LOADS~~
150	S00.003	FOUNDATION SCHEDULES
~~151~~	~~S00.004~~	~~PRECAST LINTEL SCHEDULE~~
152	S00.005	3D VIEW - CANOPY A
153	S00.006	3D VIEW - CANOPY F
154	S20.401	ENLARGED PLANS
155	S20.402	ENLARGED PLANS
156	S20.403	ENLARGED PLANS
157	S20.404	ENLARGED PLANS
158	S20.405	ENLARGED PLANS
159	S20.406	ENLARGED PLANS
160	S20.407	ENLARGED PLANS
161	S20.408	ENLARGED PLANS
162	S20.409	ENLARGED PLANS
163	S20.601	OVERALL SECTIONS
164	S20.602	OVERALL SECTIONS
165	S20.603	OVERALL SECTIONS
166	S20.604	OVERALL SECTIONS
167	S20.605	OVERALL SECTIONS
168	S20.606	OVERALL SECTIONS
169	S20.607	OVERALL SECTIONS
170	S20.608	OVERALL SECTIONS
171	S20.609	OVERALL SECTIONS
172	S20.610	OVERALL SECTIONS
173	S20.611	OVERALL SECTIONS
174	S20.612	OVERALL SECTIONS
175	S20.613	OVERALL SECTIONS
176	S20.614	OVERALL SECTIONS
177	S20.615	OVERALL SECTIONS
178	S20.616	OVERALL SECTIONS
179	S20.617	OVERALL SECTIONS
180	S20.618	OVERALL SECTIONS
~~181~~	~~S20.619~~	~~OVERALL SECTIONS~~
~~182~~	~~S20.620~~	~~OVERALL SECTIONS~~
183	S20.701	SECTIONS AND DETAILS
184	S20.702	SECTIONS AND DETAILS
185	S20.703	SECTIONS AND DETAILS
186	S20.704	SECTIONS AND DETAILS
187	S20.705	SECTIONS AND DETAILS
188	S20.706	SECTIONS AND DETAILS
189	S20.707	SECTIONS AND DETAILS
190	S20.708	SECTIONS AND DETAILS
191	S20.709	SECTIONS AND DETAILS
192	S20.710	SECTIONS AND DETAILS
193	S20.711	SECTIONS AND DETAILS
194	S20.712	SECTIONS AND DETAILS
~~195~~	~~S20.713~~	~~SECTIONS AND DETAILS~~
~~196~~	~~S20.714~~	~~SECTIONS AND DETAILS~~
~~197~~	~~S20.715~~	~~SECTIONS AND DETAILS~~
~~198~~	~~S20.716~~	~~SECTIONS AND DETAILS~~
199	E00.701	ELECTRICAL DETAILS
200	E00.702	ELECTRICAL DETAILS
201	E00.703	ELECTRICAL DETAILS
202	E00.704	ELECTRICAL DETAILS
203	E00.705	ELECTRICAL DETAILS
204	E00.706	ELECTRICAL PANEL SCHEDULES
205	E00.707	ELECTRICAL PANEL SCHEDULES
206	E00.708	ELECTRICAL PANEL SCHEDULES
207	E00.709	ELECTRICAL PANEL SCHEDULES
208	E00.710	ELECTRICAL PANEL SCHEDULES
209	E00.711	ELECTRICAL PANEL SCHEDULES
210	E00.712	ELECTRICAL PANEL SCHEDULES
211	E00.713	ELECTRICAL PANEL SCHEDULES
~~212~~	~~E00.714~~	~~ELECTRICAL PANEL SCHEDULES~~
~~213~~	~~E00.715~~	~~ELECTRICAL PANEL SCHEDULES~~
~~214~~	~~E00.716~~	~~ELECTRICAL PANEL SCHEDULES~~
~~215~~	~~E00.717~~	~~ELECTRICAL PANEL SCHEDULES~~
216	E00.719	ELECTRICAL PANEL SCHEDULES
217	E00.720	ELECTRICAL PANEL SCHEDULES
218	E00.721	ELECTRICAL PANEL SCHEDULES
219	E00.722	ELECTRICAL PANEL SCHEDULES
220	E00.723	ELECTRICAL PANEL SCHEDULES
221	E00.724	ELECTRICAL PANEL SCHEDULES
222	E00.718	LIGHT FIXTURES
223	W00.001	GENERAL INFORMATION
224	W20.700-A	GRAPHICS DETAILS
225	W20.700-B	GRAPHICS DETAILS
226	W20.701	GRAPHICS DETAILS
227	W20.702	GRAPHICS DETAILS
228	W20.705	GRAPHICS DETAILS
229	W20.708	GRAPHICS DETAILS
230	W20.710	GRAPHICS DETAILS

NOTICE: THE OFFICIAL RECORD OF THIS SHEET IS THE ELECTRONIC FILE SIGNED AND SEALED UNDER RULE 61G15-23.003, F.A.C.

REVISIONS					
DATE	BY	DESCRIPTION	DATE	BY	DESCRIPTION

TRANSPORTATION
AECOM TECHNICAL SERVICES, Inc.
300 Colonial Center Pkwy, Suite 130
Lake Mary, FL. 32746
T 407.549.4200 F 407.549.4201
Certificate of Authorization No. 8115
DAVID S. BURWELL PE NO. 55853 www.aecom.com

STATE OF FLORIDA
DEPARTMENT OF TRANSPORTATION

ROAD NO.	COUNTY	FINANCIAL PROJECT ID
CFRC P2S	VARIOUS	423446-9-52-01

CENTRAL FLORIDA COMMUTER RAIL TRANSIT (CFCRT) PHASE 2 SOUTH

INDEX OF SHEETS

SHEET NO. 3

PrinceK 5/26/2015 2:52:53 PM Q:\4234469520\roadway\C00-001B - Sheet Index.dgn

DRAWING NO.
C00.00ID

SHEET NO.	DRAWING NO.	TITLE
231	W20.712	GRAPHICS DETAILS
232	W20.713	GRAPHICS DETAILS
233	W20.714	GRAPHICS DETAILS
234	W20.715	GRAPHICS DETAILS
235	W20.716A	GRAPHICS DETAILS
236	W20.717	GRAPHICS DETAILS
237	W20.719	GRAPHICS DETAILS
238	W20.719B	GRAPHICS DETAILS
239	W20.720	GRAPHICS DETAILS
240	W20.722	GRAPHICS DETAILS
241	W20.723	GRAPHICS DETAILS
242	W20.725	GRAPHICS DETAILS
243	W20.726	GRAPHICS DETAILS
244	W20.727	GRAPHICS DETAILS
245	W20.728	GRAPHICS DETAILS
246	W20.729	GRAPHICS DETAILS
247	W20.800	GENERAL INFORMATION, MESSAGE SCHEDULE
248	W20.801	COLOR SCHEDULE
249	W20.802	COLOR SCHEDULE
250	W20.803	COLOR SCHEDULE
251	W20.804	COLOR SCHEDULE
252	M00.004	COMMUNICATIONS CONDUIT & CABLE SCHEDULE
253	M00.005	NETWORK BLOCK DIAGRAM
254	M20.701	TYPE I TYPICAL STATION ELECTRONICS DETAILS 1 OF 3
255	M20.702	TYPE I TYPICAL STATION ELECTRONICS DETAILS 2 OF 3
256	M20.704	TYPE I TYPICAL STATION ELECTRONICS DETAILS 3 OF 3
257	M20.709	TYPICAL STATION UTILITY YARD CEC DETAILS
258	M20.710	TYPICAL STATION DETAILS 1 OF 4
259	M20.711	TYPICAL STATION DETAILS 2 OF 4
260	M20.712	TYPICAL STATION DETAILS 3 OF 4
261	M20.713	TYPICAL STATION DETAILS 4 OF 4
262	M20.714	TYPICAL MOUNTING DETAIL
~~263~~	~~C30.0501~~	~~DRAINAGE MAP~~
~~264~~	~~C30.0502~~	~~DRAINAGE MAP~~
~~265~~	~~C30.0503~~	~~DRAINAGE MAP~~
~~266~~	~~C30.0504~~	~~DRAINAGE MAP~~
~~267~~	~~C30.0505~~	~~DRAINAGE MAP~~
~~268~~	~~C30.0506~~	~~DRAINAGE MAP~~
~~269~~	~~C30.0507~~	~~DRAINAGE MAP~~
~~270~~	~~C30.0508~~	~~DRAINAGE MAP~~
~~271~~	~~C30.0509~~	~~DRAINAGE MAP~~
~~272~~	~~C30.0510~~	~~DRAINAGE MAP~~
~~273~~	~~C30.0511~~	~~DRAINAGE MAP~~
~~274~~	~~C30.0512~~	~~DRAINAGE MAP~~
~~275~~	~~C30.0513~~	~~DRAINAGE MAP~~
~~276~~	~~C30.0514~~	~~DRAINAGE MAP~~
~~277~~	~~C30.0515~~	~~DRAINAGE MAP~~
~~278~~	~~C30.0516~~	~~DRAINAGE MAP~~
~~279~~	~~C30.0517~~	~~DRAINAGE MAP~~
~~280~~	~~C30.0518~~	~~DRAINAGE MAP~~
~~281~~	~~C30.0519~~	~~DRAINAGE MAP~~
~~282~~	~~C30.0520~~	~~MP 800.6 BRIDGE HYDRAULIC RECOMMENDATION SHEET~~
~~283~~	~~C30.0520A~~	~~MP 811.3 BRIDGE HYDRAULIC RECOMMENDATION SHEET~~
~~284~~	~~C30.0521~~	~~SUMMARY OF DRAINAGE STRUCTURES~~
~~285~~	~~C30.0522~~	~~SUMMARY OF DRAINAGE STRUCTURES~~
~~286~~	~~C30.0523~~	~~SUMMARY OF DRAINAGE STRUCTURES~~
~~287~~	~~C30.0524~~	~~SUMMARY OF DRAINAGE STRUCTURES~~
~~288~~	~~C30.0525~~	~~SUMMARY OF DRAINAGE STRUCTURES~~
~~289~~	~~C30.0527~~	~~SUMMARY OF DRAINAGE STRUCTURES~~
~~290~~	~~C30.0528~~	~~OPTIONAL MATERIALS SYSTEMS~~
~~291~~	~~C30.0530~~	~~DRAINAGE DETAILS~~
~~292~~	~~C30.0531~~	~~DRAINAGE DETAILS~~
~~293~~	~~T00.002~~	~~PROJECT LAYOUT~~
~~294~~	~~T00.003~~	~~PROJECT LAYOUT~~
~~295~~	~~T00.004~~	~~PROJECT LAYOUT~~
~~296~~	~~T00.005~~	~~PROJECT LAYOUT~~
~~297~~	~~T00.006~~	~~PROJECT LAYOUT~~
~~298~~	~~T00.007~~	~~PROJECT LAYOUT~~
~~299~~	~~T00.008~~	~~PROJECT LAYOUT~~
~~300~~	~~T00.009~~	~~TRACK CHARTS~~
~~301~~	~~T00.010~~	~~TRACK CHARTS~~
~~302~~	~~T00.011~~	~~TRACK CHARTS~~
~~303~~	~~T00.012~~	~~TRACK CHARTS~~
~~304~~	~~T00.013~~	~~TRACK CHARTS~~
~~305~~	~~T00.014~~	~~TRACK CHARTS~~
~~306~~	~~T30.0201~~	~~CURVE DATA TABLE~~
~~307~~	~~T30.0202~~	~~CURVE DATA TABLE~~
~~308~~	~~T30.0203~~	~~CURVE DATA TABLE~~
~~309~~	~~T30.0204~~	~~CURVE DATA TABLE~~
~~310~~	~~T30.0204A~~	~~CURVE DATA TABLE~~
~~311~~	~~T30.0204B~~	~~TURNOUT/CROSSOVER DATA TABLE~~
~~312~~	~~T30.0205~~	~~PLAN AND PROFILE~~
~~313~~	~~T30.0206~~	~~PLAN AND PROFILE~~
~~314~~	~~T30.0207~~	~~PLAN AND PROFILE~~
~~315~~	~~T30.0208~~	~~PLAN AND PROFILE~~
~~316~~	~~T30.0209~~	~~PLAN AND PROFILE~~
~~317~~	~~T30.0210~~	~~PLAN AND PROFILE~~
~~318~~	~~T30.0211~~	~~PLAN AND PROFILE~~
~~319~~	~~T30.0212~~	~~PLAN AND PROFILE~~
~~320~~	~~T30.0213~~	~~PLAN AND PROFILE~~
~~321~~	~~T30.0214~~	~~PLAN AND PROFILE~~
~~322~~	~~T30.0215~~	~~PLAN AND PROFILE~~
~~323~~	~~T30.0216~~	~~PLAN AND PROFILE~~
~~324~~	~~T30.0217~~	~~PLAN AND PROFILE~~
~~325~~	~~T30.0218~~	~~PLAN AND PROFILE~~
~~326~~	~~T30.0219~~	~~PLAN AND PROFILE~~
~~327~~	~~T30.0220~~	~~PLAN AND PROFILE~~
~~328~~	~~T30.0221~~	~~PLAN AND PROFILE~~
~~329~~	~~T30.0222~~	~~PLAN AND PROFILE~~
~~330~~	~~T30.0223~~	~~PLAN AND PROFILE~~
~~331~~	~~T30.0224~~	~~PLAN AND PROFILE~~
~~332~~	~~T30.0225~~	~~PLAN AND PROFILE~~
~~333~~	~~T30.0226~~	~~PLAN AND PROFILE~~
~~334~~	~~T30.0227~~	~~PLAN AND PROFILE~~
~~335~~	~~T30.0228~~	~~PLAN AND PROFILE~~
~~336~~	~~T30.0229~~	~~PLAN AND PROFILE~~
~~337~~	~~T30.0230~~	~~PLAN AND PROFILE~~
~~338~~	~~T30.0231~~	~~PLAN AND PROFILE~~
~~339~~	~~T30.0232~~	~~PLAN AND PROFILE~~
~~340~~	~~T30.0233~~	~~PLAN AND PROFILE~~
~~341~~	~~T30.0234~~	~~PLAN AND PROFILE~~
~~342~~	~~T30.0235~~	~~PLAN AND PROFILE~~
~~343~~	~~T30.0236~~	~~PLAN AND PROFILE~~
~~344~~	~~T30.0237~~	~~PLAN AND PROFILE~~
~~345~~	~~T30.0238~~	~~PLAN AND PROFILE~~
~~346~~	~~T30.0239~~	~~PLAN AND PROFILE~~

NOTICE: THE OFFICIAL RECORD OF THIS SHEET IS THE ELECTRONIC FILE SIGNED AND SEALED UNDER RULE 61G15-23.003, F.A.C.

REVISIONS

DATE	BY	DESCRIPTION	DATE	BY	DESCRIPTION

TRANSPORTATION
AECOM TECHNICAL SERVICES, Inc.
300 Colonial Center Pkwy, Suite 130
Lake Mary, FL. 32746
T 407.549.4200 F 407.549.4201
Certificate of Authorization No. 8115
DAVID S. BURWELL PE NO. 55853 www.aecom.com

STATE OF FLORIDA
DEPARTMENT OF TRANSPORTATION

ROAD NO.	COUNTY	FINANCIAL PROJECT ID
CFRC P2S	VARIOUS	423446-9-52-01

CENTRAL FLORIDA COMMUTER RAIL TRANSIT (CFCRT) PHASE 2 SOUTH

INDEX OF SHEETS

SHEET NO. 4

SHEET NO.	DRAWING NO.	TITLE
347	T30.0240	PLAN AND PROFILE
348	T30.0241	PLAN AND PROFILE
349	T30.0242	PLAN AND PROFILE
350	T30.0243	PLAN AND PROFILE
351	T30.0244	PLAN AND PROFILE
352	T30.0245	PLAN AND PROFILE
353	T30.0246	PLAN AND PROFILE
354	T30.0247	PLAN AND PROFILE
355	T30.0248	PLAN AND PROFILE
356	T30.0249	PLAN AND PROFILE
357	T30.0250	PLAN AND PROFILE
358	T30.0251	PLAN AND PROFILE
359	T30.0252	PLAN AND PROFILE
360	T30.0253	PLAN AND PROFILE
361	T30.0254	PLAN AND PROFILE
362	T30.0255	PLAN AND PROFILE
363	T30.0256	PLAN AND PROFILE
364	T30.0257	PLAN AND PROFILE
365	T30.0258	PLAN AND PROFILE
366	T30.0259	PLAN AND PROFILE
367	T30.0260	PLAN AND PROFILE
368	T30.0261	PLAN AND PROFILE
369	T30.0262	PLAN AND PROFILE
370	T30.0263	PLAN AND PROFILE
371	T30.0264	PLAN AND PROFILE
372	T30.0265	PLAN AND PROFILE
373	T30.0266	PLAN AND PROFILE
374	T30.0267	PLAN AND PROFILE
375	T30.0268	PLAN AND PROFILE
376	T30.0269	PLAN AND PROFILE
377	C30.0532	DRAINAGE PLAN AND PROFILE
378	C30.0533	DRAINAGE PLAN AND PROFILE
379	C30.0534	DRAINAGE PLAN AND PROFILE
380	C30.0535	DRAINAGE PLAN AND PROFILE
381	C30.0536	DRAINAGE PLAN AND PROFILE
382	C30.0537	DRAINAGE PLAN AND PROFILE
383	C30.0538	DRAINAGE PLAN AND PROFILE
384	C30.0539	DRAINAGE PLAN AND PROFILE
385	C30.0540	DRAINAGE PLAN AND PROFILE
386	C30.0541	DRAINAGE PLAN AND PROFILE
387	C30.0542	DRAINAGE PLAN AND PROFILE
388	C30.0543	DRAINAGE PLAN AND PROFILE
389	C30.0544	DRAINAGE PLAN AND PROFILE
390	C30.0545	DRAINAGE PLAN AND PROFILE
391	C30.0546	DRAINAGE PLAN AND PROFILE
392	C30.0547	DRAINAGE PLAN AND PROFILE
393	C30.0548	DRAINAGE PLAN AND PROFILE
394	C30.0549	DRAINAGE PLAN AND PROFILE
395	C30.0550	DRAINAGE PLAN AND PROFILE
396	C30.0551	DRAINAGE PLAN AND PROFILE
397	C30.0552	DRAINAGE PLAN AND PROFILE
398	C30.0553	DRAINAGE PLAN AND PROFILE
399	C30.0554	DRAINAGE PLAN AND PROFILE
400	C30.0555	DRAINAGE PLAN AND PROFILE
401	C30.0556	DRAINAGE PLAN AND PROFILE
402	C30.0557	DRAINAGE PLAN AND PROFILE
403	C30.0558	DRAINAGE PLAN AND PROFILE
404	C30.0559	DRAINAGE PLAN AND PROFILE
405	C30.0560	DRAINAGE PLAN AND PROFILE
406	C30.0561	DRAINAGE PLAN AND PROFILE
407	C30.0562	DRAINAGE PLAN AND PROFILE
408	C30.0563	DRAINAGE PLAN AND PROFILE
409	C30.0564	DRAINAGE PLAN AND PROFILE
410	C30.0565	DRAINAGE PLAN AND PROFILE
411	C30.0566	DRAINAGE PLAN AND PROFILE
412	C30.0567	DRAINAGE PLAN AND PROFILE
413	C30.0568	DRAINAGE PLAN AND PROFILE
414	C30.0569	DRAINAGE PLAN AND PROFILE
415	C30.0570	DRAINAGE PLAN AND PROFILE
416	C30.0571	DRAINAGE PLAN AND PROFILE
417	C30.0572	DRAINAGE PLAN AND PROFILE
418	C30.0573	DRAINAGE PLAN AND PROFILE
419	C30.0574	DRAINAGE PLAN AND PROFILE
420	C30.0575	DRAINAGE PLAN AND PROFILE
421	C30.0576	DRAINAGE PLAN AND PROFILE
422	C30.0577	DRAINAGE PLAN AND PROFILE
423	C30.0578	DRAINAGE PLAN AND PROFILE
424	C30.0579	DRAINAGE PLAN AND PROFILE
425	C30.0580	DRAINAGE PLAN AND PROFILE
426	C30.0581	DRAINAGE PLAN AND PROFILE
427	C30.0582	DRAINAGE PLAN AND PROFILE
428	C30.0583	DRAINAGE PLAN AND PROFILE
429	C30.0584	DRAINAGE PLAN AND PROFILE
430	C30.0585	DRAINAGE PLAN AND PROFILE
431	C30.0586	DRAINAGE PLAN AND PROFILE
432	C30.0587	DRAINAGE PLAN AND PROFILE
433	C30.0588	DRAINAGE PLAN AND PROFILE
434	C30.0589	DRAINAGE PLAN AND PROFILE
435	C30.0590	DRAINAGE PLAN AND PROFILE
436	C30.0591	DRAINAGE PLAN AND PROFILE
437	C30.0592	DRAINAGE PLAN AND PROFILE
438	C30.0593	DRAINAGE PLAN AND PROFILE
439	C30.0594	DRAINAGE PLAN AND PROFILE
440	C30.0595	DRAINAGE PLAN AND PROFILE
441	C30.0596	DRAINAGE PLAN AND PROFILE
442	T30.0401A	MP 797.70 LANDSTREET RD GRADE CROSSING DETAIL
443	T30.0401B	MP 797.70 LANDSTREET RD GRADE CROSSING PROFILE
444	T30.0401C	MP 797.70 LANDSTREET RD ROADWAY CROSS SECTION
445	T30.0766	MP 797.70 LANDSTREET RD UTILITY ADJUSTMENTS
446	T30.0401D	MP 797.70 LANDSTREET RD TRAFFIC CONTROL PLAN
447	T30.0402A	MP 797.94 PINE ST TYPICAL SECTION
448	T30.0402B	MP 797.94 PINE ST GRADE CROSSING DETAIL
449	T30.0402C	MP 797.94 PINE ST GRADE CROSSING PROFILE
450	T30.0402D	MP 797.94 PINE ST ROADWAY CROSS SECTIONS
451	T30.0402E	MP 797.94 PINE ST ROADWAY CROSS SECTIONS
452	T30.0767	MP 797.94 PINE ST UTILITY ADJUSTMENTS
453	T30.0402F	MP 797.94 PINE ST SIGNING AND MARKING PLAN
454	T30.0402G	MP 797.94 PINE ST TRAFFIC CONTROL PLAN
455	T30.0403A	MP 798.24 4TH ST TYPICAL SECTION
456	T30.0403B	MP 798.24 4TH ST GRADE CROSSING DETAIL
457	T30.0403C	MP 798.24 4TH ST GRADE CROSSING PROFILE
458	T30.0403D	MP 798.24 4TH ST ROADWAY CROSS SECTION
459	T30.0768	MP 798.24 4TH ST UTILITY ADJUSTMENTS
460	T30.0403E	MP798.24 4TH ST SIGNING AND MARKING PLAN
461	T30.0403F	MP 798.24 4TH ST TRAFFIC CONTROL PLAN
462	T30.0404A	MP 798.75 TAFT VINELAND RD GRADE CROSSING DETAIL

NOTICE: THE OFFICIAL RECORD OF THIS SHEET IS THE ELECTRONIC FILE SIGNED AND SEALED UNDER RULE 6G15-23.003, F.A.C.

REVISIONS					
DATE	BY	DESCRIPTION	DATE	BY	DESCRIPTION

TRANSPORTATION
AECOM TECHNICAL SERVICES, Inc.
300 Colonial Center Pkwy, Suite 130
Lake Mary, FL. 32746
T 407.549.4200 F 407.549.4201
Certificate of Authorization No. 8115
DAVID S. BURWELL PE NO. 55853 www.aecom.com

STATE OF FLORIDA
DEPARTMENT OF TRANSPORTATION

ROAD NO.	COUNTY	FINANCIAL PROJECT ID
CFRC P2S	VARIOUS	423446-9-52-01

CENTRAL FLORIDA COMMUTER RAIL TRANSIT (CFCRT) PHASE 2 SOUTH

INDEX OF SHEETS

SHEET NO. 5

DRAWING NO.
C00.00IF

SHEET NO.	DRAWING NO.	TITLE
463	T30.0404B	MP 798.75 TAFT-VINELAND RD GRADE CROSSING PROFILE
464	T30.0404C	MP 798.75 TAFT-VINELAND RD ROADWAY CROSS SECTION
465	T30.0404D	MP 798.75 TAFT-VINELAND RD ROADWAY CROSS SECTION
466	T30.0404E	MP 798.75 TAFT-VINELAND RD ROADWAY CROSS SECTION
467	T30.0769	MP 798.75 TAFT-VINELAND RD UTILITY ADJUSTMENTS
468	T30.0404F	MP 798.75 TAFT-VINELAND RD TRAFFIC CONTROL PLAN
469	T30.0405A	MP 800.77 WETHERBEE RD TYPICAL SECTION
470	T30.0405B	MP 800.77 WETHERBEE RD TYPICAL SECTION
471	T30.0405C	MP 800.77 WETHERBEE RD GRADE CROSSING DETAIL
472	T30.0405D	MP 800.77 WETHERBEE RD GRADE CROSSING PROFILE
473	T30.0405E	MP 800.77 WETHERBEE RD ROADWAY CROSS SECTION
474	T30.0405F	MP 800.77 WETHERBEE RD ROADWAY CROSS SECTION
475	T30.0405G	MP 800.77 WETHERBEE RD ROADWAY CROSS SECTION
476	T30.0770	MP 800.77 WETHERBEE RD UTILITY ADJUSTMENTS
477	T30.0405H	MP 800.77 WETHERBEE RD SIGNING AND MARKING PLAN
478	T30.0405I	MP 800.77 WETHERBEE RD TRAFFIC CONTROL PLAN
479	T30.0405J	MP 800.77 WETHERBEE RD TRAFFIC CONTROL PLAN
480	T30.0406A	MP 801.15 FAIRWAY WOODS TYPICAL SECTION
481	T30.0406B	MP 801.15 FAIRWAY WOODS GRADE CROSSING DETAIL
482	T30.0406C	MP 801.15 FAIRWAY WOODS GRADE CROSSING PROFILE
483	T30.0406D	MP 801.15 FAIRWAY WOODS ROADWAY CROSS SECTION
484	T30.0406E	MP 801.15 FAIRWAY WOODS ROADWAY CROSS SECTION
485	T30.0771	MP 801.15 FAIRWAY WOODS UTILITY ADJUSTMENTS
486	T30.0406F	MP 801.15 FAIRWAY WOODS SIGNING AND MARKING PLAN
487	T30.0406G	MP 801.15 FAIRWAY WOODS TRAFFIC CONTROL PLAN
488	T30.0407A	MP 805.08 GARDEN ST TYPICAL SECTION
489	T30.0407B	MP 805.08 GARDEN ST GRADE CROSSING DETAIL
490	T30.0407C	MP 805.08 GARDEN ST GRADE CROSSING PROFILE
491	T30.0407D	MP 805.08 GARDEN ST ROADWAY CROSS SECTION
492	T30.0407E	MP 805.08 GARDEN ST ROADWAY CROSS SECTION
493	T30.0772	MP 805.08 GARDEN ST UTILITY ADJUSTMENTS
494	T30.0407F	MP 805.08 GARDEN ST SIGNING AND MARKING PLAN
495	T30.0407G	MP 805.08 GARDEN ST TRAFFIC CONTROL PLAN
496	T30.0408A	MP 805.70 CARROLL ST TYPICAL SECTION
497	T30.0408B	MP 805.70 CARROLL ST GRADE CROSSING DETAIL
498	T30.0408C	MP 805.70 CARROLL ST GRADE CROSSING PROFILE
499	T30.0408D	MP 805.70 CARROLL ST ROADWAY CROSS SECTION
500	T30.0408E	MP 805.70 CARROLL ST ROADWAY CROSS SECTION
501	T30.0773	MP 805.70 CARROLL ST GRADE UTILITY ADJUSTMENT
502	T30.0408F	MP 805.70 CARROLL ST SIGNING AND MARKING PLAN
503	T30.0408G	MP 805.70 CARROLL ST TRAFFIC CONTROL PLAN
504	T30.0409A	MP 806.22 E DONEGAN AVE TYPICAL SECTION
505	T30.0409B	MP 806.22 E DONEGAN AVE GRADE CROSSING DETAIL
506	T30.0409C	MP 806.22 E DONEGAN AVE GRADE CROSSING PROFILE
507	T30.0409D	MP 806.22 E DONEGAN AVE ROADWAY CROSS SECTION
508	T30.0774	MP 806.22 E DONEGAN AVE UTILITY ADJUSTMENTS
509	T30.0409E	MP 806.22 E DONEGAN AVE SIGNING AND MARKING PLAN
510	T30.0409F	MP 806.22 E DONEGAN AVE TRAFFIC CONTROL PLAN
511	T30.0410A	MP 807.23 SR 500 TYPICAL SECTION
512	T30.0410B	MP 807.23 SR 500 GRADE CROSSING DETAIL
513	T30.0410C	MP 807.23 SR 500 GRADE CROSSING PROFILE
514	T30.0410D	MP 807.23 SR 500 ROADWAY CROSS SECTION
515	T30.0410E	MP 807.23 SR 500 ROADWAY CROSS SECTION
516	T30.0775	MP 807.23 SR 500 ROADWAY UTILITY ADJUSTMENTS
517	T30.0410F	MP 807.23 SR 500 SIGNING AND MARKING PLAN
518	T30.0410G	MP 807.23 SR 500 TRAFFIC CONTROL PLAN
519	T30.0410H	MP 807.23 SR 500 TRAFFIC CONTROL PLAN
520	T30.0411A	MP 807.43 E MAGNOLIA ST TYPICAL SECTION
521	T30.0411B	MP 807.43 E MAGNOLIA ST GRADE CROSSING DETAIL
522	T30.0411C	MP 807.43 E MAGNOLIA ST GRADE CROSSING PROFILE
523	T30.0411D	MP 807.43 E MAGNOLIA ST ROADWAY CROSS SECTION
524	T30.0411E	MP 807.43 E MAGNOLIA ST ROADWAY CROSS SECTION
525	T30.0776	MP 807.43 E MAGNOLIA ST UTILITY ADJUSTMENTS
526	T30.0411F	MP 807.43 E MAGNOLIA ST SIGNING AND MARKING PLAN
527	T30.0411G	MP 807.43 E MAGNOLIA ST TRAFFIC CONTROL PLAN
528	T30.0412A	MP 807.55 OAK ST TYPICAL SECTION
529	T30.0412B	MP 807.55 OAK ST GRADE CROSSING DETAIL
530	T30.0412C	MP 807.55 OAK ST GRADE CROSSING PROFILE
531	T30.0412D	MP 807.55 OAK ST ROADWAY CROSS SECTION
532	T30.0412E	MP 807.55 OAK ST ROADWAY CROSS SECTION
533	T30.0412F	MP 807.55 OAK ST ROADWAY CROSS SECTION
534	T30.0412G	MP 807.55 OAK ST ROADWAY CROSS SECTION
535	T30.0777	MP 807.55 OAK ST UTILITY ADJUSTMENTS
536	T30.0412H	MP 807.55 OAK ST SIGNING AND MARKING PLAN
537	T30.0412I	MP 807.55 OAK ST TRAFFIC CONTROL PLAN
538	T30.0413A	MP 807.70 PARK ST TYPICAL SECTION
539	T30.0413B	MP 807.70 PARK ST GRADE CROSSING DETAIL
540	T30.0413C	MP 807.70 PARK ST GRADE CROSSING PROFILE
541	T30.0413D	MP 807.70 PARK ST ROADWAY CROSS SECTION
542	T30.0413E	MP 807.70 PARK ST ROADWAY CROSS SECTION
543	T30.0413F	MP 807.70 PARK ST ROADWAY CROSS SECTION
544	T30.0413G	MP 807.70 PARK ST ROADWAY CROSS SECTION
545	T30.0413H	MP 807.70 PARK ST ROADWAY CROSS SECTION
546	T30.0413I	MP 807.70 PARK ST ROADWAY CROSS SECTION
547	T30.0778	MP 807.70 PARK ST UTILITY ADJUSTMENTS
548	T30.0413J	MP 807.70 PARK ST SIGNING AND MARKING PLAN
549	T30.0413K	MP 807.70 PARK ST TRAFFIC CONTROL PLAN
550	T30.0414A	MP 807.94 E. DRURY AVE TYPICAL SECTION
551	T30.0414B	MP 807.94 E. DRURY AVE GRADE CROSSING DETAIL
552	T30.0414C	MP 807.94 E. DRURY AVE GRADE CROSSING PROFILE
553	T30.0414D	MP 807.94 E. DRURY AVE ROADWAY CROSS SECTION
554	T30.0414E	MP 807.94 E. DRURY AVE ROADWAY CROSS SECTION
555	T30.0414F	MP 807.94 E. DRURY AVE ROADWAY CROSS SECTION
556	T30.0414G	MP 807.94 E. DRURY AVE ROADWAY CROSS SECTION
557	T30.0779	MP 807.94 E. DRURY AVE UTILITY ADJUSTMENTS
558	T30.0414H	MP 807.94 E. DRURY AVE SIGNING AND MARKING PLAN
559	T30.0414I	MP 807.94 E. DRURY AVE TRAFFIC CONTROL PLAN
560	T30.0415A	MP 808.07 E DAKIN AVE TYPICAL SECTION
561	T30.0415B	MP 808.07 E DAKIN AVE GRADE CROSSING DETAIL
562	T30.0415C	MP 808.07 E DAKIN AVE GRADE CROSSING PROFILE
563	T30.0415D	MP 808.07 E DAKIN AVE ROADWAY CROSS SECTION
564	T30.0415E	MP 808.07 E DAKIN AVE ROADWAY CROSS SECTION
565	T30.0780	MP 808.07 E DAKIN AVE UTILITY ADJUSTMENTS
566	T30.0415F	MP 808.07 E DAKIN AVE SIGNING AND MARKING PLAN
567	T30.0415G	MP 808.07 E DAKIN AVE TRAFFIC CONTROL PLAN
568	T30.0416A	MP 808.15 E MONUMENT AVE TYPICAL SECTION
569	T30.0416B	MP 808.15 E MONUMENT AVE GRADE CROSSING DETAIL
570	T30.0416C	MP 808.15 E MONUMENT AVE GRADE CROSSING PROFILE
571	T30.0416D	MP 808.15 E MONUMENT AVE ROADWAY CROSS SECTION
572	T30.0416E	MP 808.15 E MONUMENT AVE ROADWAY CROSS SECTION
573	T30.0781	MP 808.15 E MONUMENT AVE UTILITY ADJUSTMENTS
574	T30.0416F	MP 808.15 E MONUMENT AVE SIGNING AND MARKING PLAN
575	T30.0416G	MP 808.15 E MONUMENT AVE TRAFFIC CONTROL PLAN
576	T30.0417A	MP 808.22 MEMORIAL WALKWAY DEMOLITION PLAN
577	T30.0418A	MP 808.28 RUBY AVE TYPICAL SECTION
578	T30.0418B	MP 808.28 RUBY AVE GRADE CROSSING DETAIL

NOTICE: THE OFFICIAL RECORD OF THIS SHEET IS THE ELECTRONIC FILE SIGNED AND SEALED UNDER RULE 61G15-23.003, F.A.C.

REVISIONS					
DATE	BY	DESCRIPTION	DATE	BY	DESCRIPTION

TRANSPORTATION
AECOM TECHNICAL SERVICES, Inc.
300 Colonial Center Pkwy, Suite 130
Lake Mary, FL. 32746
T 407.549.4200 F 407.549.4201
Certificate of Authorization No. 8115
DAVID S. BURWELL PE NO. 55853 www.aecom.com

STATE OF FLORIDA
DEPARTMENT OF TRANSPORTATION

ROAD NO.	COUNTY	FINANCIAL PROJECT ID
CFRC P2S	VARIOUS	423446-9-52-01

CENTRAL FLORIDA COMMUTER RAIL TRANSIT (CFCRT) PHASE 2 SOUTH

INDEX OF SHEETS

SHEET NO. 6

SHEET NO.	DRAWING NO.	TITLE
579	T30.04I8C	MP 808.28 RUBY AVE GRADE CROSSING PROFILE
580	T30.04I8D	MP 808.28 RUBY AVE ROADWAY CROSS SECTION
58I	T30.04I8E	MP 808.28 RUBY AVE ROADWAY CROSS SECTION
582	T30.04I8F	MP 808.28 RUBY AVE ROADWAY CROSS SECTION
583	T30.0782	MP 808.28 RUBY AVE UTILITY ADJUSTMENTS
584	T30.04I8G	MP 808.28 RUBY AVE SIGNING AND MARKING PLAN
585	T30.04I8H	MP 808.28 RUBY AVE TRAFFIC CONTROL PLAN
586	T30.04I9A	MP 808.52 BEAUMONT AVE TYPICAL SECTION
587	T30.04I9B	MP 808.52 BEAUMONT AVE GRADE CROSSING DETAIL
588	T30.04I9C	MP 808.52 BEAUMONT AVE GRADE CROSSING PROFILE
589	T30.0784	MP 808 BEAUMONT AVE UTILITY ADJUSTMENTS
590	T30.04I9D	MP 808.52 BEAUMONT AVE SIGNING AND MARKING PLAN
59I	T30.0420A	MP 808.6I VERNON RD DEMOLITION PLAN
592	T30.042IA	MP 808.77 LAKESHORE BLVD DEMOLITION PLAN
593	T30.0422A	MP 808.77 CLYDE AVE TYPICAL SECTION
594	T30.0422B	MP 808.77 CLYDE AVE GRADE CROSSING DETAIL
595	T30.0422C	MP 808.77 CLYDE AVE GRADE CROSSING PROFILE
596	T30.0422D	MP 808.77 CLYDE AVE ROADWAY CROSS SECTIONS
597	T30.0422E	MP 808.77 CLYDE AVE ROADWAY CROSS SECTIONS
598	T30.0783	MP 808.77 CLYDE AVE UTILITY ADJUSTMENTS
599	T30.0422H	MP 808.77 CLYDE AVE SIGNING AND MARKING PLAN
600	T30.0422I	MP 808.77 CLYDE AVE TRAFFIC CONTROL PLAN
60I	T30.0423A	MP 8I0.45 CR 53I TYPICAL SECTION
602	T30.0423B	MP 8I0.45 CR 53I GRADE CROSSING DETAIL
603	T30.0423C	MP 8I0.45 CR 53I GRADE CROSSING PROFILE
604	T30.0423D	MP 8I0.45 CR 53I ROADWAY CROSS SECTION
605	T30.0423E	MP 8I0.45 CR 53I ROADWAY CROSS SECTION
606	T30.0423F	MP 8I0.45 CR 53I ROADWAY CROSS SECTION
607	T30.0785	MP 8I0.45 CR 53I UTILITY ADJUSTMENTS
608	T30.0423G	MP 8I0.45 CR 53I SIGNING AND MARKING PLAN
609	T30.0423H	MP 8I0.45 CR 53I TRAFFIC CONTROL PLAN
6I0	T30.0424A	MP 8I2.I6 CRESTRIDGE DR TYPICAL SECTION
6II	T30.0424B	MP 8I2.I6 CRESTRIDGE DR GRADE CROSSING DETAIL
6I2	T30.0424C	MP 8I2.I6 CRESTRIDGE DR GRADE CROSSING PROFILE
6I3	T30.0424D	MP 8I2.I6 CRESTRIDGE DR ROADWAY CROSS SECTION
6I4	T30.0786	MP 8I2.I6 CRESTRIDGE DR UTILITY ADJUSTMENTS
6I5	T30.0424E	MP 8I2.I6 CRESTRIDGE SIGNING AND MARKING PLAN
6I6	T30.0424F	MP 8I2.I6 CRESTRIDGE TRAFFIC CONTROL PLAN
6I7	T30.0425A	MP 8I3.77 POINCIANA BLVD GRADE CROSSING DETAIL
6I8	T30.0787	MP 8I3.77 POINCIANA BLVD UTILITY ADJUSTMENTS
6I9	C30.080I	SOIL SURVEY
620	T30.600I	CROSS SECTIONS
62I	T30.6002	CROSS SECTIONS
622	T30.6003	CROSS SECTIONS
623	T30.6004	CROSS SECTIONS
624	T30.6005	CROSS SECTIONS
625	T30.6006	CROSS SECTIONS
626	T30.6007	CROSS SECTIONS
627	T30.6008	CROSS SECTIONS
628	T30.6009	CROSS SECTIONS
629	T30.60I0	CROSS SECTIONS
630	T30.60II	CROSS SECTIONS
63I	T30.60I2	CROSS SECTIONS
632	T30.60I3	CROSS SECTIONS
633	T30.60I4	CROSS SECTIONS
634	T30.60I5	CROSS SECTIONS
635	T30.60I6	CROSS SECTIONS
636	T30.60I7	CROSS SECTIONS
637	T30.60I8	CROSS SECTIONS
638	T30.60I9	CROSS SECTIONS
639	T30.6020	CROSS SECTIONS
640	T30.602I	CROSS SECTIONS
64I	T30.6022	CROSS SECTIONS
642	T30.6023	CROSS SECTIONS
643	T30.6024	CROSS SECTIONS
644	T30.6025	CROSS SECTIONS
645	T30.6026	CROSS SECTIONS
646	T30.6027	CROSS SECTIONS
647	T30.6028	CROSS SECTIONS
648	T30.6029	CROSS SECTIONS
649	T30.6030	CROSS SECTIONS
650	T30.603I	CROSS SECTIONS
65I	T30.6032	CROSS SECTIONS
652	T30.6033	CROSS SECTIONS
653	T30.6034	CROSS SECTIONS
654	T30.6035	CROSS SECTIONS
655	T30.6036	CROSS SECTIONS
656	T30.6037	CROSS SECTIONS
657	T30.6038	CROSS SECTIONS
658	T30.6039	CROSS SECTIONS
659	T30.6040	CROSS SECTIONS
660	T30.604I	CROSS SECTIONS
66I	T30.6042	CROSS SECTIONS
662	T30.6043	CROSS SECTIONS
663	T30.6044	CROSS SECTIONS
664	T30.6045	CROSS SECTIONS
665	T30.6046	CROSS SECTIONS
666	T30.6047	CROSS SECTIONS
667	T30.6048	CROSS SECTIONS
668	T30.6049	CROSS SECTIONS
669	T30.6050	CROSS SECTIONS
670	T30.605I	CROSS SECTIONS
67I	T30.6052	CROSS SECTIONS
672	T30.6053	CROSS SECTIONS
673	T30.6054	CROSS SECTIONS
674	T30.6055	CROSS SECTIONS
675	T30.6056	CROSS SECTIONS
676	T30.6057	CROSS SECTIONS
677	T30.6058	CROSS SECTIONS
678	T30.6059	CROSS SECTIONS
679	T30.6060	CROSS SECTIONS
680	T30.606I	CROSS SECTIONS
68I	T30.6062	CROSS SECTIONS
682	T30.6063	CROSS SECTIONS
683	T30.6064	CROSS SECTIONS
684	T30.6065	CROSS SECTIONS
685	T30.6066	CROSS SECTIONS
686	T30.6067	CROSS SECTIONS
687	T30.6068	CROSS SECTIONS
688	T30.6069	CROSS SECTIONS
689	T30.6070	CROSS SECTIONS
690	T30.607I	CROSS SECTIONS
69I	T30.6072	CROSS SECTIONS
692	T30.6073	CROSS SECTIONS
693	T30.6074	CROSS SECTIONS
694	T30.6075	CROSS SECTIONS

NOTICE: THE OFFICIAL RECORD OF THIS SHEET IS THE ELECTRONIC FILE SIGNED AND SEALED UNDER RULE 6GI5-23.003, F.A.C.

REVISIONS

DATE	BY	DESCRIPTION	DATE	BY	DESCRIPTION

TRANSPORTATION
AECOM TECHNICAL SERVICES, Inc.
300 Colonial Center Pkwy, Suite 130
Lake Mary, FL. 32746
T 407.549.4200 F 407.549.4201
Certificate of Authorization No. 8115
DAVID S. BURWELL PE NO. 55853 www.aecom.com

STATE OF FLORIDA
DEPARTMENT OF TRANSPORTATION

ROAD NO.	COUNTY	FINANCIAL PROJECT ID
CFRC P2S	VARIOUS	423446-9-52-0I

CENTRAL FLORIDA COMMUTER RAIL TRANSIT (CFCRT) PHASE 2 SOUTH

INDEX OF SHEETS

SHEET NO. 7

DRAWING NO.
C00.001H

SHEET NO.	DRAWING NO.	TITLE
695	T30.6076	CROSS SECTIONS
696	T30.6077	CROSS SECTIONS
697	T30.6078	CROSS SECTIONS
698	T30.6079	CROSS SECTIONS
699	T30.6080	CROSS SECTIONS
700	T30.6081	CROSS SECTIONS
701	T30.6082	CROSS SECTIONS
702	T30.6083	CROSS SECTIONS
703	T30.6084	CROSS SECTIONS
704	T30.6085	CROSS SECTIONS
705	T30.6086	CROSS SECTIONS
706	T30.6087	CROSS SECTIONS
707	T30.6088	CROSS SECTIONS
708	T30.6089	CROSS SECTIONS
709	T30.6090	CROSS SECTIONS
710	T30.6091	CROSS SECTIONS
711	T30.6092	CROSS SECTIONS
712	T30.6093	CROSS SECTIONS
713	T30.6094	CROSS SECTIONS
714	T30.6095	CROSS SECTIONS
715	T30.6096	CROSS SECTIONS
716	T30.6097	CROSS SECTIONS
717	T30.6098	CROSS SECTIONS
718	T30.6099	CROSS SECTIONS
719	T30.6100	CROSS SECTIONS
720	T30.6101	CROSS SECTIONS
721	T30.6102	CROSS SECTIONS
722	T30.6103	CROSS SECTIONS
723	T30.6104	CROSS SECTIONS
724	T30.6105	CROSS SECTIONS
725	T30.6106	CROSS SECTIONS
726	T30.6107	CROSS SECTIONS
727	T30.6108	CROSS SECTIONS
728	T30.6109	CROSS SECTIONS
729	T30.6110	CROSS SECTIONS
730	T30.6111	CROSS SECTIONS
731	T30.6112	CROSS SECTIONS
732	T30.6113	CROSS SECTIONS
733	T30.6114	CROSS SECTIONS
734	T30.6115	CROSS SECTIONS
735	T30.6116	CROSS SECTIONS
736	T30.6117	CROSS SECTIONS
737	T30.6118	CROSS SECTIONS
738	T30.6119	CROSS SECTIONS
739	T30.6120	CROSS SECTIONS
740	T30.6121	CROSS SECTIONS
741	T30.6122	CROSS SECTIONS
742	T30.6123	CROSS SECTIONS
743	T30.6124	CROSS SECTIONS
744	T30.6125	CROSS SECTIONS
745	T30.6126	CROSS SECTIONS
746	T30.6127	CROSS SECTIONS
747	T30.6128	CROSS SECTIONS
748	T30.6129	CROSS SECTIONS
749	T30.6130	CROSS SECTIONS
750	T30.6131	CROSS SECTIONS
751	T30.6132	CROSS SECTIONS
752	T30.6133	CROSS SECTIONS
753	T30.6134	CROSS SECTIONS
754	T30.6135	CROSS SECTIONS
755	T30.6136	CROSS SECTIONS
756	T30.6137	CROSS SECTIONS
757	T30.6138	CROSS SECTIONS
758	T30.6139	CROSS SECTIONS
759	T30.6140	CROSS SECTIONS
760	T30.6141	CROSS SECTIONS
761	T30.6142	CROSS SECTIONS
762	T30.6143	CROSS SECTIONS
763	T30.6144	CROSS SECTIONS
764	T30.6145	CROSS SECTIONS
765	T30.6146	CROSS SECTIONS
766	T30.6147	CROSS SECTIONS
767	T30.6148	CROSS SECTIONS
768	T30.6149	CROSS SECTIONS
769	T30.6150	CROSS SECTIONS
770	T30.6151	CROSS SECTIONS
771	T30.6152	CROSS SECTIONS
772	T30.6153	CROSS SECTIONS
773	T30.6154	CROSS SECTIONS
774	T30.6155	CROSS SECTIONS
775	T30.6156	CROSS SECTIONS
776	T30.6157	CROSS SECTIONS
777	T30.6158	CROSS SECTIONS
778	T30.6159	CROSS SECTIONS
779	T30.6160	CROSS SECTIONS
780	T30.6161	CROSS SECTIONS
781	T30.6162	CROSS SECTIONS
782	T30.6163	CROSS SECTIONS
783	T30.6164	CROSS SECTIONS
784	T30.6165	CROSS SECTIONS
785	T30.6166	CROSS SECTIONS
786	T30.6167	CROSS SECTIONS
787	T30.6168	CROSS SECTIONS
788	T30.6169	CROSS SECTIONS
789	T30.6170	CROSS SECTIONS
790	T30.6171	CROSS SECTIONS
791	T30.6172	CROSS SECTIONS
792	T30.6173	CROSS SECTIONS
793	T30.6174	CROSS SECTIONS
794	T30.6175	CROSS SECTIONS
795	T30.6176	CROSS SECTIONS
796	T30.6177	CROSS SECTIONS
797	T30.6178	CROSS SECTIONS
798	T30.6179	CROSS SECTIONS
799	T30.6180	CROSS SECTIONS
800	T30.6181	CROSS SECTIONS
801	T30.6182	CROSS SECTIONS
802	T30.6183	CROSS SECTIONS
803	T30.6184	CROSS SECTIONS
804	T30.6185	CROSS SECTIONS
805	T30.6186	CROSS SECTIONS
806	T30.6187	CROSS SECTIONS
807	T30.6188	CROSS SECTIONS
808	T30.6189	CROSS SECTIONS
809	T30.6190	CROSS SECTIONS
810	T30.6191	CROSS SECTIONS

NOTICE: THE OFFICIAL RECORD OF THIS SHEET IS THE ELECTRONIC FILE SIGNED AND SEALED UNDER RULE 61G15-23.003, F.A.C.

REVISIONS

DATE	BY	DESCRIPTION	DATE	BY	DESCRIPTION

TRANSPORTATION
AECOM TECHNICAL SERVICES, Inc.
300 Colonial Center Pkwy, Suite 130
Lake Mary, FL. 32746
T 407.549.4200 F 407.549.4201
Certificate of Authorization No. 8115
DAVID S. BURWELL PE NO. 55853 www.aecom.com

STATE OF FLORIDA
DEPARTMENT OF TRANSPORTATION

ROAD NO.	COUNTY	FINANCIAL PROJECT ID
CFRC P2S	VARIOUS	423446-9-52-01

CENTRAL FLORIDA COMMUTER RAIL TRANSIT (CFCRT) PHASE 2 SOUTH

INDEX OF SHEETS

SHEET NO.
8

DRAWING NO.
C00.0011

SHEET NO.	DRAWING NO.	TITLE
811	T30.6192	CROSS SECTIONS
812	T30.6193	CROSS SECTIONS
813	T30.6194	CROSS SECTIONS
814	T30.6195	CROSS SECTIONS
815	T30.6196	CROSS SECTIONS
816	T30.6197	CROSS SECTIONS
817	T30.6198	CROSS SECTIONS
818	T30.6199	CROSS SECTIONS
819	T30.6200	CROSS SECTIONS
820	T30.6201	CROSS SECTIONS
821	T30.6202	CROSS SECTIONS
822	T30.6203	CROSS SECTIONS
823	T30.6204	CROSS SECTIONS
824	T30.6205	CROSS SECTIONS
825	T30.6206	CROSS SECTIONS
826	T30.6207	CROSS SECTIONS
827	T30.6208	CROSS SECTIONS
828	T30.6209	CROSS SECTIONS
829	T30.6210	CROSS SECTIONS
830	T30.6211	CROSS SECTIONS
831	T30.6212	CROSS SECTIONS
832	T30.6213	CROSS SECTIONS
833	T30.6214	CROSS SECTIONS
834	T30.6215	CROSS SECTIONS
835	T30.6216	CROSS SECTIONS
836	T30.6217	CROSS SECTIONS
837	T30.6218	CROSS SECTIONS
838	T30.6219	CROSS SECTIONS
839	T30.6220	CROSS SECTIONS
840	T30.6221	CROSS SECTIONS
841	T30.6222	CROSS SECTIONS
842	T30.6223	CROSS SECTIONS
843	T30.6224	CROSS SECTIONS
844	T30.6225	CROSS SECTIONS
845	T30.6226	CROSS SECTIONS
846	T30.6227	CROSS SECTIONS
847	T30.6228	CROSS SECTIONS
848	T30.6229	CROSS SECTIONS
849	T30.6230	CROSS SECTIONS
850	T30.6231	CROSS SECTIONS
851	T30.6232	CROSS SECTIONS
852	T30.6233	CROSS SECTIONS
853	T30.6234	CROSS SECTIONS
854	T30.6235	CROSS SECTIONS
855	T30.6236	CROSS SECTIONS
856	T30.6237	CROSS SECTIONS
857	T30.6238	CROSS SECTIONS
858	T30.6239	CROSS SECTIONS
859	T30.6240	CROSS SECTIONS
860	T30.6241	CROSS SECTIONS
861	T30.6242	CROSS SECTIONS
862	T30.6243	CROSS SECTIONS
863	T30.6244	CROSS SECTIONS
864	T30.6245	CROSS SECTIONS
865	T30.6246	CROSS SECTIONS
866	T30.6247	CROSS SECTIONS
867	T30.6248	CROSS SECTIONS
868	T30.6249	CROSS SECTIONS
869	T30.6250	CROSS SECTIONS
870	T30.6251	CROSS SECTIONS
871	T30.6252	CROSS SECTIONS
872	T30.6253	CROSS SECTIONS
873	T30.6254	CROSS SECTIONS
874	T30.6255	CROSS SECTIONS
875	T30.6256	CROSS SECTIONS
876	T30.6257	CROSS SECTIONS
877	T30.6258	CROSS SECTIONS
878	T30.6259	CROSS SECTIONS
879	T30.6260	CROSS SECTIONS
880	T30.6261	CROSS SECTIONS
881	T30.6262	CROSS SECTIONS
882	T30.6263	CROSS SECTIONS
883	T30.6264	CROSS SECTIONS
884	T30.6265	CROSS SECTIONS
885	T30.6266	CROSS SECTIONS
886	T30.6267	CROSS SECTIONS
887	T30.6268	CROSS SECTIONS
888	T30.6269	CROSS SECTIONS
889	T30.6270	CROSS SECTIONS
890	T30.6271	CROSS SECTIONS
891	T30.6272	CROSS SECTIONS
892	T30.6273	CROSS SECTIONS
893	T30.6274	CROSS SECTIONS
894	T30.6275	CROSS SECTIONS
895	T30.6276	CROSS SECTIONS
896	T30.6277	CROSS SECTIONS
897	T30.6278	CROSS SECTIONS
898	T30.6279	CROSS SECTIONS
899	T30.6280	CROSS SECTIONS
900	T30.6281	CROSS SECTIONS
901	T30.6282	CROSS SECTIONS
902	T30.6283	CROSS SECTIONS
903	T30.6284	CROSS SECTIONS
904	T30.6285	CROSS SECTIONS
905	T30.6286	CROSS SECTIONS
906	T30.6287	CROSS SECTIONS
907	T30.6288	CROSS SECTIONS
908	T30.6289	CROSS SECTIONS
909	T30.6290	CROSS SECTIONS
910	T30.6291	CROSS SECTIONS
911	T30.6292	CROSS SECTIONS
912	T30.6293	CROSS SECTIONS
913	T30.6294	CROSS SECTIONS
914	T30.6295	CROSS SECTIONS
915	T30.6296	CROSS SECTIONS
916	T30.6297	CROSS SECTIONS
917	T30.6298	CROSS SECTIONS
918	T30.6299	CROSS SECTIONS
919	T30.6300	CROSS SECTIONS
920	T30.6301	CROSS SECTIONS
921	T30.6302	CROSS SECTIONS
922	T30.6303	CROSS SECTIONS
923	T30.6304	CROSS SECTIONS
924	T30.6305	CROSS SECTIONS
925	T30.6306	CROSS SECTIONS
926	T30.6307	CROSS SECTIONS

NOTICE: THE OFFICIAL RECORD OF THIS SHEET IS THE ELECTRONIC FILE SIGNED AND SEALED UNDER RULE 61G15-23.003, F.A.C.

REVISIONS

DATE	BY	DESCRIPTION	DATE	BY	DESCRIPTION

TRANSPORTATION
AECOM TECHNICAL SERVICES, Inc.
300 Colonial Center Pkwy, Suite 130
Lake Mary, FL. 32746
T 407.549.4200 F 407.549.4201
Certificate of Authorization No. 8115
DAVID S. BURWELL PE NO. 55853 www.aecom.com

STATE OF FLORIDA
DEPARTMENT OF TRANSPORTATION

ROAD NO.	COUNTY	FINANCIAL PROJECT ID
CFRC P2S	VARIOUS	423446-9-52-01

CENTRAL FLORIDA COMMUTER RAIL TRANSIT (CFCRT) PHASE 2 SOUTH

INDEX OF SHEETS

SHEET NO.
9

DRAWING NO.
C00.001J

SHEET NO.	DRAWING NO.	TITLE
927	T30.6308	CROSS SECTIONS
928	T30.6309	CROSS SECTIONS
929	T30.6310	CROSS SECTIONS
930	T30.6311	CROSS SECTIONS
931	T30.6312	CROSS SECTIONS
932	T30.6313	CROSS SECTIONS
933	T30.6314	CROSS SECTIONS
934	T30.6315	CROSS SECTIONS
935	T30.6316	CROSS SECTIONS
936	T30.6317	CROSS SECTIONS
937	T30.6318	CROSS SECTIONS
938	T30.6319	CROSS SECTIONS
939	T30.6320	CROSS SECTIONS
940	T30.6321	CROSS SECTIONS
941	T30.6322	CROSS SECTIONS
942	T30.6323	CROSS SECTIONS
943	T30.6324	CROSS SECTIONS
944	T30.6325	CROSS SECTIONS
945	T30.6326	CROSS SECTIONS
946	T30.6327	CROSS SECTIONS
947	T30.6328	CROSS SECTIONS
948	T30.6329	CROSS SECTIONS
949	T30.6330	CROSS SECTIONS
950	T30.6331	CROSS SECTIONS
951	T30.6332	CROSS SECTIONS
952	T30.6333	CROSS SECTIONS
953	T30.6334	CROSS SECTIONS
954	T30.6335	CROSS SECTIONS
955	T30.6336	CROSS SECTIONS
956	T30.6337	CROSS SECTIONS
957	T30.6338	CROSS SECTIONS
958	T30.6339	CROSS SECTIONS
959	T30.6340	CROSS SECTIONS
960	T30.6341	CROSS SECTIONS
961	T30.6342	CROSS SECTIONS
962	T30.6343	CROSS SECTIONS
963	T30.6344	CROSS SECTIONS
964	T30.6345	CROSS SECTIONS
965	T30.6346	CROSS SECTIONS
966	T30.6347	CROSS SECTIONS
967	T30.6348	CROSS SECTIONS
968	T30.6349	CROSS SECTIONS
969	T30.6350	CROSS SECTIONS
970	T30.6351	CROSS SECTIONS
971	T30.6352	CROSS SECTIONS
972	T30.6353	CROSS SECTIONS
973	T30.6354	CROSS SECTIONS
974	T30.6355	CROSS SECTIONS
975	T30.6356	CROSS SECTIONS
976	T30.6357	CROSS SECTIONS
977	T30.6358	CROSS SECTIONS
978	T30.6359	CROSS SECTIONS
979	T30.6360	CROSS SECTIONS
980	T30.6361	CROSS SECTIONS
981	T30.6362	CROSS SECTIONS
982	T30.6363	CROSS SECTIONS
983	T30.6364	CROSS SECTIONS
984	T30.6365	CROSS SECTIONS
985	T30.6366	CROSS SECTIONS
986	T30.6367	CROSS SECTIONS
987	T30.6368	CROSS SECTIONS
988	T30.6369	CROSS SECTIONS
989	T30.6370	CROSS SECTIONS
990	T30.6371	CROSS SECTIONS
991	T30.6372	CROSS SECTIONS
992	T30.6373	CROSS SECTIONS
993	T30.6374	CROSS SECTIONS
994	T30.6375	CROSS SECTIONS
995	T30.6376	CROSS SECTIONS
996	T30.6377	CROSS SECTIONS
997	T30.6378	CROSS SECTIONS
998	T30.6379	CROSS SECTIONS
999	T30.6380	CROSS SECTIONS
1000	T30.6381	CROSS SECTIONS
1001	T30.6382	CROSS SECTIONS
1002	T30.6383	CROSS SECTIONS
1003	T30.6384	CROSS SECTIONS
1004	T30.6385	CROSS SECTIONS
1005	T30.6386	CROSS SECTIONS
1006	T30.6387	CROSS SECTIONS
1007	T30.6388	CROSS SECTIONS
1008	T30.6389	CROSS SECTIONS
1009	T30.6390	CROSS SECTIONS
1010	T30.6391	CROSS SECTIONS
1011	T30.6392	CROSS SECTIONS
1012	T30.6393	CROSS SECTIONS
1013	T30.6394	CROSS SECTIONS
1014	T30.6395	CROSS SECTIONS
1015	T30.6396	CROSS SECTIONS
1016	T30.6397	CROSS SECTIONS
1017	T30.6398	CROSS SECTIONS
1018	T30.6399	CROSS SECTIONS
1019	T30.6400	CROSS SECTIONS
1020	T30.6401	CROSS SECTIONS
1021	T30.6402	CROSS SECTIONS
1022	T30.6403	CROSS SECTIONS
1023	T30.6404	CROSS SECTIONS
1024	T30.6405	CROSS SECTIONS
1025	T30.6406	CROSS SECTIONS
1026	T30.6407	CROSS SECTIONS
1027	T30.6408	CROSS SECTIONS
1028	T30.6409	CROSS SECTIONS
1029	T30.6410	CROSS SECTIONS
1030	T30.6411	CROSS SECTIONS
1031	T30.6412	CROSS SECTIONS
1032	T30.6413	CROSS SECTIONS
1033	T30.6414	CROSS SECTIONS
1034	T30.6415	CROSS SECTIONS
1035	T30.6416	CROSS SECTIONS
1036	T30.6417	CROSS SECTIONS
1037	T30.6418	CROSS SECTIONS
1038	T30.6419	CROSS SECTIONS
1039	T30.6420	CROSS SECTIONS
1040	T30.6421	CROSS SECTIONS
1041	T30.6422	CROSS SECTIONS
1042	T30.6423	CROSS SECTIONS

NOTICE: THE OFFICIAL RECORD OF THIS SHEET IS THE ELECTRONIC FILE SIGNED AND SEALED UNDER RULE 61G15-23.003, F.A.C.

REVISIONS

DATE	BY	DESCRIPTION	DATE	BY	DESCRIPTION

TRANSPORTATION
AECOM TECHNICAL SERVICES, Inc.
300 Colonial Center Pkwy, Suite 130
Lake Mary, FL. 32746
T 407.549.4200 F 407.549.4201
Certificate of Authorization No. 8115
DAVID S. BURWELL PE NO. 55853 www.aecom.com

STATE OF FLORIDA
DEPARTMENT OF TRANSPORTATION

ROAD NO.	COUNTY	FINANCIAL PROJECT ID
CFRC P2S	VARIOUS	423446-9-52-01

CENTRAL FLORIDA COMMUTER RAIL TRANSIT (CFCRT) PHASE 2 SOUTH

INDEX OF SHEETS

SHEET NO. 10

SHEET NO.	DRAWING NO.	TITLE
1043	T30.6424	CROSS SECTIONS
1044	T30.6425	CROSS SECTIONS
1045	T30.6426	CROSS SECTIONS
1046	T30.6427	CROSS SECTIONS
1047	T30.6428	CROSS SECTIONS
1048	T30.6429	CROSS SECTIONS
1049	T30.6430	CROSS SECTIONS
1050	T30.6431	CROSS SECTIONS
1051	T30.6432	CROSS SECTIONS
1052	T30.6433	CROSS SECTIONS
1053	T30.6434	CROSS SECTIONS
1054	T30.6435	CROSS SECTIONS
1055	T30.6436	CROSS SECTIONS
1056	T30.6437	CROSS SECTIONS
1057	T30.6438	CROSS SECTIONS
1058	T30.6439	CROSS SECTIONS
1059	T30.6440	CROSS SECTIONS
1060	T30.6441	CROSS SECTIONS
1061	T30.6442	CROSS SECTIONS
1062	T30.6443	CROSS SECTIONS
1063	T30.6444	CROSS SECTIONS
1064	T30.6445	CROSS SECTIONS
1065	T30.6446	CROSS SECTIONS
1066	T30.6447	CROSS SECTIONS
1067	T30.6448	CROSS SECTIONS
1068	T30.6449	CROSS SECTIONS
1069	T30.6450	CROSS SECTIONS
1070	T30.6451	CROSS SECTIONS
1071	T30.6452	CROSS SECTIONS
1072	T30.6453	CROSS SECTIONS
1073	T30.6454	CROSS SECTIONS
1074	T30.6455	CROSS SECTIONS
1075	T30.6456	CROSS SECTIONS
1076	T30.6457	CROSS SECTIONS
1077	T30.6458	CROSS SECTIONS
1078	T30.6459	CROSS SECTIONS
1079	T30.6460	CROSS SECTIONS
1080	T30.6461	CROSS SECTIONS
1081	T30.6462	CROSS SECTIONS
1082	T30.6463	CROSS SECTIONS
1083	T30.6464	CROSS SECTIONS
1084	T30.6465	CROSS SECTIONS
1085	T30.6466	CROSS SECTIONS
1086	T30.6467	CROSS SECTIONS
1087	T30.6468	CROSS SECTIONS
1088	T30.6469	CROSS SECTIONS
1089	T30.6470	CROSS SECTIONS
1090	T30.6471	CROSS SECTIONS
1091	T30.6472	CROSS SECTIONS
1092	T30.6473	CROSS SECTIONS
1093	T30.6474	CROSS SECTIONS
1094	T30.6475	CROSS SECTIONS
1095	T30.6476	CROSS SECTIONS
1096	T30.6477	CROSS SECTIONS
1097	T30.6478	CROSS SECTIONS
1098	T30.6479	CROSS SECTIONS
1099	T30.6480	CROSS SECTIONS
1100	T30.6481	CROSS SECTIONS
1101	T30.6482	CROSS SECTIONS
1102	T30.6483	CROSS SECTIONS
1103	T30.6484	CROSS SECTIONS
1104	T30.6485	CROSS SECTIONS
1105	T30.6486	CROSS SECTIONS
1106	T30.6487	CROSS SECTIONS
1107	T30.6488	CROSS SECTIONS
1108	T30.6489	CROSS SECTIONS
1109	T30.6490	CROSS SECTIONS
1110	T30.6491	CROSS SECTIONS
1111	T30.6492	CROSS SECTIONS
1112	T30.6493	CROSS SECTIONS
1113	T30.6494	CROSS SECTIONS
1114	T30.6495	CROSS SECTIONS
1115	T30.6496	CROSS SECTIONS
1116	T30.6497	CROSS SECTIONS
1117	T30.6498	CROSS SECTIONS
1118	T30.6499	CROSS SECTIONS
1119	T30.6500	CROSS SECTIONS
1120	T30.6501	CROSS SECTIONS
1121	T30.6502	CROSS SECTIONS
1122	T30.6503	CROSS SECTIONS
1123	T30.6504	CROSS SECTIONS
1124	T30.6505	CROSS SECTIONS
1125	T30.6506	CROSS SECTIONS
1126	T30.6507	CROSS SECTIONS
1127	T30.6508	CROSS SECTIONS
1128	T30.6509	CROSS SECTIONS
1129	T30.6510	CROSS SECTIONS
1130	T30.6511	CROSS SECTIONS
1131	C30.0597	STORMWATER POLLUTION PREVENTION PLAN
1132	C30.0598	STORMWATER POLLUTION PREVENTION PLAN
1133	C30.0599	WETLAND IMPACTS / SWPPP
1134	C30.0600	WETLAND IMPACTS / SWPPP
1135	C30.0601	WETLAND IMPACTS / SWPPP
1136	C30.0602	WETLAND IMPACTS / SWPPP
1137	C30.0603	WETLAND IMPACTS / SWPPP
1138	C30.0604	WETLAND IMPACTS / SWPPP
1139	C30.0605	WETLAND IMPACTS / SWPPP
1140	C30.0606	WETLAND IMPACTS / SWPPP
1141	C30.0607	WETLAND IMPACTS / SWPPP
1142	C30.0608	WETLAND IMPACTS / SWPPP
1143	C30.0609	WETLAND IMPACTS / SWPPP
1144	C30.0610	WETLAND IMPACTS / SWPPP
1145	C30.0611	WETLAND IMPACTS / SWPPP
1146	C30.0612	WETLAND IMPACTS / SWPPP
1147	C30.0613	WETLAND IMPACTS / SWPPP
1148	C30.0614	WETLAND IMPACTS / SWPPP
1149	C30.0615	WETLAND IMPACTS / SWPPP
1150	C30.0616	WETLAND IMPACTS / SWPPP
1151	C30.0617	WETLAND IMPACTS / SWPPP
1152	C30.0618	WETLAND IMPACTS / SWPPP
1153	C30.0619	WETLAND IMPACTS / SWPPP
1154	C30.0620	WETLAND IMPACTS / SWPPP
1155	C30.0621	WETLAND IMPACTS / SWPPP
1156	C30.0622	WETLAND IMPACTS / SWPPP
1157	C30.0623	WETLAND IMPACTS / SWPPP
1158	C30.0624	WETLAND IMPACTS / SWPPP

DRAWING NO.
C00.00IK

NOTICE: THE OFFICIAL RECORD OF THIS SHEET IS THE ELECTRONIC FILE SIGNED AND SEALED UNDER RULE 61G15-23.003, F.A.C.

REVISIONS

DATE	BY	DESCRIPTION	DATE	BY	DESCRIPTION

TRANSPORTATION
AECOM TECHNICAL SERVICES, Inc.
300 Colonial Center Pkwy, Suite 130
Lake Mary, FL. 32746
T 407.549.4200 F 407.549.4201
Certificate of Authorization No. 8115
DAVID S. BURWELL PE NO. 55853 www.aecom.com

STATE OF FLORIDA
DEPARTMENT OF TRANSPORTATION

ROAD NO.	COUNTY	FINANCIAL PROJECT ID
CFRC P2S	VARIOUS	423446-9-52-01

CENTRAL FLORIDA COMMUTER RAIL TRANSIT (CFCRT) PHASE 2 SOUTH

INDEX OF SHEETS

SHEET NO. 11

SHEET NO.	DRAWING NO.	TITLE
1159	C30.0625	WETLAND IMPACTS / SWPPP
1160	C30.0626	WETLAND IMPACTS / SWPPP
1161	C30.0627	WETLAND IMPACTS / SWPPP
1162	C30.0628	WETLAND IMPACTS / SWPPP
1163	C30.0629	WETLAND IMPACTS / SWPPP
1164	C30.0630	WETLAND IMPACTS / SWPPP
1165	C30.0631	WETLAND IMPACTS / SWPPP
1166	C30.0632	WETLAND IMPACTS / SWPPP
1167	C30.0633	WETLAND IMPACTS / SWPPP
1168	T30.0701	UTILITY ADJUSTMENTS
1169	T30.0702	UTILITY ADJUSTMENTS
1170	T30.0703	UTILITY ADJUSTMENTS
1171	T30.0704	UTILITY ADJUSTMENTS
1172	T30.0705	UTILITY ADJUSTMENTS
1173	T30.0706	UTILITY ADJUSTMENTS
1174	T30.0707	UTILITY ADJUSTMENTS
1175	T30.0708	UTILITY ADJUSTMENTS
1176	T30.0709	UTILITY ADJUSTMENTS
1177	T30.0710	UTILITY ADJUSTMENTS
1178	T30.0711	UTILITY ADJUSTMENTS
1179	T30.0712	UTILITY ADJUSTMENTS
1180	T30.0713	UTILITY ADJUSTMENTS
1181	T30.0714	UTILITY ADJUSTMENTS
1182	T30.0715	UTILITY ADJUSTMENTS
1183	T30.0716	UTILITY ADJUSTMENTS
1184	T30.0717	UTILITY ADJUSTMENTS
1185	T30.0718	UTILITY ADJUSTMENTS
1186	T30.0719	UTILITY ADJUSTMENTS
1187	T30.0720	UTILITY ADJUSTMENTS
1188	T30.0721	UTILITY ADJUSTMENTS
1189	T30.0722	UTILITY ADJUSTMENTS
1190	T30.0723	UTILITY ADJUSTMENTS
1191	T30.0724	UTILITY ADJUSTMENTS
1192	T30.0725	UTILITY ADJUSTMENTS
1193	T30.0726	UTILITY ADJUSTMENTS
1194	T30.0727	UTILITY ADJUSTMENTS
1195	T30.0728	UTILITY ADJUSTMENTS
1196	T30.0729	UTILITY ADJUSTMENTS
1197	T30.0730	UTILITY ADJUSTMENTS
1198	T30.0731	UTILITY ADJUSTMENTS
1199	T30.0732	UTILITY ADJUSTMENTS
1200	T30.0733	UTILITY ADJUSTMENTS
1201	T30.0734	UTILITY ADJUSTMENTS
1202	T30.0735	UTILITY ADJUSTMENTS
1203	T30.0736	UTILITY ADJUSTMENTS
1204	T30.0737	UTILITY ADJUSTMENTS
1205	T30.0738	UTILITY ADJUSTMENTS
1206	T30.0739	UTILITY ADJUSTMENTS
1207	T30.0740	UTILITY ADJUSTMENTS
1208	T30.0741	UTILITY ADJUSTMENTS
1209	T30.0742	UTILITY ADJUSTMENTS
1210	T30.0743	UTILITY ADJUSTMENTS
1211	T30.0744	UTILITY ADJUSTMENTS
1212	T30.0745	UTILITY ADJUSTMENTS
1213	T30.0746	UTILITY ADJUSTMENTS
1214	T30.0747	UTILITY ADJUSTMENTS
1215	T30.0748	UTILITY ADJUSTMENTS
1216	T30.0749	UTILITY ADJUSTMENTS
1217	T30.0750	UTILITY ADJUSTMENTS
1218	T30.0751	UTILITY ADJUSTMENTS
1219	T30.0752	UTILITY ADJUSTMENTS
1220	T30.0753	UTILITY ADJUSTMENTS
1221	T30.0754	UTILITY ADJUSTMENTS
1222	T30.0755	UTILITY ADJUSTMENTS
1223	T30.0756	UTILITY ADJUSTMENTS
1224	T30.0757	UTILITY ADJUSTMENTS
1225	T30.0758	UTILITY ADJUSTMENTS
1226	T30.0759	UTILITY ADJUSTMENTS
1227	T30.0760	UTILITY ADJUSTMENTS
1228	T30.0761	UTILITY ADJUSTMENTS
1229	T30.0762	UTILITY ADJUSTMENTS
1230	T30.0763	UTILITY ADJUSTMENTS
1231	T30.0764	UTILITY ADJUSTMENTS
1232	T30.0765	UTILITY ADJUSTMENTS
1233	B79980.001	MP A799.8 CRASH WALL SITE PLAN
1234	B79980.002	MP A799.8 CRASH WALL PLAN AND ELEVATION
1235	B79980.003	MP A799.8 CRASH WALL PLAN AND ELEVATION
1236	B79980.004	MP A799.8 CRASH WALL SOUTH STRUCTURAL DETAILS
1237	B79980.005	MP A799.8 CRASH WALL NORTH STRUCTURAL DETAILS
1238	B79980.006	MP A799.8 CRASH WALL STRUCTURAL DETAILS
1239	C7998.001	REPORT OF SPT BORINGS FOR STRUCTURES
1240	B8006.001	MP A800.6 GENERAL NOTES
1241	B8006.005	MP A800.6 PLAN AND ELEVATION (1 OF 2)
1242	B8006.006	MP A800.6 PLAN AND ELEVATION (2 OF 2)
1243	B8006.007	MP A800.6 FOUNDATION LAYOUT
1244	B8006.008	MP A800.6 END BENT NO.'S 1 & 5 CONCRETE DETAILS
1245	B8006.009	MP A800.6 END BENT NO.'S 1 & 5 REINFORCING DETAILS (1 OF 3)
1246	B8006.010	MP A800.6 END BENT NO.'S 1 & 5 REINFORCING DETAILS (2 OF 3)
1247	B8006.011	MP A800.6 END BENT NO.'S 1 & 5 REINFORCING DETAILS (3 OF 3)
1248	B8006.012	MP A800.6 INTERMEDIATE BENT NO.'S 2, 3 & 4 CONCRETE DETAILS
1249	B8006.013	MP A800.6 INTERMEDIATE BENT NO.'S 2, 3 & 4 REINFORCING DETAILS
1250	B8006.014	MP A800.6 INTERMEDIATE BENT NO.'S 2, 3 & 4 REINFORCING DETAILS
1251	B8006.015	MP A800.6 PRESTRESSED GIRDER 29' II" NOTES & CONCRETE DETAILS
1252	B8006.016	MP A800.6 PRESTRESSED GIRDER 29' II" & REINFORCING DETAILS
1253	B8006.017	MP A800.6 PRESTRESSED GIRDER 29' II" MISC. GIRDER DETAILS
1254	B8006.019	MP A800.6 WALKWAY DETAILS BRIDGE DECK SECTION
1255	B8006.020	MP A800.6 WALKWAY DETAILS (1 OF 3)
1256	B8006.021	MP A800.6 WALKWAY DETAILS (2 OF 3)
1257	B8006.022	MP A800.6 WALKWAY DETAILS (3 OF 3)
1258	B8006.024	MP A800.6 REINFORCING TABLE
1259	C8006.001	BORING AND MUCK PROBE LOCATION PLAN
1260	C8006.002	REPORT OF SPT BORINGS FOR STRUCTURES
1261	C8006.003	REPORT OF SPT BORINGS FOR STRUCTURES
1262	C8006.004	REPORT OF SPT BORINGS FOR STRUCTURES
1263	B8039.001	MP A803.9 NEAR KISSIMMEE, FL
1264	B8039.002	MP A803.9 NEAR KISSIMMEE, FL
1265	B8039.003	MP A803.9 MISC. CULVERT DETAILS (1 OF 3)
1266	B8039.004	MP A803.9 MISC. CULVERT DETAILS (2 OF 3)
1267	B8039.005	MP A803.9 MISC. CULVERT DETAILS (3 OF 3)
1268	B8039.006	MP A803.9 BOX CULVERT DATA TABLES
1269	B8039.007	MP A803.9 REINFORCEMENT BAR LIST
1270	C8039.001	BORING AND MUCK PROBE LOCATION PLAN
1271	C8039.002	REPORT OF SPT BORINGS FOR STRUCTURES
1272	C8039.003	REPORT OF SPT BORINGS FOR STRUCTURES
1273	B8059.001	MP A805.9 NEAR KISSIMMEE, FL
1274	B8059.002	MP A805.9 NEAR KISSIMMEE, FL

NOTICE: THE OFFICIAL RECORD OF THIS SHEET IS THE ELECTRONIC FILE SIGNED AND SEALED UNDER RULE 61G15-23.003, F.A.C.

REVISIONS

DATE	BY	DESCRIPTION	DATE	BY	DESCRIPTION

TRANSPORTATION
AECOM TECHNICAL SERVICES, Inc.
300 Colonial Center Pkwy, Suite 130
Lake Mary, FL. 32746
T 407.549.4200 F 407.549.4201
Certificate of Authorization No. 8115
DAVID S. BURWELL PE NO. 55853 www.aecom.com

STATE OF FLORIDA
DEPARTMENT OF TRANSPORTATION

ROAD NO.	COUNTY	FINANCIAL PROJECT ID
CFRC P2S	VARIOUS	423446-9-52-01

CENTRAL FLORIDA COMMUTER RAIL TRANSIT (CFCRT) PHASE 2 SOUTH

INDEX OF SHEETS

SHEET NO. 12

DRAWING NO.
C00.00IM

SHEET NO.	DRAWING NO.	TITLE
1275	B8059.003	MP A805.9 MISC. CULVERT DETAILS (1 OF 3)
1276	B8059.004	MP A805.9 MISC. CULVERT DETAILS (2 OF 3)
1277	B8059.005	MP A805.9 MISC. CULVERT DETAILS (3 OF 3)
1278	B8059.006	MP A805.9 BOX CULVERT DATA TABLES
1279	B8059.007	MP A805.9 REINFORCEMENT BAR LIST
1280	C8059.001	BORING AND MUCK PROBE LOCATION PLAN
1281	C8059.002	REPORT OF SPT BORINGS FOR STRUCTURES
1282	C8059.003	REPORT OF SPT BORINGS FOR STRUCTURES
1283	B80673.001	RETAINING CANTILEVER SHEET PILE WALL DATA TABLE AND DETAILS
1284	B80673.002	RETAINING WALL GEOTECHNICAL DATA
1285	B80673.003	CANTILEVER STEEL SHEET PILE WALL DETAILS
1286	B80673.004	MP 806.73 RETAINING WALL PLAN AND ELEVATION
1287	C80673.001	REPORT OF SPT BORINGS FOR STRUCTURES
1288	B80680.001	MP 806.80 RETAINING WALL PLAN AND ELEVATION
1289	C80680.001	REPORT OF SPT BORINGS FOR STRUCTURES
1290	B80690.001	MP 806.90 RETAINING WALL EXISTING AND PROPOSED PLANS
1291	B80690.002	MP 806.90 RETAINING WALL ELEVATION
1292	B80690.003	MP 806.90 RETAINING WALL PLAN AND ELEVATION
1293	B80690.004	MP 806.90 RETAINING WALL PLAN AND ELEVATION
1294	B80690.005	MP 806.90 RETAINING WALL STRUCTURAL DETAILS
1295	B80690.006	MP 806.90 CONCRETE RETAINING WALL CROSS SECTION
1296	B80690.007	MP 806.90 RETAINING WALL STRUCTURAL DETAILS
1297	B80690.007A	MP 806.90 RETAINING WALL STRUCTURAL DETAILS
1298	B80690.008	MP 806.90 RETAINING WALL PLAN AND ELEVATION
1299	C80689.001	REPORT OF SPT BORINGS FOR STRUCTURES
1300	B80708.001	MP 807.08 RETAINING WALL PLAN AND ELEVATION
1301	C80708.001	REPORT OF SPT BORINGS FOR STRUCTURES
1302	B80898.001	MP A808.98 CRASH WALLS SITE PLAN
1303	B80898.002	MP A808.98 EAST CRASH WALLS PLAN AND ELEVATION
1304	B80898.003	MP A808.98 WEST CRASH WALLS PLAN AND ELEVATION
1305	B80898.004	MP A808.98 CRASH WALL STRUCTURAL DETAILS
1306	C80898.001	REPORT OF SPT BORINGS FOR STRUCTURES
1307	B8113.002	MP 811.3 GENERAL NOTES
1308	B8113.003	MP 811.3 PLAN AND ELEVATION (1 OF 5)
1309	B8113.004	MP 811.3 PLAN AND ELEVATION (2 OF 5)
1310	B8113.005	MP 811.3 PLAN AND ELEVATION (3 OF 5)
1311	B8113.006	MP 811.3 PLAN AND ELEVATION (4 OF 5)
1312	B8113.007	MP 811.3 PLAN AND ELEVATION (5 OF 5)
1313	B8113.008	MP 811.3 CONSTRUCTION SEQUENCE
1314	B8113.009	MP 811.3 CONSTRUCTION SEQUENCE
1315	C8113.001	BORING LOCATION PLAN
1316	C8113.002	REPORT OF SPT BORINGS FOR STRUCTURES
1317	C8113.003	REPORT OF SPT BORINGS FOR STRUCTURES
1318	C8113.004	REPORT OF SPT BORINGS FOR STRUCTURES
1319	C8113.005	REPORT OF SPT BORINGS FOR STRUCTURES
1320	C8113.006	REPORT OF SPT BORINGS FOR STRUCTURES
1321	C8113.007	REPORT OF SPT BORINGS FOR STRUCTURES
1322	B8113.011	MP 811.3 FOUNDATION LAYOUT
1323	B8113.012	MP 811.3 FOUNDATION LAYOUT
1324	B8113.013	MP 811.3 BENT NO.'S 1 & 12
1325	B8113.014	MP 811.3 BENT NO.'S 1 & 12 DETAILS (1 OF 3)
1326	B8113.015	MP 811.3 BENT NO.'S 1 & 12 DETAILS (2 OF 3)
1327	B8113.016	MP 811.3 BENT NO.'S 1 & 12 DETAILS (3 OF 3)
1328	B8113.017	MP 811.3 INTERMEDIATE BENT NO.'S 2-6, 9-11
1329	B8113.018	MP 811.3 INTERMEDIATE BENT NO.'S 2-6, 9-11 DETAILS (1 OF 2)
1330	B8113.019	MP 811.3 INTERMEDIATE BENT NO.'S 2-6, 9-11 DETAILS (2 OF 2)
1331	B8113.020	MP 811.3 INTERMEDIATE BENT NO.'S 7 & 8
1332	B8113.021	MP 811.3 INTERMEDIATE BENT NO.'S 7 & 8 DETAILS (1 OF 2)
1333	B8113.022	MP 811.3 INTERMEDIATE BENT NO.'S 7 & 8 DETAILS (2 OF 2)
1334	B8113.023	MP 811.3 PRESTRESSED GIRDER DETAILS (1 OF 3)
1335	B8113.024	MP 811.3 PRESTRESSED GIRDER DETAILS (2 OF 3)
1336	B8113.025	MP 811.3 PRESTRESSED GIRDER DETAILS (3 OF 3)
1337	B8113.026	MP 811.3 PRESTRESSED GIRDER 28' 5"
1338	B8113.027	MP 811.3 PRESTRESSED GIRDER 28' 8 1/2"
1339	B8113.028	MP 811.3 PRESTRESSED GIRDER 29' 11"
1340	B8113.029	MP 811.3 THROUGH PLATE GIRDER (1 OF 8)
1341	B8113.030	MP 811.3 THROUGH PLATE GIRDER (2 OF 8)
1342	B8113.031	MP 811.3 THROUGH PLATE GIRDER (3 OF 8)
1343	B8113.032	MP 811.3 THROUGH PLATE GIRDER (4 OF 8)
1344	B8113.033	MP 811.3 THROUGH PLATE GIRDER (5 OF 8)
1345	B8113.034	MP 811.3 THROUGH PLATE GIRDER (6 OF 8)
1346	B8113.035	MP 811.3 THROUGH PLATE GIRDER (7 OF 8)
1347	B8113.036	MP 811.3 THROUGH PLATE GIRDER (8 OF 8)
1348	B8113.037	MP 811.3 BRIDGE DECK SECTIONS
1349	B8113.038	MP 811.3 WALKWAY DETAILS (1 OF 2)
1350	B8113.039	MP 811.3 WALKWAY DETAILS (2 OF 2)
1351	B8113.040	MP 811.3 RIPRAP DETAILS
1352	B8113.041	MP 811.3 REINFORCING BAR LIST (1 OF 4)
1353	B8113.042	MP 811.3 REINFORCING BAR LIST (2 OF 4)
1354	B8113.043	MP 811.3 REINFORCING BAR LIST (3 OF 4)
1355	B8113.044	MP 811.3 REINFORCING BAR LIST (4 OF 4)
1356	B8131.001	MP A813.1 NEAR KISSIMME, FL
1357	B8131.002	MP A813.1 NEAR KISSIMME, FL
1358	B8131.003	MP A813.1 MISC CULVERT DETIALS (1 OF 6)
1359	B8131.004	MP A813.1 MISC CULVERT DETIALS (2 OF 6)
1360	B8131.005	MP A813.1 MISC CULVERT DETIALS (3 OF 6)
1361	B8131.006	MP A813.1 MISC CULVERT DETIALS (4 OF 6)
1362	B8131.007	MP A813.1 MISC CULVERT DETIALS (5 OF 6)
1363	B8131.008	MP A813.1 MISC CULVERT DETIALS (6 OF 6)
1364	B8131.009	MP A813.1 BOX CULVERT DATA TABLES
1365	B8131.010	MP A813.1 REINFORCEMENT BAR LIST
1366	C8131.001	BORING AND MUCK PROBE LOCATION PLAN
1367	C8131.002	REPORT OF SPT BORINGS FOR STRUCTURES
1368	C8131.003	REPORT OF SPT BORINGS FOR STRUCTURES
1369	B81355.001	MP 813.55 RETAINING WALL PLAN AND ELEVATION
1370	C81355.001	REPORT OF SPT BORINGS FOR STRUCTURES
1371	M30.001	ITS DUCT PLAN
1372	M30.002	ITS DUCT PLAN
1373	M30.003	ITS DUCT PLAN
1374	M30.004	ITS DUCT PLAN
1375	M30.005	ITS DUCT PLAN
1376	M30.006	ITS DUCT PLAN
1377	M30.007	ITS DUCT PLAN
1378	M30.008	ITS DUCT PLAN
1379	M30.009	ITS DUCT PLAN
1380	M30.010	ITS DUCT PLAN
1381	M30.011	ITS DUCT PLAN
1382	M30.012	ITS DUCT PLAN
1383	M30.013	ITS DUCT PLAN
1384	M30.014	ITS DUCT PLAN
1385	M30.015	ITS DUCT PLAN
1386	M30.016	ITS DUCT PLAN
1387	M30.017	ITS DUCT PLAN
1388	M30.018	ITS DUCT PLAN
1389	M30.019	ITS DUCT PLAN
1390	M30.020	ITS DUCT PLAN

NOTICE: THE OFFICIAL RECORD OF THIS SHEET IS THE ELECTRONIC FILE SIGNED AND SEALED UNDER RULE 61G15-23.003, F.A.C.

REVISIONS

DATE	BY	DESCRIPTION	DATE	BY	DESCRIPTION

TRANSPORTATION
AECOM TECHNICAL SERVICES, Inc.
300 Colonial Center Pkwy, Suite 130
Lake Mary, FL. 32746
T 407.549.4200 F 407.549.4201
Certificate of Authorization No. 8115
DAVID S. BURWELL PE NO. 55853 www.aecom.com

STATE OF FLORIDA
DEPARTMENT OF TRANSPORTATION

ROAD NO.	COUNTY	FINANCIAL PROJECT ID
CFRC P2S	VARIOUS	423446-9-52-01

CENTRAL FLORIDA COMMUTER RAIL TRANSIT (CFCRT) PHASE 2 SOUTH

INDEX OF SHEETS

SHEET NO. 13

DRAWING NO.

C00.00IN

SHEET NO.	DRAWING NO.	TITLE
~~1391~~	~~M30.021~~	~~ITS DUCT PLAN~~
~~1392~~	~~M30.022~~	~~ITS DUCT PLAN~~
~~1393~~	~~M30.023~~	~~ITS DUCT PLAN~~
~~1394~~	~~M30.024~~	~~ITS DUCT PLAN~~
~~1395~~	~~M30.025~~	~~ITS DUCT PLAN~~
~~1396~~	~~M30.026~~	~~ITS DUCT PLAN~~
~~1397~~	~~M30.027~~	~~ITS DUCT PLAN~~
~~1398~~	~~M30.028~~	~~ITS DUCT PLAN~~
~~1399~~	~~M30.029~~	~~ITS DUCT PLAN~~
~~1400~~	~~M30.030~~	~~ITS DUCT PLAN~~
~~1401~~	~~M30.031~~	~~ITS DUCT PLAN~~
~~1402~~	~~M30.032~~	~~ITS DUCT PLAN~~
~~1403~~	~~M30.033~~	~~ITS DUCT PLAN~~
~~1404~~	~~M30.034~~	~~ITS DUCT PLAN~~
~~1405~~	~~M30.035~~	~~ITS DUCT PLAN~~
~~1406~~	~~M30.036~~	~~ITS DUCT PLAN~~
~~1407~~	~~M30.037~~	~~ITS DUCT PLAN~~
~~1408~~	~~M30.038~~	~~ITS DUCT PLAN~~
~~1409~~	~~M30.039~~	~~ITS DUCT PLAN~~
~~1410~~	~~M30.040~~	~~ITS DUCT PLAN~~
~~1411~~	~~M30.041~~	~~ITS DUCT PLAN~~
~~1412~~	~~M30.042~~	~~ITS DUCT PLAN~~
~~1413~~	~~M30.043~~	~~ITS DUCT PLAN~~
~~1414~~	~~M30.044~~	~~ITS DUCT PLAN~~
~~1415~~	~~M30.045~~	~~ITS DUCT PLAN~~
~~1416~~	~~M30.046~~	~~ITS DUCT PLAN~~
~~1417~~	~~M30.047~~	~~ITS DUCT PLAN~~
~~1418~~	~~M30.048~~	~~ITS DUCT PLAN~~
~~1419~~	~~M30.049~~	~~ITS DUCT PLAN~~
~~1420~~	~~M30.050~~	~~ITS DUCT PLAN~~
~~1421~~	~~M30.051~~	~~ITS DUCT PLAN~~
~~1422~~	~~M30.052~~	~~ITS DUCT PLAN~~
~~1423~~	~~M30.053~~	~~ITS DUCT PLAN~~
~~1424~~	~~M30.054~~	~~ITS DUCT PLAN~~
~~1425~~	~~M30.055~~	~~ITS DUCT PLAN~~
~~1426~~	~~M30.056~~	~~ITS DUCT PLAN~~
~~1427~~	~~M30.057~~	~~ITS DUCT PLAN~~
~~1428~~	~~M30.058~~	~~ITS DUCT PLAN~~
~~1429~~	~~M30.059~~	~~ITS DUCT PLAN~~
~~1430~~	~~M30.060~~	~~ITS DUCT PLAN~~
~~1431~~	~~M30.061~~	~~ITS DUCT PLAN~~
~~1432~~	~~M30.062~~	~~ITS DUCT PLAN~~
~~1433~~	~~M30.063~~	~~ITS DUCT PLAN~~
~~1434~~	~~M30.064~~	~~ITS DUCT PLAN~~
~~1435~~	~~M30.065~~	~~ITS DUCT PLAN~~
~~1436~~	~~M20.766~~	~~ITS DUCT PLAN DETAILS PULL & JUNCTION BOX SPECIAL 1 OF 2~~
~~1437~~	~~M20.767~~	~~ITS DUCT PLAN DETAILS PULL & JUNCTION BOX SPECIAL 2 OF 2~~
~~1438~~	~~M20.768~~	~~ITS DUCT PLAN DETAILS FIBER OPTIC PULL BOX~~
~~1439~~	~~M20.769~~	~~ITS DUCT PLAN DETAILS TYPICAL DIRECTIONAL BORE~~
~~1440~~	~~M20.770~~	~~ITS DUCT PLAN DETAILS TYP. INTERMEDIATE POINT~~
1441	C14.005	MEADOW WOODS STATION EXISTING SITE PLAN
1442	C14.006	MEADOW WOODS STATION DEMOLITION PLAN
1443	C14.006A	MEADOW WOODS STATION DEMOLITION PLAN
1444	C14.006B	MEADOW WOODS STATION DEMOLITION PLAN
1445	C14.006C	MEADOW WOODS STATION DEMOLITION PLAN
1446	C14.006D	MEADOW WOODS STATION DEMOLITION PLAN
1447	C14.006E	MEADOW WOODS STATION DEMOLITION PLAN
1448	C14.006F	MEADOW WOODS STATION DEMOLITION PLAN
1449	C14.010G	MEADOW WOODS STATION OVERALL DRAINAGE MAP
1450	C14.010H	MEADOW WOODS STATION DETAILED DRAINAGE MAP
1451	C14.010M	MEADOW WOODS STATION ENVIRONMENTAL PLAN
1452	C14.010N	MEADOW WOODS STATION SUMMARY OF DRAINAGE STRUCTURES
1453	C14.010O	MEADOW WOODS STATION SUMMARY OF DRAINAGE STRUCTURES
1454	C14.010P	MEADOW WOODS STATION SUMMARY OF DRAINAGE STRUCTURES
1455	C14.010Q	MEADOW WOODS STATION OPTIONAL MATERIALS TABULATIONS
1456	C14.007	MEADOW WOODS STATION PROPOSED SITE PLAN
1457	C14.007A	MEADOW WOODS STATION PROPOSED SITE PLAN
1458	C14.007B	MEADOW WOODS STATION PROPOSED SITE PLAN
1459	C14.007C	MEADOW WOODS STATION PROPOSED SITE PLAN
1460	C14.007D	MEADOW WOODS STATION PROPOSED SITE PLAN
1461	C14.007E	MEADOW WOODS STATION PROPOSED SITE PLAN
1462	C14.007F	MEADOW WOODS STATION PROPOSED SITE PLAN
1463	C14.014A	MEADOW WOODS STATION PROPOSED OFF SITE PLAN
1464	C14.008A	MEADOW WOODS STATION COORDINATE DATA
1465	C14.008B	MEADOW WOODS STATION COORDINATE DATA
1466	C14.008C	MEADOW WOODS STATION COORDINATE DATA
1467	C14.009	MEADOW WOODS STATION GRADING PLAN
1468	C14.009A	MEADOW WOODS STATION GRADING PLAN
1469	C14.009B	MEADOW WOODS STATION GRADING PLAN
1470	C14.009C	MEADOW WOODS STATION GRADING PLAN
1471	C14.009D	MEADOW WOODS STATION GRADING PLAN
1472	C14.009E	MEADOW WOODS STATION GRADING PLAN
1473	C14.009F	MEADOW WOODS STATION GRADING PLAN
1474	C14.010	MEADOW WOODS STATION DRAINAGE PLAN
1475	C14.010A	MEADOW WOODS STATION DRAINAGE PLAN
1476	C14.010B	MEADOW WOODS STATION DRAINAGE PLAN
1477	C14.010C	MEADOW WOODS STATION DRAINAGE PLAN
1478	C14.010D	MEADOW WOODS STATION DRAINAGE PLAN
1479	C14.010E	MEADOW WOODS STATION DRAINAGE PLAN
1480	C14.010F	MEADOW WOODS STATION DRAINAGE PLAN
1481	C14.010I	MEADOW WOODS STATION DRAINAGE DETAIL
1482	C14.010J	MEADOW WOODS STATION DRAINAGE DETAIL
1483	C14.010K	MEADOW WOODS STATION DRAINAGE STRUCTURES SUMMARY
1484	C14.010L	MEADOW WOODS STATION DRAINAGE STRUCTURES SUMMARY
1485	C14.010R	MEADOW WOODS STATION POND 1 CROSS SECTION
1486	C14.010S	MEADOW WOODS STATION POND 1 CROSS SECTION
1487	C14.010T	MEADOW WOODS STATION POND 2 CROSS SECTION
1488	C14.010U	MEADOW WOODS STATION POND 2 CROSS SECTION
1489	C14.014B	MEADOW WOODS STATION TYPICAL SECTION
1490	C14.014C	MEADOW WOODS STATION ROADWAY CROSS SECTIONS
1491	C14.014D	MEADOW WOODS STATION ROADWAY CROSS SECTIONS
1492	C14.018A	MEADOW WOODS STATION BORING LOCATION PLAN
1493	C14.018B	MEADOW WOODS STATION BORING LOCATION PLAN
1494	C14.018C	MEADOW WOODS STATION SOIL SURVEY
1495	C14.018D	MEADOW WOODS STATION ROADWAY AUGER BORING RESULTS
1496	C14.018E	MEADOW WOODS STATION POND AUGER BORING RESULTS
1497	C14.018F	MEADOW WOODS STATION PLATFORM SPT BORING RESULTS
1498	C14.018G	MEADOW WOODS STATION PLATFORM SPT BORING RESULTS
1499	C14.018H	MEADOW WOODS STATION MUCK PROBE RESULTS
1500	C14.018I	MEADOW WOODS STATION MUCK PROBE RESULTS
1501	C14.018J	MEADOW WOODS STATION POND 2 BERM CLAY CORE DETAIL
1502	C14.012A	MEADOW WOODS STATION SWPPP PLAN
1503	C14.012B	MEADOW WOODS STATION SWPPP PLAN
1504	C14.015	MEADOW WOODS STATION TRAFFIC CONTROL PLAN
1505	C14.011	MEADOW WOODS STATION UTILITY PLAN
1506	C14.011A	MEADOW WOODS STATION UTILITY PLAN

NOTICE: THE OFFICIAL RECORD OF THIS SHEET IS THE ELECTRONIC FILE SIGNED AND SEALED UNDER RULE 61G15-23.003, F.A.C.

REVISIONS

DATE	BY	DESCRIPTION	DATE	BY	DESCRIPTION

TRANSPORTATION

AECOM TECHNICAL SERVICES, Inc.
300 Colonial Center Pkwy, Suite 130
Lake Mary, FL. 32746
T 407.549.4200 F 407.549.4201
Certificate of Authorization No. 8115

DAVID S. BURWELL PE NO. 55853 www.aecom.com

STATE OF FLORIDA
DEPARTMENT OF TRANSPORTATION

ROAD NO.	COUNTY	FINANCIAL PROJECT ID
CFRC P2S	VARIOUS	423446-9-52-01

CENTRAL FLORIDA COMMUTER RAIL TRANSIT (CFCRT) PHASE 2 SOUTH

INDEX OF SHEETS

SHEET NO. 14

DRAWING NO.
C00.0010

SHEET NO.	DRAWING NO.	TITLE
1507	CI4.011B	MEADOW WOODS STATION UTILITY PLAN
1508	CI4.011C	MEADOW WOODS STATION UTILITY PLAN
1509	CI4.011D	MEADOW WOODS STATION UTILITY PLAN
1510	CI4.011E	MEADOW WOODS STATION UTILITY PLAN
1511	CI4.011F	MEADOW WOODS STATION UTILITY PLAN
1512	CI4.011G	MEADOW WOODS STATION OFFSITE UTILITY PLAN
1513	CI4.013	MEADOW WOODS STATION SIGNING AND MARKING PLAN
1514	CI4.013A	MEADOW WOODS STATION SIGNING AND MARKING PLAN
1515	CI4.013B	MEADOW WOODS STATION SIGNING AND MARKING PLAN
1516	CI4.013C	MEADOW WOODS STATION SIGNING AND MARKING PLAN
1517	CI4.013D	MEADOW WOODS STATION SIGNING AND MARKING PLAN
1518	CI4.013E	MEADOW WOODS STATION SIGNING AND MARKING PLAN
1519	CI4.013F	MEADOW WOODS STATION SIGNING AND MARKING PLAN
1520	HI4.007	MEADOW WOODS STATION HARDSCAPE PLAN
1521	HI4.007A	MEADOW WOODS STATION HARDSCAPE PLAN - 'A'
1522	HI4.007B	MEADOW WOODS STATION HARDSCAPE PLAN - 'B'
1523	HI4.007C	MEADOW WOODS STATION HARDSCAPE PLAN - 'C'
1524	HI4.007D	MEADOW WOODS STATION HARDSCAPE PLAN - 'D'
1525	HI4.007E	MEADOW WOODS STATION HARDSCAPE PLAN - 'E'
1526	HI4.007F	MEADOW WOODS STATION HARDSCAPE PLAN - 'F'
1527	HI4.007G	MEADOW WOODS STATION HARDSCAPE PLAN - 'G'
1528	HI4.007H	MEADOW WOODS STATION HARDSCAPE PLAN - 'H'
1529	HI4.007I	MEADOW WOODS STATION HARDSCAPE PLAN - 'I'
1530	HI4.007J	MEADOW WOODS STATION HARDSCAPE PLAN - 'J'
1531	HI4.007K	MEADOW WOODS STATION HARDSCAPE PLAN - 'K'
1532	HI4.007L	MEADOW WOODS STATION HARDSCAPE PLAN - 'L'
1533	HI4.007M	MEADOW WOODS STATION HARDSCAPE PLAN - 'M'
1534	HI4.007N	MEADOW WOODS STATION HARDSCAPE PLAN - 'N
1535	HI4.007O	MEADOW WOODS STATION HARDSCAPE PLAN - 'O'
1536	HI4.007P	MEADOW WOODS STATION HARDSCAPE PLAN - 'P'
1537	HI4.007Q	MEADOW WOODS STATION HARDSCAPE PLAN - 'Q'
1538	H20.722	HARDSCAPE DETAILS MATERIALS SCHEDULE
1539	LI4.007	MEADOW WOODS STATION LANDSCAPE PLAN
1540	LI4.007A	MEADOW WOODS STATION LANDSCAPE PLAN - 'A'
1541	LI4.007B	MEADOW WOODS STATION LANDSCAPE PLAN - 'B'
1542	LI4.007C	MEADOW WOODS STATION LANDSCAPE PLAN - 'C'
1543	LI4.007D	MEADOW WOODS STATION LANDSCAPE PLAN - 'D'
1544	LI4.007E	MEADOW WOODS STATION LANDSCAPE PLAN - 'E'
1545	LI4.007F	MEADOW WOODS STATION LANDSCAPE PLAN - 'F'
1546	L20.701	MEADOW WOODS STATION MASTER PLANT LIST
1547	IRI4.007	MEADOW WOODS STATION IRRIGATION PLAN
1548	IRI4.007A	MEADOW WOODS STATION IRRIGATION PLAN - 'A'
1549	IRI4.007B	MEADOW WOODS STATION IRRIGATION PLAN - 'B'
1550	IRI4.007C	MEADOW WOODS STATION IRRIGATION PLAN - 'C'
1551	IRI4.007D	MEADOW WOODS STATION IRRIGATION PLAN - 'D'
1552	IRI4.007E	MEADOW WOODS STATION IRRIGATION PLAN - 'E'
1553	IRI4.007F	MEADOW WOODS STATION IRRIGATION PLAN - 'F'
1554	IR20.701	MEADOW WOODS STATION IRRIGATION DETAILS
1555	IR20.702	MEADOW WOODS STATION IRRIGATION DETAILS
1556	IR20.703	MEADOW WOODS STATION IRRIGATION DETAILS
1557	IR20.704	MEADOW WOODS STATION IRRIGATION DETAILS
1558	AI4.201	MEADOW WOODS STATION PLATFORM PLAN 1
1559	AI4.202	MEADOW WOODS STATION PLATFORM PLAN 2
1560	AI4.301	MEADOW WOODS STATION REFLECTED CEILING PLAN 1
1561	AI4.302	MEADOW WOODS STATION REFLECTED CEILING PLAN 2
1562	AI4.501	MEADOW WOODS STATION ELEVATIONS
1563	AI4.502	MEADOW WOODS STATION ELEVATIONS
1564	SI4.201	MEADOW WOODS STATION FOUNDATION PLAN
1565	SI4.202	MEADOW WOODS STATION FOUNDATION PLAN
1566	SI4.203	MEADOW WOODS STATION SLAB IN-FILL PLAN
1567	SI4.204	MEADOW WOODS STATION SLAB IN-FILL PLAN
1568	SI4.205	MEADOW WOODS STATION FRAMING PLAN
1569	SI4.206	MEADOW WOODS STATION FRAMING PLAN
1570	EI4.001	MEADOW WOODS STATION ONE-LINE DIAGRAM & SCHEDULE
1571	EI4.002	MEADOW WOODS STATION SITE PLAN 1
1572	EI4.003	MEADOW WOODS STATION SITE PLAN 2
1573	EI4.004	MEADOW WOODS STATION SITE PLAN 3
1574	EI4.005	MEADOW WOODS STATION SITE PLAN 4
1575	EI4.201	MEADOW WOODS STATION ELECTRICAL PLAN 1
1576	EI4.202	MEADOW WOODS STATION ELECTRICAL PLAN 2
1577	EI4.301	MEADOW WOODS STATION LIGHTING PLAN 1
1578	EI4.302	MEADOW WOODS STATION LIGHTING PLAN 2
1579	PI4.101	MEADOW WOODS STATION PLUMBING SITE PLAN 1
1580	PI4.102	MEADOW WOODS STATION PLUMBING SITE PLAN 2
1581	PI4.201	MEADOW WOODS STATION PLATFORM PLUMBING PLAN 1
1582	PI4.202	MEADOW WOODS STATION PLATFORM PLUMBING PLAN 2
1583	PI4.203	MEADOW WOODS STATION PLUMBING DETAIL
1584	PI4.204	MEADOW WOODS STATION PLUMBING DETAIL
1585	PI4.205	MEADOW WOODS STATION PLUMBING DETAILS
1586	PI4.206	MEADOW WOODS STATION PLUMBING DETAILS
1587	PI4.720	MEADOW WOODS STATION WATER CONNECTION
1588	WI4.007	MEADOW WOODS STATION WAYFINDING PLAN
1589	WI4.007A	MEADOW WOODS STATION WAYFINDING PLAN - 'A'
1590	WI4.007B	MEADOW WOODS STATION WAYFINDING PLAN - 'B'
1591	WI4.007C	MEADOW WOODS STATION WAYFINDING PLAN - 'C'
1592	WI4.007D	MEADOW WOODS STATION WAYFINDING PLAN - 'D'
1593	WI4.007E	MEADOW WOODS STATION WAYFINDING PLAN - 'E'
1594	WI4.007F	MEADOW WOODS STATION WAYFINDING PLAN - 'F'
1595	WI4.201	MEADOW WOODS STATION WAYFINDING PLAN
1596	WI4.202	MEADOW WOODS STATION WAYFINDING PLAN
1597	WI4.700	MEADOW WOODS STATION GRAPHICS DETAILS
1598	WI4.701	MEADOW WOODS STATION GRAPHICS DETAILS
1599	WI4.702	MEADOW WOODS STATION GRAPHICS DETAILS
1600	WI4.703	MEADOW WOODS STATION GRAPHICS DETAILS
1601	WI4.704	MEADOW WOODS STATION GRAPHICS DETAILS
1602	WI4.705	MEADOW WOODS STATION GRAPHICS DETAILS
1603	WI4.706	MEADOW WOODS STATION GRAPHICS DETAILS
1604	WI4.707	MEADOW WOODS STATION GRAPHICS DETAILS
1605	WI4.708	MEADOW WOODS STATION GRAPHICS DETAILS
1606	W20.805A	MEADOW WOODS STATION MESSAGE SCHEDULE
1607	W20.805B	MEADOW WOODS STATION MESSAGE SCHEDULE
1608	MI4.301	MEADOW WOODS COMMUNICATIONS CEILING PLAN 1OF 2
1609	MI4.302	MEADOW WOODS COMMUNICATIONS CEILING PLAN 2 OF 2
1610	CI5.005	OSCEOLA PARKWAY STATION EXISTING SITE PLAN
1611	CI5.006	OSCEOLA PARKWAY STATION DEMOLITION PLAN
1612	CI5.006A	OSCEOLA PARKWAY STATION DEMOLITION PLAN
1613	CI5.006B	OSCEOLA PARKWAY STATION DEMOLITION PLAN
1614	CI5.006C	OSCEOLA PARKWAY STATION DEMOLITION PLAN
1615	CI5.006D	OSCEOLA PARKWAY STATION DEMOLITION PLAN
1616	CI5.006E	OSCEOLA PARKWAY STATION DEMOLITION PLAN
1617	CI5.006F	OSCEOLA PARKWAY STATION DEMOLITION PLAN
1618	CI5.010G	OSCEOLA PARKWAY STATION DETAILED DRAINAGE MAP
1619	CI5.010X	OSCEOLA PARKWAY STATION ENVIRONEMENTAL PLAN
1620	CI5.010Y	OSCEOLA PARKWAY STATION SUMMARY OF DRAINAGE STRUCTURES
1621	CI5.010Z	OSCEOLA PARKWAY STATION SUMMARY OF DRAINAGE STRUCTURES
1622	CI5.010AA	OSCEOLA PARKWAY STATION OPTIONAL MATERIALS TABULATION

NOTICE: THE OFFICIAL RECORD OF THIS SHEET IS THE ELECTRONIC FILE SIGNED AND SEALED UNDER RULE 61G15-23.003, F.A.C.

REVISIONS

DATE	BY	DESCRIPTION	DATE	BY	DESCRIPTION

TRANSPORTATION
AECOM TECHNICAL SERVICES, Inc.
300 Colonial Center Pkwy, Suite 130
Lake Mary, FL, 32746
T 407.549.4200 F 407.549.4201
Certificate of Authorization No. 8115
DAVID S. BURWELL PE NO. 55853 www.aecom.com

STATE OF FLORIDA
DEPARTMENT OF TRANSPORTATION

ROAD NO.	COUNTY	FINANCIAL PROJECT ID
CFRC P2S	VARIOUS	423446-9-52-01

CENTRAL FLORIDA COMMUTER RAIL TRANSIT (CFCRT) PHASE 2 SOUTH

INDEX OF SHEETS

SHEET NO. 15

DRAWING NO.

C00.00IP

SHEET NO.	DRAWING NO.	TITLE
1623	C15.007	OSCEOLA PARKWAY STATION PROPOSED SITE PLAN
1624	C15.007A	OSCEOLA PARKWAY STATION PROPOSED SITE PLAN
1625	C15.007B	OSCEOLA PARKWAY STATION PROPOSED SITE PLAN
1626	C15.007C	OSCEOLA PARKWAY STATION PROPOSED SITE PLAN
1627	C15.007D	OSCEOLA PARKWAY STATION PROPOSED SITE PLAN
1628	C15.007E	OSCEOLA PARKWAY STATION PROPOSED SITE PLAN
1629	C15.007F	OSCEOLA PARKWAY STATION PROPOSED SITE PLAN
1630	C15.0I4A	OSCEOLA PARKWAY STATION ROADWAY PLAN
1631	C15.008A	OSCEOLA PARKWAY STATION COORDINATE DATA
1632	C15.008B	OSCEOLA PARKWAY STATION COORDIANTE DATA
1633	C15.009	OSCEOLA PARKWAY STATION GRADING PLAN
1634	C15.009A	OSCEOLA PARKWAY STATION GRADING PLAN
1635	C15.009B	OSCEOLA PARKWAY STATION GRADING PLAN
1636	C15.009C	OSCEOLA PARKWAY STATION GRADING PLAN
1637	C15.009D	OSCEOLA PARKWAY STATION GRADING PLAN
1638	C15.009E	OSCEOLA PARKWAY STATION GRADING PLAN
1639	C15.009F	OSCEOLA PARKWAY STATION GRADING PLAN
1640	C15.0I0	OSCEOLA PARKWAY STATION DRAINAGE PLAN
1641	C15.0I0A	OSCEOLA PARKWAY STATION DRAINAGE PLAN
1642	C15.0I0B	OSCEOLA PARKWAY STATION DRAINAGE PLAN
1643	C15.0I0C	OSCEOLA PARKWAY STATION DRAINAGE PLAN
1644	C15.0I0D	OSCEOLA PARKWAY STATION DRAINAGE PLAN
1645	C15.0I0E	OSCEOLA PARKWAY STATION DRAINAGE PLAN
1646	C15.0I0F	OSCEOLA PARKWAY STATION DRAINAGE PLAN
1647	C15.0I0H	OSCEOLA PARKWAY STATION DRAINAGE DETAIL
1648	C15.0I0I	OSCEOLA PARKWAY STATION DRAINAGE DETAIL
1649	C15.0I0J	OSCEOLA PARKWAY STATION DRAINAGE DETAIL
1650	C15.0I0K	OSCEOLA PARKWAY STATION DRAINAGE DETAIL
1651	C15.0I0L	OSCEOLA PARKWAY STATION DRAINAGE DETAIL
1652	C15.0I0M	OSCEOLA PARKWAY STATION DRAINAGE DETAIL
1653	C15.I0IN	OSCEOLA PARKWAY STATION DRAINAGE DETAIL
1654	C15.0I00	OSCEOLA PARKWAY STATION DRAINAGE DETAIL
1655	C15.0I0P	OSCEOLA PARKWAY STATION DRAINAGE DETAIL
1656	C15.0I0Q	OSCEOLA PARKWAY STATION DRAINAGE DETAIL
1657	C15.0I0R	OSCEOLA PARKWAY STATION DRAINAGE DETAIL
1658	C15.0I0S	OSCEOLA PARKWAY STATION DRAINAGE DETAIL
1659	C15.0I0T	OSCEOLA PARKWAY STATION DRAINAGE DETAIL
1660	C15.0I0U	OSCEOLA PARKWAY STATION DRAINAGE DETAIL
1661	C15.0I0V	OSCEOLA PARKWAY STATION DRAINAGE STRUCTURES SUMMARY
1662	C15.0I0W	OSCEOLA PARKWAY STATION DRAINAGE STRUCTURES SUMMARY
1663	C15.0I0BB	OSCEOLA PARKWAY STATION POND ICROSS SECTIONS
1664	C15.0I0CC	OSCEOLA PARKWAY STATION POND ICROSS SECTIONS
1665	C15.0I8A	OSCEOLA PARKWAY STATION BORING LOCATION PLAN
1666	C15.0I8B	OSCEOLA PARKWAY STATION BORING LOCATION PLAN
1667	C15.0I8C	OSCEOLA PARKWAY STATION SOIL SURVEY
1668	C15.0I8D	OSCEOLA PARKWAY STATION ROADWAY AUGER BORING RESULTS
1669	C15.0I8E	OSCEOLA PARKWAY STATION POND AUGER BORING RESULTS
1670	C15.0I8F	OSCEOLA PARKWAY STATION ROADWAY SPT BORING RESULTS
1671	C15.0I8G	OSCEOLA PARKWAY STATION PLATFORM SPT BORING RESULTS
1672	C15.0I8H	OSCEOLA PARKWAY STATION PLATFORM SPT BORING RESULTS
1673	C15.0I8I	OSCEOLA PARKWAY STATION MUCK PROBE RESULTS
1674	C15.0I2A	OSCEOLA PARKWAY STATION SWPPP PLAN
1675	C15.0I2B	OSCEOLA PARKWAY STATION SWPPP PLAN
1676	C15.0I5	OSCEOLA PARKWAY STATION TRAFFIC CONTROL PLAN
1677	C15.0II	OSCEOLA PARKWAY STATION UTILITY PLAN
1678	C15.0IIA	OSCEOLA PARKWAY STATION UTILITY PLAN
1679	C15.0IIB	OSCEOLA PARKWAY STATION UTILITY PLAN
1680	C15.0IIC	OSCEOLA PARKWAY STATION UTILITY PLAN
1681	C15.0IID	OSCEOLA PARKWAY STATION UTILITY PLAN
1682	C15.0IIE	OSCEOLA PARKWAY STATION UTILITY PLAN
1683	C15.0IIF	OSCEOLA PARKWAY STATION UTILITY PLAN
1684	C15.0IIG	OSCEOLA PARKWAY STATION OFFSITE UTILITY PLAN
1685	C15.0I3	OSCEOLA PARKWAY STATION SIGNING AND MARKING PLAN
1686	C15.0I3A	OSCEOLA PARKWAY STATION SIGNING AND MARKING PLAN
1687	C15.0I3B	OSCEOLA PARKWAY STATION SIGNING AND MARKING PLAN
1688	C15.0I3C	OSCEOLA PARKWAY STATION SIGNING AND MARKING PLAN
1689	C15.0I3D	OSCEOLA PARKWAY STATION SIGNING AND MARKING PLAN
1690	C15.0I3E	OSCEOLA PARKWAY STATION SIGNING AND MARKING PLAN
1691	C15.0I3F	OSCEOLA PARKWAY STATION SIGNING AND MARKING PLAN
1692	HI5.007	OSCEOLA PARKWAY STATION HARDSCAPE PLAN
1693	HI5.007A	OSCEOLA PARKWAY STATION HARDSCAPE PLAN - 'A'
1694	HI5.007B	OSCEOLA PARKWAY STATION HARDSCAPE PLAN - 'B'
1695	HI5.007C	OSCEOLA PARKWAY STATION HARDSCAPE PLAN - 'C'
1696	HI5.007D	OSCEOLA PARKWAY STATION HARDSCAPE PLAN - 'D'
1697	HI5.007E	OSCEOLA PARKWAY STATION HARDSCAPE PLAN - 'E'
1698	HI5.007F	OSCEOLA PARKWAY STATION HARDSCAPE PLAN - 'F'
1699	HI5.007G	OSCEOLA PARKWAY STATION HARDSCAPE PLAN - 'G'
1700	HI5.007H	OSCEOLA PARKWAY STATION HARDSCAPE PLAN - 'H'
1701	HI5.007I	OSCEOLA PARKWAY STATION HARDSCAPE PLAN - 'I'
1702	HI5.007J	OSCEOLA PARKWAY STATION HARDSCAPE PLAN - 'J'
1703	HI5.007K	OSCEOLA PARKWAY STATION HARDSCAPE PLAN - 'K'
1704	HI5.007L	OSCEOLA PARKWAY STATION HARDSCAPE PLAN - 'L'
1705	HI5.007M	OSCEOLA PARKWAY STATION HARDSCAPE PLAN - 'M'
1706	HI5.007N	OSCEOLA PARKWAY STATION HARDSCAPE PLAN - 'N'
1707	HI5.007O	OSCEOLA PARKWAY STATION HARDSCAPE PLAN - 'O'
1708	H20.723	HARDSCAPE DETAILS MATERIALS SCHEDULE
1709	LI5.007	OSCEOLA PARKWAY STATION LANDSCAPE PLAN
1710	LI5.007A	OSCEOLA PARKWAY STATION LANDSCAPE PLAN - 'A'
1711	LI5.007B	OSCEOLA PARKWAY STATION LANDSCAPE PLAN - 'B'
1712	LI5.007C	OSCEOLA PARKWAY STATION LANDSCAPE PLAN - 'C'
1713	LI5.007D	OSCEOLA PARKWAY STATION LANDSCAPE PLAN - 'D'
1714	LI5.007E	OSCEOLA PARKWAY STATION LANDSCAPE PLAN - 'E'
1715	LI5.007F	OSCEOLA PARKWAY STATION LANDSCAPE PLAN - 'F'
1716	LI5.007G	OSCEOLA PARKWAY STATION LANDSCAPE PLAN - 'G'
1717	L20.702	OSCEOLA PARKWAY STATION MASTER PLANT LIST
1718	IRI5.007	OSCEOLA PARKWAY STATION IRRIGATION PLAN
1719	IRI5.007A	OSCEOLA PARKWAY STATION IRRIGATION PLAN - 'A'
1720	IRI5.007B	OSCEOLA PARKWAY STATION IRRIGATION PLAN - 'B'
1721	IRI5.007C	OSCEOLA PARKWAY STATION IRRIGATION PLAN - 'C'
1722	IRI5.007D	OSCEOLA PARKWAY STATION IRRIGATION PLAN - 'D'
1723	IRI5.007E	OSCEOLA PARKWAY STATION IRRIGATION PLAN - 'E'
1724	IRI5.007F	OSCEOLA PARKWAY STATION IRRIGATION PLAN - 'F'
1725	IRI5.007G	OSCEOLA PARKWAY STATION IRRIGATION PLAN - 'G'
1726	IR20.705	OSCEOLA PARKWAY STATION IRRIGATION DETAILS
1727	IR20.706	OSCEOLA PARKWAY STATION IRRIGATION DETAILS
1728	IR20.707	OSCEOLA PARKWAY STATION IRRIGATION DETAILS
1729	IR20.708	OSCEOLA PARKWAY STATION IRRIGATION NOTES
1730	AI5.201	OSCEOLA PARKWAY STATION PLATFORM PLAN 1
1731	AI5.202	OSCEOLA PARKWAY STATION PLATFORM PLAN 2
1732	AI5.301	OSCEOLA PARKWAY STATION PLATFORM REFLECTED CEILING PLAN 1
1733	AI5.302	OSCEOLA PARKWAY STATION PLATFORM REFLECTED CEILING PLAN 1
1734	AI5.501	OSCEOLA PARKWAY STATION ELEVATIONS
1735	AI5.502	OSCEOLA PARKWAY STATION ELEVATIONS
1736	SI5.201	OSCEOLA PARKWAY PLATFORM FOUNDATION PLAN
1737	SI5.202	OSCEOLA PARKWAY PLATFORM FOUNDATION PLAN
1738	SI5.203	OSCEOLA PARKWAY STATION SLAB IN-FILL PLAN

NOTICE: THE OFFICIAL RECORD OF THIS SHEET IS THE ELECTRONIC FILE SIGNED AND SEALED UNDER RULE 6GI5-23.003, F.A.C.

REVISIONS

DATE	BY	DESCRIPTION	DATE	BY	DESCRIPTION

TRANSPORTATION

AECOM TECHNICAL SERVICES, Inc.
300 Colonial Center Pkwy, Suite 130
Lake Mary, FL. 32746
T 407.549.4200 F 407.549.4201
Certificate of Authorization No. 8115

DAVID S. BURWELL PE NO. 55853 www.aecom.com

STATE OF FLORIDA
DEPARTMENT OF TRANSPORTATION

ROAD NO.	COUNTY	FINANCIAL PROJECT ID
CFRC P2S	VARIOUS	423446-9-52-01

CENTRAL FLORIDA COMMUTER RAIL TRANSIT (CFCRT) PHASE 2 SOUTH

INDEX OF SHEETS

SHEET NO. 16

DRAWING NO.
C00.001Q

SHEET NO.	DRAWING NO.	TITLE
1739	S15.204	OSCEOLA PARKWAY STATION SLAB IN-FILL PLAN
1740	S15.205	OSCEOLA PARKWAY STATION FRAMING PLAN
1741	S15.206	OSCEOLA PARKWAY STATION FRAMING PLAN
1742	E15.001	OSCEOLA PARKWAY STATION ONE-LINE DIAGRAM & SCHEDULES
1743	E15.002	OSCEOLA PARKWAY STATION SITE PLAN 1
1744	E15.003	OSCEOLA PARKWAY STATION SITE PLAN 2
1745	E15.004	OSCEOLA PARKWAY STATION SITE PLAN 3
1746	E15.201	OSCEOLA PARKWAY STATION ELECTRICAL PLAN 1
1747	E15.202	OSCEOLA PARKWAY STATION ELECTRICAL PLAN 2
1748	E15.301	OSCEOLA PARKWAY STATION LIGHTING PLAN 1
1749	E15.302	OSCEOLA PARKWAY STATION LIGHTING PLAN 2
1750	P15.101	OSCEOLA PARKWAY STATION PLUMBING SITE PLAN
1751	P15.201	OSCEOLA PARKWAY STATION PLATFORM PLUMBING PLAN 1
1752	P15.202	OSCEOLA PARKWAY STATION PLATFORM PLUMBING PLAN 2
1753	P15.203	OSCEOLA PARKWAY STATION PLUMBING DETAIL
1754	P15.204	OSCEOLA PARKWAY STATION PLUMBING DETAIL
1755	P15.205	OSCEOLA PARKWAY STATION PLUMBING DETAILS
1756	P15.206	OSCEOLA PARKWAY STATION PLUMBING DETAILS
1757	P15.720	OSCEOLA PARKWAY STATION WATER CONNECTION
1758	W15.007	OSCEOLA PARKWAY STATION GRAPHICS PLAN
1759	W15.007A	OSCEOLA PARKWAY STATION GRAPHICS PLAN - 'A'
1760	W15.007B	OSCEOLA PARKWAY STATION GRAPHICS PLAN - 'B'
1761	W15.007C	OSCEOLA PARKWAY STATION GRAPHICS PLAN - 'C'
1762	W15.007D	OSCEOLA PARKWAY STATION GRAPHICS PLAN - 'D'
1763	W15.007E	OSCEOLA PARKWAY STATION GRAPHICS PLAN - 'E'
1764	W15.007F	OSCEOLA PARKWAY STATION GRAPHICS PLAN - 'F'
1765	W15.007G	OSCEOLA PARKWAY STATION GRAPHICS PLAN - 'G'
1766	W15.201	OSCEOLA PARKWAY STATION GRAPHICS PLAN
1767	W15.202	OSCEOLA PARKWAY STATION GRAPHICS PLAN
1768	W15.700	OSCEOLA PARKWAY STATION GRAPHICS DETAILS
1769	W15.701	OSCEOLA PARKWAY STATION GRAPHICS DETAILS
1770	W15.702	OSCEOLA PARKWAY STATION GRAPHICS DETAILS
1771	W15.703	OSCEOLA PARKWAY STATION GRAPHICS DETAILS
1772	W15.704	OSCEOLA PARKWAY STATION GRAPHICS DETAILS
1773	W15.705	OSCEOLA PARKWAY STATION GRAPHICS DETAILS
1774	W15.706	OSCEOLA PARKWAY STATION GRAPHICS DETAILS
1775	W15.707	OSCEOLA PARKWAY STATION GRAPHICS DETAILS
1776	W15.708	OSCEOLA PARKWAY STATION GRAPHICS DETAILS
1777	W20.806A	OSCEOLA PARKWAY STATION MESSAGE SCHEDULE
1778	W20.806B	OSCEOLA PARKWAY STATION MESSAGE SCHEDULE
1779	M15.301	OSCEOLA COMMUNICATION CEILING PLAN 1OF 2
1780	M15.302	OSCEOLA COMMUNICATION CEILING PLAN 2 OF 2
1781	C16.005	KISSIMMEE STATION EXISTING SITE PLAN
1782	C16.006	KISSIMMEE STATION DEMOLITION PLAN
1783	C16.006C	KISSIMMEE STATION DEMOLITION PLAN
1784	C16.006D	KISSIMMEE STATION DEMOLITION PLAN
1785	C16.010C	KISSIMMEE STATION DRAINAGE MAP
1786	C16.010E	KISSIMMEE STATION SUMMARY OF DRAINAGE STRUCTURES
1787	C16.010F	KISSIMMEE STATION OPTIONAL MATERIALS TABULATION
1788	C16.007	KISSIMMEE STATION PROPOSED SITE PLAN
1789	C16.007C	KISSIMMEE STATION PROPOSED SITE PLAN
1790	C16.007D	KISSIMMEE STATION PROPOSED SITE PLAN
1791	C16.008A	KISSIMMEE STATION COORDINATE DATA
1792	C16.009	KISSIMMEE STATION GRADING PLAN
1793	C16.009C	KISSIMMEE STATION GRADING PLAN
1794	C16.009D	KISSIMMEE STATION GRADING PLAN
1795	C16.010	KISSIMMEE STATION DRAINAGE PLAN
1796	C16.010A	KISSIMMEE STATION DRAINAGE PLAN

SHEET NO.	DRAWING NO.	TITLE
1797	C16.010B	KISSIMMEE STATION DRAINAGE PLAN
1798	C16.010D	KISSIMMEE STATION DRAINAGE STRUCTURES SUMMARY
1799	C16.018A	KISSIMMEE STATION BORING LOCATION PLAN
1800	C16.018B	KISSIMMEE STATION SOIL SURVEY
1801	C16.018C	KISSIMMEE STATION ROADWAY AUGER BORING RESULTS
1802	C16.018D	KISSIMMEE STATION PLATFORM SPT BORING RESULTS
1803	C16.018E	KISSIMMEE STATION PLATFORM SPT BORING RESULTS
1804	C16.012A	KISSIMMEE STATION SWPPP PLAN
1805	C16.012B	KISSIMMEE STATION SWPPP PLAN
1806	C16.011	KISSIMMEE STATION UTILITY PLAN
1807	C16.011C	KISSIMMEE STATION UTILITY PLAN
1808	C16.011D	KISSIMMEE STATION UTILITY PLAN
1809	C16.013	KISSIMMEE STATION SIGNING AND MARKING PLAN
1810	C16.013C	KISSIMMEE STATION SIGNING AND MARKING PLAN
1811	C16.013D	KISSIMMEE STATION SIGNING AND MARKING PLAN
1812	H16.007	KISSIMMEE STATION HARDSCAPE PLAN
1813	H16.007C	KISSIMMEE STATION HARDSCAPE PLAN - 'C'
1814	H16.007D	KISSIMMEE STATION HARDSCAPE PLAN - 'D'
1815	H16.007E	KISSIMMEE STATION HARDSCAPE PLAN - 'E'
1816	H16.007F	KISSIMMEE STATION HARDSCAPE PLAN - 'F'
1817	H20.724	HARDSCAPE DETAILS MATERIALS SCHEDULE
1818	L16.006	KISSIMMEE STATION TREE SAVE PLAN
1819	L16.006C	KISSIMMEE STATION TREE SAVE PLAN - 'C'
1820	L16.006D	KISSIMMEE STATION TREE SAVE PLAN - 'D'
1821	L16.007	KISSIMMEE STATION LANDSCAPE PLAN
1822	L16.007C	KISSIMMEE STATION LANDSCAPE PLAN - 'C'
1823	L16.007D	KISSIMMEE STATION LANDSCAPE PLAN - 'D'
1824	L20.703	KISSIMMEE STATION MASTER PLANT LIST
1825	IR16.007	KISSIMMEE STATION IRRIGATION PLAN
1826	IR16.007C	KISSIMMEE STATION IRRIGATION PLAN - 'C'
1827	IR16.007D	KISSIMMEE STATION IRRIGATION PLAN - 'D'
1828	IR16.709	KISSIMMEE STATION IRRIGATION DETAILS
1829	IR16.710	KISSIMMEE STATION IRRIGATION DETAILS
1830	IR16.711	KISSIMMEE STATION IRRIGATION DETAILS
1831	IR16.712	KISSIMMEE STATION IRRIGATION NOTES
1832	A16.201	KISSIMMEE STATION PLATFORM PLAN 1
1833	A16.202	KISSIMMEE STATION PLATFORM PLAN 2
1834	A16.301	KISSIMMEE STATION REFLECTED CEILING PLAN 1
1835	A16.302	KISSIMMEE STATION REFLECTED CEILING PLAN 2
1836	A16.401	KISSIMMEE STATION ROOF PLAN 1
1837	A16.402	KISSIMMEE STATION ROOF PLAN 2
1838	A16.501	KISSIMMEE STATION ELEVATIONS
1839	A16.502	KISSIMMEE STATION ELEVATIONS
1840	S16.201	KISSIMMEE STATION FOUNDATION PLAN
1841	S16.202	KISSIMMEE STATION FOUNDATION PLAN
1842	S16.203	KISSIMMEE STATION SLAB IN-FILL PLAN
1843	S16.204	KISSIMMEE STATION SLAB IN-FILL PLAN
1844	S16.205	KISSIMMEE STATION FRAMING PLAN
1845	S16.206	KISSIMMEE STATION FRAMING PLAN
1846	S16.207	KISSIMMEE STATION FRAMING PLAN
1847	S16.208	KISSIMMEE STATION FRAMING PLAN
1848	E16.001	KISSIMMEE STATION ONE-LINE DIAGRAM & SCHEDULES
1849	E16.002	KISSIMMEE STATION ELECTRICAL SITE PLAN
1850	E16.201	KISSIMMEE STATION ELECTRICAL PLAN 1
1851	E16.202	KISSIMMEE STATION ELECTRICAL PLAN 2
1852	E16.301	KISSIMMEE STATION LIGHTING PLAN 1
1853	E16.302	KISSIMMEE STATION LIGHTING PLAN 2
1854	P16.101	KISSIMMEE STATION PLUMBING SITE PLAN 1

NOTICE: THE OFFICIAL RECORD OF THIS SHEET IS THE ELECTRONIC FILE SIGNED AND SEALED UNDER RULE 61G15-23.003, F.A.C.

REVISIONS

DATE	BY	DESCRIPTION	DATE	BY	DESCRIPTION

TRANSPORTATION
AECOM TECHNICAL SERVICES, Inc.
300 Colonial Center Pkwy, Suite 130
Lake Mary, FL. 32746
T 407.549.4200 F 407.549.4201
Certificate of Authorization No. 8115
DAVID S. BURWELL PE NO. 55853 www.aecom.com

STATE OF FLORIDA
DEPARTMENT OF TRANSPORTATION

ROAD NO.	COUNTY	FINANCIAL PROJECT ID
CFRC P2S	VARIOUS	423446-9-52-01

CENTRAL FLORIDA COMMUTER RAIL TRANSIT (CFCRT) PHASE 2 SOUTH

INDEX OF SHEETS

SHEET NO. 17

SHEET NO.	DRAWING NO.	TITLE
1855	PI6.102	KISSIMMEE STATION PLUMBING SITE PLAN 2
1856	PI6.201	KISSIMMEE STATION PLATFORM PLUMBING PLAN 1
1857	PI6.202	KISSIMMEE STATION PLATFORM PLUMBING PLAN 2
1858	PI6.203	KISSIMMEE STATION PLUMBING DETAIL
1859	PI6.204	KISSIMMEE STATION PLUMBING DETAIL
1860	PI6.205	KISSIMMEE STATION PLUMBING DETAILS
1861	PI6.206	KISSIMMEE STATION PLUMBING DETAILS
1862	PI6.720	KISSIMMEE STATION WATER CONNECTION
1863	WI6.007	KISSIMMEE STATION WAYFINDING PLAN
1864	WI6.007C	KISSIMMEE STATION WAYFINDING PLAN - 'C'
1865	WI6.007D	KISSIMMEE STATION WAYFINDING PLAN - 'D'
1866	WI6.201	KISSIMMEE STATION WAYFINDING PLAN
1867	WI6.202	KISSIMMEE STATION WAYFINDING PLAN
1868	WI6.700	KISSIMMEE STATION GRAPHICS DETAILS
1869	WI6.702	KISSIMMEE STATION GRAPHICS DETAILS
1870	WI6.704	KISSIMMEE STATION GRAPHICS DETAILS
1871	WI6.705	KISSIMMEE STATION GRAPHICS DETAILS
1872	WI6.706	KISSIMMEE STATION GRAPHICS DETAILS
1873	WI6.707	KISSIMMEE STATION GRAPHICS DETAILS
1874	WI6.708	KISSIMMEE STATION GRAPHICS DETAILS
1875	WI6.709	KISSIMMEE STATION GRAPHICS DETAILS
1876	WI6.710	KISSIMMEE STATION GRAPHICS DETAILS
1877	WI6.711	KISSIMMEE STATION GRAPHICS DETAILS
1878	W20.807	KISSIMMEE STATION MESSAGE SCHEDULE
1879	MI6.301	KISSIMMEE COMMUNICATION CEILING PLAN 1OF 2
1880	MI6.302	KISSIMMEE COMMUNICATION CEILING PLAN 1OF 3
1881	CI7.005	POINCIANA STATION EXISTING SITE PLAN
1882	CI7.006	POINCIANA STATION DEMOLITION PLAN
1883	CI7.006A	POINCIANA STATION DEMOLITION PLAN
1884	CI7.006B	POINCIANA STATION DEMOLITION PLAN
1885	CI7.006C	POINCIANA STATION DEMOLITION PLAN
1886	CI7.006D	POINCIANA STATION DEMOLITION PLAN
1887	CI7.006E	POINCIANA STATION DEMOLITION PLAN
1888	CI7.006F	POINCIANA STATION DEMOLITION PLAN
1889	CI7.006G	POINCIANA STATION DEMOLITION PLAN
1890	CI7.006H	POINCIANA STATION DEMOLITION PLAN
1891	CI7.0061	POINCIANA STATION DEMOLITION PLAN
1892	CI7.006J	POINCIANA STATION DEMOLITION PLAN
1893	CI7.010K	POINCIANA STATION DRAINAGE MAP
1894	CI7.010P	POINCIANA STATION ENVIRONMENTAL PLAN
1895	CI7.010Q	POINCIANA STATION SUMMARY OF DRAINAGE STRUCTURES
1896	CI7.010R	POINCIANA STATION SUMMARY OF DRAINAGE STRUCTURES
1897	CI7.010S	POINCIANA STATION SUMMARY OF DRAINAGE STRUCTURES
1898	CI7.010T	POINCIANA STATION OPTIONAL MATERIALS TABULATION
1899	CI7.007	POINCIANA STATION PROPOSED SITE PLAN
1900	CI7.007A	POINCIANA STATION PROPOSED SITE PLAN
1901	CI7.007B	POINCIANA STATION PROPOSED SITE PLAN
1902	CI7.007C	POINCIANA STATION PROPOSED SITE PLAN
1903	CI7.007D	POINCIANA STATION PROPOSED SITE PLAN
1904	CI7.007E	POINCIANA STATION PROPOSED SITE PLAN
1905	CI7.007F	POINCIANA STATION PROPOSED SITE PLAN
1906	CI7.007G	POINCIANA STATION PROPOSED SITE PLAN
1907	CI7.007H	POINCIANA STATION PROPOSED SITE PLAN
1908	CI7.0071	POINCIANA STATION PROPOSED SITE PLAN
1909	CI7.007J	POINCIANA STATION PROPOSED SITE PLAN
1910	CI7.014A	POINCIANA STATION ROADWAY PLAN
1911	CI7.014B	POINCIANA STATION ROADWAY PLAN
1912	CI7.008A	POINCIANA STATION COORDINATE DATA
1913	CI7.008B	POINCIANA STATION COORDINATE DATA
1914	CI7.009	POINCIANA STATION GRADING PLAN
1915	CI7.009A	POINCIANA STATION GRADING PLAN
1916	CI7.009B	POINCIANA STATION GRADING PLAN
1917	CI7.009C	POINCIANA STATION GRADING PLAN
1918	CI7.009D	POINCIANA STATION GRADING PLAN
1919	CI7.009E	POINCIANA STATION GRADING PLAN
1920	CI7.009F	POINCIANA STATION GRADING PLAN
1921	CI7.009G	POINCIANA STATION GRADING PLAN
1922	CI7.009H	POINCIANA STATION GRADING PLAN
1923	CI7.0091	POINCIANA STATION GRADING PLAN
1924	CI7.009J	POINCIANA STATION GRADING PLAN
1925	CI7.010	POINCIANA STATION DRAINAGE PLAN
1926	CI7.010A	POINCIANA STATION DRAINAGE SITE PLAN
1927	CI7.010B	POINCIANA STATION DRAINAGE PLAN
1928	CI7.010C	POINCIANA STATION DRAINAGE PLAN
1929	CI7.010D	POINCIANA STATION DRAINAGE PLAN
1930	CI7.010E	POINCIANA STATION DRAINAGE PLAN
1931	CI7.010F	POINCIANA STATION DRAINAGE PLAN
1932	CI7.010G	POINCIANA STATION DRAINAGE PLAN
1933	CI7.010H	POINCIANA STATION DRAINAGE PLAN
1934	CI7.010I	POINCIANA STATION DRAINAGE PLAN
1935	CI7.010J	POINCIANA STATION DRAINAGE PLAN
1936	CI7.010L	POINCIANA STATION DRAINAGE DETAIL
1937	CI7.010M	POINCIANA STATION DRAINAGE DETAIL
1938	CI7.010N	POINCIANA STATION DRAINAGE STRUCTURES SUMMARY
1939	CI7.010O	POINCIANA STATION DRAINAGE STRUCTURES SUMMARY
1940	CI7.010U	POINCIANA STATION POND 1CROSS SECTIONS
1941	CI7.010V	POINCIANA STATION POND 2 CROSS SECTIONS
1942	CI7.014C	POINCIANA STATION ROADWAY TYPICAL SECTION
1943	CI7.014D	POINCIANA STATION ROADWAY CROSS SECTION
1944	CI7.014E	POINCIANA STATION ROADWAY CROSS SECTION
1945	CI7.014F	POINCIANA STATION ROADWAY CROSS SECTION
1946	CI7.014G	POINCIANA STATION ROADWAY CROSS SECTION
1947	CI7.014H	POINCIANA STATION ROADWAY CROSS SECTION
1948	CI7.0141	POINCIANA STATION ROADWAY CROSS SECTION
1949	CI7.014J	POINCIANA STATION ROADWAY CROSS SECTION
1950	CI7.018A	POINCIANA STATION BORING LOCATION PLAN
1951	CI7.018B	POINCIANA STATION BORING LOCATION PLAN
1952	CI7.018C	POINCIANA STATION SOIL SURVEY
1953	CI7.018D	POINCIANA STATION ROADWAY AUGER BORING RESULTS
1954	CI7.018E	POINCIANA STATION POND AUGER BORING RESULTS
1955	CI7.018F	POINCIANA STATION POND AUGER BORING RESULTS
1956	CI7.018G	POINCIANA STATION PLATFORM SPT BORING RESULTS
1957	CI7.018H	POINCIANA STATION PLATFORM SPT BORING RESULTS
1958	CI7.012A	POINCIANA STATION SWPPP PLAN
1959	CI7.012B	POINCIANA STATION SWPPP PLAN
1960	CI7.015	POINCIANA STATION TRAFFIC CONTROL PLAN
1961	CI7.011	POINCIANA STATION UTILITY PLAN
1962	CI7.011A	POINCIANA STATION UTILITY PLAN
1963	CI7.011B	POINCIANA STATION UTILITY PLAN
1964	CI7.011C	POINCIANA STATION UTILITY PLAN
1965	CI7.011D	POINCIANA STATION UTILITY PLAN
1966	CI7.011E	POINCIANA STATION UTILITY PLAN
1967	CI7.011F	POINCIANA STATION UTILITY PLAN
1968	CI7.011G	POINCIANA STATION UTILITY PLAN
1969	CI7.011H	POINCIANA STATION UTILITY PLAN
1970	CI7.011I	POINCIANA STATION UTILITY PLAN

DRAWING NO.
C00.001R

NOTICE: THE OFFICIAL RECORD OF THIS SHEET IS THE ELECTRONIC FILE SIGNED AND SEALED UNDER RULE 61G15-23.003, F.A.C.

REVISIONS

DATE	BY	DESCRIPTION	DATE	BY	DESCRIPTION

TRANSPORTATION
AECOM TECHNICAL SERVICES, Inc.
300 Colonial Center Pkwy, Suite 130
Lake Mary, FL. 32746
T 407.549.4200 F 407.549.4201
Certificate of Authorization No. 8115
DAVID S. BURWELL PE NO. 55853 www.aecom.com

STATE OF FLORIDA
DEPARTMENT OF TRANSPORTATION

ROAD NO.	COUNTY	FINANCIAL PROJECT ID
CFRC P2S	VARIOUS	423446-9-52-01

CENTRAL FLORIDA COMMUTER RAIL TRANSIT (CFCRT) PHASE 2 SOUTH

INDEX OF SHEETS

SHEET NO. 18

DRAWING NO.
C00.001S

SHEET NO.	DRAWING NO.	TITLE
1971	CI7.011J	POINCIANA STATION UTILITY PLAN
1972	CI7.011K	POINCIANA STATION OFFSITE UTILITY PLAN
1973	CI7.011L	POINCIANA STATION OFFSITE UTILITY PLAN
1974	CI7.013	POINCIANA STATION SIGNING AND MARKING PLAN
1975	CI7.013A	POINCIANA STATION SIGNING AND MARKING PLAN
1976	CI7.013B	POINCIANA STATION SIGNING AND MARKING PLAN
1977	CI7.013C	POINCIANA STATION SIGNING AND MARKING PLAN
1978	CI7.013D	POINCIANA STATION SIGNING AND MARKING PLAN
1979	CI7.013E	POINCIANA STATION SIGNING AND MARKING PLAN
1980	CI7.013F	POINCIANA STATION SIGNING AND MARKING PLAN
1981	CI7.013G	POINCIANA STATION SIGNING AND MARKING PLAN
1982	CI7.013H	POINCIANA STATION SIGNING AND MARKING PLAN
1983	CI7.0131	POINCIANA STATION SIGNING AND MARKING PLAN
1984	CI7.013J	POINCIANA STATION SIGNING AND MARKING PLAN
1985	CI7.016A	POINCIANA STATION OFFSITE SAPM PLAN
1986	CI7.016B	POINCIANA STATION OFFSITE SAPM PLAN
1987	HI7.007	POINCIANA STATION HARDSCAPE PLAN
1988	HI7.007A	POINCIANA STATION HARDSCAPE PLAN - 'A'
1989	HI7.007B	POINCIANA STATION HARDSCAPE PLAN - 'B'
1990	HI7.007C	POINCIANA STATION HARDSCAPE PLAN - 'C'
1991	HI7.007D	POINCIANA STATION HARDSCAPE PLAN - 'D'
1992	HI7.007E	POINCIANA STATION HARDSCAPE PLAN - 'E'
1993	HI7.007F	POINCIANA STATION HARDSCAPE PLAN - 'F'
1994	HI7.007G	POINCIANA STATION HARDSCAPE PLAN - 'G'
1995	HI7.007H	POINCIANA STATION HARDSCAPE PLAN - 'H'
1996	HI7.0071	POINCIANA STATION HARDSCAPE PLAN - 'I'
1997	HI7.007J	POINCIANA STATION HARDSCAPE PLAN - 'J'
1998	HI7.007K	POINCIANA STATION HARDSCAPE PLAN - 'K'
1999	HI7.007L	POINCIANA STATION HARDSCAPE PLAN - 'L'
2000	HI7.007M	POINCIANA STATION HARDSCAPE PLAN - 'M'
2001	HI7.007N	POINCIANA STATION HARDSCAPE PLAN - 'N'
2002	HI7.007O	POINCIANA STATION HARDSCAPE PLAN - 'O'
2003	HI7.007P	POINCIANA STATION HARDSCAPE PLAN - 'P'
2004	HI7.007Q	POINCIANA STATION HARDSCAPE PLAN - 'Q'
2005	HI7.007R	POINCIANA STATION HARDSCAPE PLAN - 'R'
2006	H20.725	HARDSCAPE DETAILS MATERIALS SCHEDULE
2007	LI7.006	POINCIANA STATION TREE SAVE PLAN
2008	LI7.006A	POINCIANA STATION TREE SAVE PLAN - 'A'
2009	LI7.006B	POINCIANA STATION TREE SAVE PLAN - 'B'
2010	LI7.006C	POINCIANA STATION TREE SAVE PLAN - 'C'
2011	LI7.006D	POINCIANA STATION TREE SAVE PLAN - 'D'
2012	LI7.006E	POINCIANA STATION TREE SAVE PLAN - 'E'
2013	LI7.006F	POINCIANA STATION TREE SAVE PLAN - 'F'
2014	LI7.006G	POINCIANA STATION TREE SAVE PLAN - 'G'
2015	LI7.006H	POINCIANA STATION TREE SAVE PLAN - 'H'
2016	LI7.0061	POINCIANA STATION TREE SAVE PLAN - 'I'
2017	LI7.006J	POINCIANA STATION TREE SAVE PLAN - 'J'
2018	LI7.007	POINCIANA STATION LANDSCAPE PLAN
2019	LI7.007A	POINCIANA STATION LANDSCAPE PLAN - 'A'
2020	LI7.007B	POINCIANA STATION LANDSCAPE PLAN - 'B'
2021	LI7.007C	POINCIANA STATION LANDSCAPE PLAN - 'C'
2022	LI7.007D	POINCIANA STATION LANDSCAPE PLAN - 'D'
2023	LI7.007E	POINCIANA STATION LANDSCAPE PLAN - 'E'
2024	LI7.007F	POINCIANA STATION LANDSCAPE PLAN - 'F'
2025	LI7.007G	POINCIANA STATION LANDSCAPE PLAN - 'G'
2026	LI7.007H	POINCIANA STATION LANDSCAPE PLAN - 'H'
2027	LI7.0071	POINCIANA STATION LANDSCAPE PLAN - 'I'
2028	LI7.007J	POINCIANA STATION LANDSCAPE PLAN - 'J'

SHEET NO.	DRAWING NO.	TITLE
2029	L20.704	POINCIANA STATION MASTER PLANT LIST
2030	IRI7.007	POINCIANA STATION IRRIGATION PLAN
2031	IRI7.007A	POINCIANA STATION IRRIGATION PLAN - 'A'
2032	IRI7.007B	POINCIANA STATION IRRIGATION PLAN - 'B'
2033	IRI7.007C	POINCIANA STATION IRRIGATION PLAN - 'C'
2034	IRI7.007D	POINCIANA STATION IRRIGATION PLAN - 'D'
2035	IRI7.007E	POINCIANA STATION IRRIGATION PLAN - 'E'
2036	IRI7.007F	POINCIANA STATION IRRIGATION PLAN - 'F'
2037	IRI7.007G	POINCIANA STATION IRRIGATION PLAN - 'G'
2038	IRI7.007H	POINCIANA STATION IRRIGATION PLAN - 'H'
2039	IRI7.0071	POINCIANA STATION IRRIGATION PLAN - 'I'
2040	IRI7.007J	POINCIANA STATION IRRIGATION PLAN - 'J'
2041	IR20.713	POINCIANA STATION IRRIGATION DETAILS
2042	IR20.714	POINCIANA STATION IRRIGATION DETAILS
2043	IR20.715	POINCIANA STATION IRRIGATION DETAILS
2044	IR20.716	POINCIANA STATION IRRIGATION NOTES
2045	AI7.201	POINCIANA STATION PLATFORM PLAN 1
2046	AI7.202	POINCIANA STATION PLATFORM PLAN 2
2047	AI7.301	POINCIANA STATION REFLECTED CEILING PLAN 1
2048	AI7.302	POINCIANA STATION REFLECTED CEILING PLAN 2
2049	AI7.501	POINCIANA STATION ELEVATIONS
2050	AI7.502	POINCIANA STATION ELEVATIONS
2051	SI7.201	POINCIANA STATION FOUNDATION PLAN
2052	SI7.202	POINCIANA STATION FOUNDATION PLAN
2053	SI7.203	POINCIANA STATION SLAB IN-FILL PLAN
2054	SI7.204	POINCIANA STATION SLAB IN-FILL PLAN
2055	SI7.205	POINCIANA STATION FRAMING PLAN
2056	SI7.206	POINCIANA STATION FRAMING PLAN
2057	EI7.001	POINCIANA STATION ONE-LINE DIAGRAM & SCHEDULES
2058	EI7.002	POINCIANA STATION OVERALL ELECTRICAL SITE
2059	EI7.003	POINCIANA STATION ELECTRICAL SITE PLAN 1
2060	EI7.004	POINCIANA STATION SITE PLAN 2
2061	EI7.005	POINCIANA STATION SITE PLAN 3
2062	EI7.006	POINCIANA STATION SITE PLAN 4
2063	EI7.007	POINCIANA STATION SITE PLAN 5
2064	EI7.008	POINCIANA STATION SITE PLAN 6
2065	EI7.009	POINCIANA STATION SITE PLAN 7
2066	EI7.010	POINCIANA STATION SITE PLAN 8
2067	EI7.201	POINCIANA STATION ELECTRICAL PLAN 1
2068	EI7.202	POINCIANA STATION ELECTRICAL PLAN 2
2069	EI7.301	POINCIANA STATION LIGHTING PLAN 1
2070	EI7.302	POINCIANA STATION LIGHTING PLAN 2
2071	PI7.101	POINCIANA STATION PLUMBING SITE PLAN 1
2072	PI7.102	POINCIANA STATION PLUMBING SITE PLAN 2
2073	PI7.103	POINCIANA STATION PLUMBING SITE PLAN 3
2074	PI7.201	POINCIANA STATION PLATFORM PLUMBING PLAN 1
2075	PI7.202	POINCIANA STATION PLATFORM PLUMBING PLAN 2
2076	PI7.203	POINCIANA STATION PLUMBING DETAIL
2077	PI7.204	POINCIANA STATION PLUMBING DETAIL
2078	PI7.205	POINCIANA STATION PLUMBING DETAILS
2079	PI7.206	POINCIANA STATION PLUMBING DETAILS
2080	PI7.720	POINCIANA STATION WATER CONNECTION
2081	WI7.007	POINCIANA STATION WAYFINDING PLAN
2082	WI7.007A	POINCIANA STATION WAYFINDING PLAN - 'A'
2083	WI7.007B	POINCIANA STATION WAYFINDING PLAN - 'B'
2084	WI7.007C	POINCIANA STATION WAYFINDING PLAN - 'C'
2085	WI7.007D	POINCIANA STATION WAYFINDING PLAN - 'D'
2086	WI7.007E	POINCIANA STATION WAYFINDING PLAN - 'E'

NOTICE: THE OFFICIAL RECORD OF THIS SHEET IS THE ELECTRONIC FILE SIGNED AND SEALED UNDER RULE 61G15-23.003, F.A.C.

REVISIONS

DATE	BY	DESCRIPTION	DATE	BY	DESCRIPTION

TRANSPORTATION
AECOM TECHNICAL SERVICES, Inc.
300 Colonial Center Pkwy, Suite 130
Lake Mary, FL. 32746
T 407.549.4200 F 407.549.4201
Certificate of Authorization No. 8115
DAVID S. BURWELL PE NO. 55853 www.aecom.com

STATE OF FLORIDA
DEPARTMENT OF TRANSPORTATION

ROAD NO.	COUNTY	FINANCIAL PROJECT ID
CFRC P2S	VARIOUS	423446-9-52-01

CENTRAL FLORIDA COMMUTER RAIL TRANSIT (CFCRT) PHASE 2 SOUTH

INDEX OF SHEETS

SHEET NO. 19

DRAWING NO.
C00.00IT

SHEET NO.	DRAWING NO.	TITLE
2087	WI7.007F	POINCIANA STATION WAYFINDING PLAN - 'F'
2088	WI7.007G	POINCIANA STATION WAYFINDING PLAN - 'G'
2089	WI7.007H	POINCIANA STATION WAYFINDING PLAN - 'H'
2090	WI7.007I	POINCIANA STATION WAYFINDING PLAN - 'I'
2091	WI7.007J	POINCIANA STATION WAYFINDING PLAN - 'J'
2092	WI7.201	POINCIANA STATION WAYFINDING PLAN
2093	WI7.202	POINCIANA STATION WAYFINDING PLAN
2094	WI7.700	POINCIANA STATION GRAPHICS DETAILS
2095	WI7.701	POINCIANA STATION GRAPHICS DETAILS
2096	WI7.702	POINCIANA STATION GRAPHICS DETAILS
2097	WI7.703	POINCIANA STATION GRAPHICS DETAILS
2098	WI7.704	POINCIANA STATION GRAPHICS DETAILS
2099	WI7.705	POINCIANA STATION GRAPHICS DETAILS
2100	WI7.706	POINCIANA STATION GRAPHICS DETAILS
2101	WI7.707	POINCIANA STATION GRAPHICS DETAILS
2102	WI7.708	POINCIANA STATION GRAPHICS DETAILS
2103	W20.808	POINCIANA STATION MESSAGE SCHEDULE
2104	MI7.301	POINCIANA COMMUNICATION CEILING PLAN 1 OF 2
2105	MI7.302	POINCIANA COMMUNICATION CEILING PLAN 2 OF 2
2106	CI8.007	VSLMF PROPOSED SITE PLAN
2107	CI8.007A	VSLMF PROPOSED SITE PLAN
2108	CI8.007B	VSLMF PROPOSED SITE PLAN
2109	CI8.007C	VSLMF PROPOSED SITE PLAN
2110	CI8.007D	VSLMF PROPOSED SITE PLAN
2111	CI8.007E	VSLMF PROPOSED SITE PLAN
2112	CI8.009	VSLMF GRADING PLAN
2113	CI8.009A	VSLMF GRADING PLAN
2114	CI8.009B	VSLMF GRADING PLAN
2115	CI8.009C	VSLMF GRADING PLAN
2116	CI8.009D	VSLMF GRADING PLAN
2117	CI8.009E	VSLMF GRADING PLAN
2118	CI8.018A	POINCIANA VSLMF BORING LOCATION PLAN
2119	CI8.018B	POINCIANA VSLMF BORING LOCATION PLAN
2120	CI8.018C	POINCIANA VSLMF BORING LOCATION PLAN
2121	CI8.018D	POINCIANA VSLMF BORING LOCATION PLAN
2122	CI8.018E	POINCIANA VSLMF SOIL SURVEY
2123	CI8.018F	POINCIANA VSLMF TRACK AUGER BORING RESULTS
2124	CI8.018G	POINCIANA VSLMF TRACK AUGER BORING RESULTS
2125	CI8.018H	POINCIANA VSLMF SPT BORING RESULTS
2126	CI8.013	VSLMF SIGNING AND MARKING PLAN
2127	CI8.013A	VSLMF SIGNING AND MARKING PLAN
2128	CI8.013B	VSLMF SIGNING AND MARKING PLAN
2129	CI8.013C	VSLMF SIGNING AND MARKING PLAN
2130	CI8.013D	VSLMF SIGNING AND MARKING PLAN
2131	CI8.013E	VSLMF SIGNING AND MARKING PLAN
2132	AI8.101	VSLMF - CREW BUILDING LIFE SAFETY PLAN
2133	AI8.201	VSLMF - CREW BUILDING PLAN
2134	AI8.202	VSLMF - CREW BUILDING ROOF PLAN
2135	AI8.203	VSLMF - CREW BUILDING PARTITION TYPES
2136	AI8.206	VSLMF - CREW BUILDING PARTITION DETAILS
2137	AI8.207	VSLMF - CREW BUILDING PARTITION DETAILS
2138	AI8.208	VSLMF - CREW BUILDING PARTITION DETAILS
2139	AI8.301	VSLMF - CREW BUILDING RCP
2140	AI8.401	VSLMF - CREW BUILDING EXTERIOR ELEVATIONS
2141	AI8.501	VSLMF - CREW BUILDING BUILDING SECTIONS
2142	AI8.502	VSLMF - CREW BUILDING WALL SECTION
2143	AI8.551	VSLMF - CREW BUILDING DETAIL SECTIONS
2144	AI8.552	VSLMF - CREW BUILDING DETAIL SECTIONS
2145	AI8.601	VSLMF - CREW BUILDING WALL SECTION
2146	AI8.602	VSLMF - CREW BUILDING WALL SECTION
2147	AI8.651	VSLMF - CREW BUILDING CASEWORK SECTIONS
2148	AI8.701	VSLMF - CREW BUILDING ENLARGED PLAN
2149	AI8.702	VSLMF - CREW BUILDING INTERIOR ELEVATION
2150	AI8.801	VSLMF - CREW BUILDING ROOM FINISH KEY
2151	AI8.802	VSLMF - CREW BUILDING ROOM FINISH SCHEDULE
2152	AI8.803	VSLMF - CREW BUILDING DOOR SCHEDULE
2153	AI8.804	VSLMF - CREW BUILDING DOOR & WINDOW TYPES
2154	AI8.805	VSLMF - CREW BUILDING DOOR DETAILS
2155	AI8.806	VSLMF - CREW BUILDING WINDOW DETAILS
2156	SI8.201	CREW BUILDING FOUNDATION PLAN
2157	SI8.202	CREW BUILDING FRAMING PLAN
2158	EI8.007	VSLMF OVERALL ELECTRICAL SITE PLAN
2159	EI8.007A	VSLMF AREA A ELECTRICAL SITE PLAN
2160	EI8.007B	VSLMF AREA B ELECTRICAL SITE PLAN
2161	EI8.007C	VSLMF AREA C ELECTRICAL SITE PLAN
2162	EI8.007D	VSLMF AREA D ELECTRICAL SITE PLAN
2163	EI8.007E	VSLMF AREA E ELECTRICAL SITE PLAN
2164	EI8.102	VSLMF CREW BUILDING LIGHTING FIXTURE SCHEDULE
2165	EI8.201	VSLMF CREW BUILDING ELECTRICAL PLAN
2166	EI8.202	VSLMF CREW BUILDING ELECTRICAL ROOF PLAN
2167	EI8.301	VSLMF CREW BUILDING LIGHTING PLAN
2168	EI8.401	VSLMF CREW BUILDING ELECTRICAL RISER DIAGRAM
2169	EI8.402	SERVICE YARD ELECTRICAL RISER DIAGRAM
2170	PI8.007	VSLMF OVERALL PLUMBING SITE PLAN
2171	PI8.007A	VSLMF AREA A PLUMBING SITE PLAN
2172	PI8.007B	VSLMF AREA B PLUMBING SITE PLAN
2173	PI8.007C	VSLMF AREA C PLUMBING SITE PLAN
2174	PI8.007D	VSLMF AREA D PLUMBING SITE PLAN
2175	PI8.007E	VSLMF AREA E PLUMBING SITE PLAN
2176	PI8.201	VSLMF CREW BUILDING OVERALL PLUMBING PLAN
2177	PI8.221	VSLMF CREW BUILDING ENLARGED WATER PLUMBING PLAN
2178	PI8.222	VSLMF CREW BUILDING ENLARGED SANITARY PLUMBING PLAN
2179	PI8.231	VSLMF CREW BUILDING SANITARY & WATER RISERS
2180	PI8.241	PLUMBING SCHEDULES
2181	PI8.242	PLUMBING SCHEDULES
2182	PI8.251	PLUMBING DETAILS
2183	PI8.008	VSLMF PLUMBING SITE PLAN
2184	PI8.008A	VSLMF PLUMBING SITE PLAN
2185	PI8.008B	VSLMF PLUMBING SITE PLAN
2186	PI8.008C	VSLMF PLUMBING SITE PLAN
2187	PI8.008D	VSLMF PLUMBING SITE PLAN
2188	PI8.008E	VSLMF PLUMBING SITE PLAN
2189	PI8.008F	VSLMF PLUMBING SITE PLAN
2190	PI8.008G	VSLMF PLUMBING SITE PLAN
2191	FPI8.007E	VSLMF AREA E FIRE PROTECTION SITE PLAN
2192	FPI8.201	VSLMF CREW BUILDING OVERALL FIRE PROTECTION PLAN
2193	FPI8.251	FIRE PROTECTION DETAILS
2194	FPI8.252	FIRE PROTECTION DETAILS
2195	FPI8.008	VSLMF FIRE PROTECTION SITE PLAN
2196	FPI8.008A	VSLMF FIRE PROTECTION SITE PLAN
2197	FPI8.008B	VSLMF FIRE PROTECTION SITE PLAN
2198	FPI8.008C	VSLMF FIRE PROTECTION SITE PLAN
2199	FPI8.008D	VSLMF FIRE PROTECTION SITE PLAN
2200	FPI8.008E	VSLMF FIRE PROTECTION SITE PLAN
2201	FPI8.720	VSLMF FIRE PROTECTION DETAILS
2202	FPI8.721	VSLMF FIRE PROTECTION DETAILS

NOTICE: THE OFFICIAL RECORD OF THIS SHEET IS THE ELECTRONIC FILE SIGNED AND SEALED UNDER RULE 61G15-23.003, F.A.C.

REVISIONS

DATE	BY	DESCRIPTION	DATE	BY	DESCRIPTION

TRANSPORTATION
AECOM TECHNICAL SERVICES, Inc.
300 Colonial Center Pkwy, Suite 130
Lake Mary, FL. 32746
T 407.549.4200 F 407.549.4201
Certificate of Authorization No. 8115
DAVID S. BURWELL PE NO. 55853 www.aecom.com

STATE OF FLORIDA
DEPARTMENT OF TRANSPORTATION

ROAD NO.	COUNTY	FINANCIAL PROJECT ID
CFRC P2S	VARIOUS	423446-9-52-01

CENTRAL FLORIDA COMMUTER RAIL TRANSIT (CFCRT) PHASE 2 SOUTH

INDEX OF SHEETS

SHEET NO. 20

DRAWING NO.
C00.001U

SHEET NO.	DRAWING NO.	TITLE
2203	FPI8.722	VSLMF FIRE PROTECTION DETAILS
2204	VI8.201	VSLMF CREW BUILDING - HVAC PLAN
2205	VI8.241	VSLMF HVAC SCHEDULES
2206	VI8.242	VSLMF HVAC SCHEDULES
2207	VI8.251	VSLMF HVAC DETAILS
2208	VI8.252	VSLMF HVAC DETAILS
2209	VI8.253	VSLMF HVAC DETAILS
2210	VI8.254	VSLMF HVAC DETAILS
2211	VI8.255	VSLMF HVAC DETAILS
2212	MI8.007	POINCIANA LAYOVER FACILITY COMMUNICATIONS SITE PLAN
2213	MI8.007A	POINCIANA LAYOVER FACILITY COMMUNICATIONS SITE PLAN
2214	MI8.007B	POINCIANA LAYOVER FACILITY COMMUNICATIONS SITE PLAN
2215	MI8.007C	POINCIANA LAYOVER FACILITY COMMUNICATIONS SITE PLAN
2216	MI8.007D	POINCIANA LAYOVER FACILITY COMMUNICATIONS SITE PLAN
2217	MI8.007E	POINCIANA LAYOVER FACILITY COMMUNICATIONS SITE PLAN
2218	MI8.201	POINCIANA LAYOVER FACILITY COMM CREW BUILDING PLAN
2219	MI8.202	POINCIANA LAYOVER FACILITY COMMUNICATIONS WIRING DETAILS

SHEET NO.	DRAWING NO.	TITLE

NOTICE: THE OFFICIAL RECORD OF THIS SHEET IS THE ELECTRONIC FILE SIGNED AND SEALED UNDER RULE 61G15-23.003, F.A.C.

REVISIONS					
DATE	BY	DESCRIPTION	DATE	BY	DESCRIPTION

TRANSPORTATION
AECOM TECHNICAL SERVICES, Inc.
300 Colonial Center Pkwy, Suite 130
Lake Mary, FL. 32746
T 407.549.4200 F 407.549.4201
Certificate of Authorization No. 8115
DAVID S. BURWELL PE NO. 55853 www.aecom.com

STATE OF FLORIDA
DEPARTMENT OF TRANSPORTATION

ROAD NO.	COUNTY	FINANCIAL PROJECT ID
CFRC P2S	VARIOUS	423446-9-52-01

CENTRAL FLORIDA COMMUTER RAIL TRANSIT (CFCRT) PHASE 2 SOUTH

INDEX OF SHEETS

SHEET NO.
21

SHEET INDEX

DRAWING NO.
C00.001BB

INDEX BY DRAWING NO.

DRAWING NO.	SHEET NO.	TITLE
AI4.201	1558	MEADOW WOODS STATION PLATFORM PLAN 1
AI4.202	1559	MEADOW WOODS STATION PLATFORM PLAN 2
AI4.301	1560	MEADOW WOODS STATION REFLECTED CEILING PLAN 1
AI4.302	1561	MEADOW WOODS STATION REFLECTED CEILING PLAN 2
AI4.501	1562	MEADOW WOODS STATION ELEVATIONS
AI4.502	1563	MEADOW WOODS STATION ELEVATIONS
AI5.201	1730	OSCEOLA PARKWAY STATION PLATFORM PLAN 1
AI5.202	1731	OSCEOLA PARKWAY STATION PLATFORM PLAN 2
AI5.301	1732	OSCEOLA PARKWAY STATION PLATFORM REFLECTED CEILING PLAN 1
AI5.302	1733	OSCEOLA PARKWAY STATION PLATFORM REFLECTED CEILING PLAN 1
AI5.501	1734	OSCEOLA PARKWAY STATION ELEVATIONS
AI5.502	1735	OSCEOLA PARKWAY STATION ELEVATIONS
AI6.201	1832	KISSIMMEE STATION PLATFORM PLAN 1
AI6.202	1833	KISSIMMEE STATION PLATFORM PLAN 2
AI6.301	1834	KISSIMMEE STATION REFLECTED CEILING PLAN 1
AI6.302	1835	KISSIMMEE STATION REFLECTED CEILING PLAN 2
AI6.401	1836	KISSIMMEE STATION ROOF PLAN 1
AI6.402	1837	KISSIMMEE STATION ROOF PLAN 2
AI6.501	1838	KISSIMMEE STATION ELEVATIONS
AI6.502	1839	KISSIMMEE STATION ELEVATIONS
AI7.201	2045	POINCIANA STATION PLATFORM PLAN 1
AI7.202	2046	POINCIANA STATION PLATFORM PLAN 2
AI7.301	2047	POINCIANA STATION REFLECTED CEILING PLAN 1
AI7.302	2048	POINCIANA STATION REFLECTED CEILING PLAN 2
AI7.501	2049	POINCIANA STATION ELEVATIONS
AI7.502	2050	POINCIANA STATION ELEVATIONS
~~AI8.101~~	~~2132~~	~~VSLMF - CREW BUILDING LIFE SAFETY PLAN~~
~~AI8.201~~	~~2133~~	~~VSLMF - CREW BUILDING PLAN~~
~~AI8.202~~	~~2134~~	~~VSLMF - CREW BUILDING ROOF PLAN~~
~~AI8.203~~	~~2135~~	~~VSLMF - CREW BUILDING PARTITION TYPES~~
~~AI8.206~~	~~2136~~	~~VSLMF - CREW BUILDING PARTITION DETAILS~~
~~AI8.207~~	~~2137~~	~~VSLMF - CREW BUILDING PARTITION DETAILS~~
~~AI8.208~~	~~2138~~	~~VSLMF - CREW BUILDING PARTITION DETAILS~~
~~AI8.301~~	~~2139~~	~~VSLMF - CREW BUILDING RCP~~
~~AI8.401~~	~~2140~~	~~VSLMF - CREW BUILDING EXTERIOR ELEVATIONS~~
~~AI8.501~~	~~2141~~	~~VSLMF - CREW BUILDING BUILDING SECTIONS~~
~~AI8.502~~	~~2142~~	~~VSLMF - CREW BUILDING WALL SECTION~~
~~AI8.551~~	~~2143~~	~~VSLMF - CREW BUILDING DETAIL SECTIONS~~
~~AI8.552~~	~~2144~~	~~VSLMF - CREW BUILDING DETAIL SECTIONS~~
~~AI8.601~~	~~2145~~	~~VSLMF - CREW BUILDING WALL SECTION~~
~~AI8.602~~	~~2146~~	~~VSLMF - CREW BUILDING WALL SECTION~~
~~AI8.651~~	~~2147~~	~~VSLMF - CREW BUILDING CASEWORK SECTIONS~~
~~AI8.701~~	~~2148~~	~~VSLMF - CREW BUILDING ENLARGED PLAN~~
~~AI8.702~~	~~2149~~	~~VSLMF - CREW BUILDING INTERIOR ELEVATION~~
~~AI8.801~~	~~2150~~	~~VSLMF - CREW BUILDING ROOM FINISH KEY~~
~~AI8.802~~	~~2151~~	~~VSLMF - CREW BUILDING ROOM FINISH SCHEDULE~~
~~AI8.803~~	~~2152~~	~~VSLMF - CREW BUILDING DOOR SCHEDULE~~
~~AI8.804~~	~~2153~~	~~VSLMF - CREW BUILDING DOOR & WINDOW TYPES~~
~~AI8.805~~	~~2154~~	~~VSLMF - CREW BUILDING DOOR DETAILS~~
~~AI8.806~~	~~2155~~	~~VSLMF - CREW BUILDING WINDOW DETAILS~~
A20.301	120	TYPICAL ENLARGED CANOPY REFLECTED CEILING PLANS
A20.401	121	TYPICAL PAVER PATTERN PLAN
A20.415	122	PAVER PATTERN PLAN & CONCRETE BASE PLAN BENEATH
A20.416	123	PAVER PATTERN PLAN & EQUIPMENT LAYOUT
A20.501	124	CANOPY A ENLARGED ELEVATIONS
A20.502	125	CANOPY A ENLARGED ELEVATIONS
A20.571	126	CANOPY F ENLARGED ELEVATIONS
A20.572	127	CANOPY F ENLARGED ELEVATIONS
A20.573	128	CANOPY F ENLARGED ELEVATIONS
A20.605	129	CANOPY "A" SECTION
A20.606	130	CANOPY "A" SECTION
A20.607	131	CANOPY "A" SECTIONS
A20.614	132	CANOPY "A" MINI-HIGH SECTION AT MIDSPAN
A20.615	133	CANOPY "A" MINI-HIGH SECTION AT COLUMN
A20.671	134	CANOPY "F" - TYPICAL PLATFORM SECTION AT COLUMN
A20.672	135	CANOPY "F" - TYPICAL PLATFORM SECTION AT MIDSPAN
A20.673	136	CANOPY "F" MINI-HIGH PLATFORM SECTION
A20.674	137	CANOPY "F" MINI-HIGH PLATFORM SECTION
A20.675	138	CANOPY "F" STANDARD & MIN-HIGH CROSS SECTION
A20.701	139	CANOPY "A" DETAILS
A20.705	140	CANOPY "A" DETAIL SECTIONS
A20.764	141	CANOPY "F" DETAIL SECTIONS
A20.765	142	CANOPY "F" DETAIL SECTIONS
A20.766	143	CANOPY "F" - PLATFORM SECTIONS - KISSIMMEE STATION
A20.767	144	CANOPY "F" - PLATFORM SECTIONS - KISSIMMEE STATION
A20.790	145	GUARDRAIL / HANDRAIL DETAILS
A20.791	146	GUARDRAIL / HANDRAIL DETAILS
A20.794	147	MISCELLANEOUS DETAILS
~~B00.001~~	~~65~~	~~CRASHWALL GENERAL NOTES~~
~~B79980.001~~	~~1233~~	~~MP A799.8 CRASH WALL SITE PLAN~~
~~B79980.002~~	~~1234~~	~~MP A799.8 CRASH WALL PLAN AND ELEVATION~~
~~B79980.003~~	~~1235~~	~~MP A799.8 CRASH WALL PLAN AND ELEVATION~~
~~B79980.004~~	~~1236~~	~~MP A799.8 CRASH WALL SOUTH STRUCTURAL DETAILS~~
~~B79980.005~~	~~1237~~	~~MP A799.8 CRASH WALL NORTH STRUCTURAL DETAILS~~
~~B79980.006~~	~~1238~~	~~MP A799.8 CRASH WALL STRUCTURAL DETAILS~~
~~D8006.001~~	~~1240~~	~~MP A800.6 GENERAL NOTES~~
~~D8006.005~~	~~1241~~	~~MP A800.6 PLAN AND ELEVATION (1 OF 2)~~
~~D8006.006~~	~~1242~~	~~MP A800.6 PLAN AND ELEVATION (2 OF 2)~~
~~D8006.007~~	~~1243~~	~~MP A800.6 FOUNDATION LAYOUT~~
~~D8006.008~~	~~1244~~	~~MP A800.6 END BENT NO.'S 1 & 5 CONCRETE DETAILS~~
~~D8006.009~~	~~1245~~	~~MP A800.6 END BENT NO.'S 1 & 5 REINFORCING DETAILS (1 OF 3)~~
~~D8006.010~~	~~1246~~	~~MP A800.6 END BENT NO.'S 1 & 5 REINFORCING DETAILS (2 OF 3)~~
~~D8006.011~~	~~1247~~	~~MP A800.6 END BENT NO.'S 1 & 5 REINFORCING DETAILS (3 OF 3)~~
~~D8006.012~~	~~1248~~	~~MP A800.6 INTERMEDIATE BENT NO.'S 2, 3 & 4 CONCRETE DETAILS~~
~~D8006.013~~	~~1249~~	~~MP A800.6 INTERMEDIATE BENT NO.'S 2, 3 & 4 REINFORCING DETAILS~~
~~D8006.014~~	~~1250~~	~~MP A800.6 INTERMEDIATE BENT NO.'S 2, 3 & 4 REINFORCING DETAILS~~
~~D8006.015~~	~~1251~~	~~MP A800.6 PRESTRESSED GIRDER 29" II" NOTES & CONCRETE DETAILS~~
~~D8006.016~~	~~1252~~	~~MP A800.6 PRESTRESSED GIRDER 29" II" & REINFORCING DETAILS~~
~~D8006.017~~	~~1253~~	~~MP A800.6 PRESTRESSED GIRDER 29" II" MISC. GIRDER DETAILS~~
~~D8006.019~~	~~1254~~	~~MP A800.6 WALKWAY DETAILS BRIDGE DECK SECTION~~
~~D8006.020~~	~~1255~~	~~MP A800.6 WALKWAY DETAILS (1 OF 3)~~
~~D8006.021~~	~~1256~~	~~MP A800.6 WALKWAY DETAILS (2 OF 3)~~
~~D8006.022~~	~~1257~~	~~MP A800.6 WALKWAY DETAILS (3 OF 3)~~
~~D8006.024~~	~~1258~~	~~MP A800.6 REINFORCING TABLE~~
~~D8039.001~~	~~1263~~	~~MP A803.9 NEAR KISSIMMEE, FL~~
~~D8039.002~~	~~1264~~	~~MP A803.9 NEAR KISSIMMEE, FL~~
~~D8039.003~~	~~1265~~	~~MP A803.9 MISC. CULVERT DETAILS (1 OF 3)~~
~~D8039.004~~	~~1266~~	~~MP A803.9 MISC. CULVERT DETAILS (2 OF 3)~~
~~D8039.005~~	~~1267~~	~~MP A803.9 MISC. CULVERT DETAILS (3 OF 3)~~
~~D8039.006~~	~~1268~~	~~MP A803.9 BOX CULVERT DATA TABLES~~
~~D8039.007~~	~~1269~~	~~MP A803.9 REINFORCEMENT BAR LIST~~
~~D8059.001~~	~~1273~~	~~MP A805.9 NEAR KISSIMMEE, FL~~
~~D8059.002~~	~~1274~~	~~MP A805.9 NEAR KISSIMMEE, FL~~
~~D8059.003~~	~~1275~~	~~MP A805.9 MISC. CULVERT DETAILS (1 OF 3)~~

NOTICE: THE OFFICIAL RECORD OF THIS SHEET IS THE ELECTRONIC FILE SIGNED AND SEALED UNDER RULE 61G15-23.003, F.A.C.

REVISIONS					
DATE	BY	DESCRIPTION	DATE	BY	DESCRIPTION

TRANSPORTATION
AECOM TECHNICAL SERVICES, Inc.
300 Colonial Center Pkwy, Suite 130
Lake Mary, FL. 32746
T 407.549.4200 F 407.549.4201
Certificate of Authorization No. 8115
DAVID S. BURWELL PE NO. 55853 www.aecom.com

STATE OF FLORIDA
DEPARTMENT OF TRANSPORTATION

ROAD NO.	COUNTY	FINANCIAL PROJECT ID
CFRC P2S	VARIOUS	423446-9-52-01

CENTRAL FLORIDA COMMUTER RAIL TRANSIT (CFCRT) PHASE 2 SOUTH

INDEX OF SHEETS

SHEET NO. 22

DRAWING NO.
C00.00ICC

DRAWING NO.	SHEET NO.	TITLE
B8059.004	1276	MP A805.9 MISC. CULVERT DETAILS (2 OF 3)
B8059.005	1277	MP A805.9 MISC. CULVERT DETAILS (3 OF 3)
B8059.006	1278	MP A805.9 BOX CULVERT DATA TABLES
B8059.007	1279	MP A805.9 REINFORCEMENT BAR LIST
B80673.001	1283	RETAINING CANTILEVER SHEET PILE WALL DATA TABLE AND DETAILS
B80673.002	1284	RETAINING WALL GEOTECHNICAL DATA
B80673.003	1285	CANTILEVER STEEL SHEET PILE WALL DETAILS
B80673.004	1286	MP 806.73 RETAINING WALL PLAN AND ELEVATION
B80680.001	1288	MP 806.80 RETAINING WALL PLAN AND ELEVATION
B80690.001	1290	MP 806.90 RETAINING WALL EXISTING AND PROPOSED PLANS
B80690.002	1291	MP 806.90 RETAINING WALL ELEVATION
B80690.003	1292	MP 806.90 RETAINING WALL PLAN AND ELEVATION
B80690.004	1293	MP 806.90 RETAINING WALL PLAN AND ELEVATION
B80690.005	1294	MP 806.90 RETAINING WALL STRUCTURAL DETAILS
B80690.006	1295	MP 806.90 CONCRETE RETAINING WALL CROSS SECTION
B80690.007	1296	MP 806.90 RETAINING WALL STRUCTURAL DETAILS
B80690.007A	1297	MP 806.90 RETAINING WALL STRUCTURAL DETAILS
B80690.008	1298	MP 806.90 RETAINING WALL PLAN AND ELEVATION
B80708.001	1300	MP 807.08 RETAINING WALL PLAN AND ELEVATION
B80898.001	1302	MP A808.98 CRASH WALLS SITE PLAN
B80898.002	1303	MP A808.98 EAST CRASH WALLS PLAN AND ELEVATION
B80898.003	1304	MP A808.98 WEST CRASH WALLS PLAN AND ELEVATION
B80898.004	1305	MP A808.98 CRASH WALL STRUCTURAL DETAILS
B8113.002	1307	MP 811.3 GENERAL NOTES
B8113.003	1308	MP 811.3 PLAN AND ELEVATION (1 OF 5)
B8113.004	1309	MP 811.3 PLAN AND ELEVATION (2 OF 5)
B8113.005	1310	MP 811.3 PLAN AND ELEVATION (3 OF 5)
B8113.006	1311	MP 811.3 PLAN AND ELEVATION (4 OF 5)
B8113.007	1312	MP 811.3 PLAN AND ELEVATION (5 OF 5)
B8113.008	1313	MP 811.3 CONSTRUCTION SEQUENCE
B8113.009	1314	MP 811.3 CONSTRUCTION SEQUENCE
B8113.011	1322	MP 811.3 FOUNDATION LAYOUT
B8113.012	1323	MP 811.3 FOUNDATION LAYOUT
B8113.013	1324	MP 811.3 BENT NO.'S 1 & 12
B8113.014	1325	MP 811.3 BENT NO.'S 1 & 12 DETAILS (1 OF 3)
B8113.015	1326	MP 811.3 BENT NO.'S 1 & 12 DETAILS (2 OF 3)
B8113.016	1327	MP 811.3 BENT NO.'S 1 & 12 DETAILS (3 OF 3)
B8113.017	1328	MP 811.3 INTERMEDIATE BENT NO.'S 2-6, 9-11
B8113.018	1329	MP 811.3 INTERMEDIATE BENT NO.'S 2-6, 9-11 DETAILS (1 OF 2)
B8113.019	1330	MP 811.3 INTERMEDIATE BENT NO.'S 2-6, 9-11 DETAILS (2 OF 2)
B8113.020	1331	MP 811.3 INTERMEDIATE BENT NO.'S 7 & 8
B8113.021	1332	MP 811.3 INTERMEDIATE BENT NO.'S 7 & 8 DETAILS (1 OF 2)
B8113.022	1333	MP 811.3 INTERMEDIATE BENT NO.'S 7 & 8 DETAILS (2 OF 2)
B8113.023	1334	MP 811.3 PRESTRESSED GIRDER DETAILS (1 OF 3)
B8113.024	1335	MP 811.3 PRESTRESSED GIRDER DETAILS (2 OF 3)
B8113.025	1336	MP 811.3 PRESTRESSED GIRDER DETAILS (3 OF 3)
B8113.026	1337	MP 811.3 PRESTRESSED GIRDER 28' 5"
B8113.027	1338	MP 811.3 PRESTRESSED GIRDER 28' 8 1/2"
B8113.028	1339	MP 811.3 PRESTRESSED GIRDER 29' 11"
B8113.029	1340	MP 811.3 THROUGH PLATE GIRDER (1 OF 8)
B8113.030	1341	MP 811.3 THROUGH PLATE GIRDER (2 OF 8)
B8113.031	1342	MP 811.3 THROUGH PLATE GIRDER (3 OF 8)
B8113.032	1343	MP 811.3 THROUGH PLATE GIRDER (4 OF 8)
B8113.033	1344	MP 811.3 THROUGH PLATE GIRDER (5 OF 8)
B8113.034	1345	MP 811.3 THROUGH PLATE GIRDER (6 OF 8)
B8113.035	1346	MP 811.3 THROUGH PLATE GIRDER (7 OF 8)
B8113.036	1347	MP 811.3 THROUGH PLATE GIRDER (8 OF 8)
B8113.037	1348	MP 811.3 BRIDGE DECK SECTIONS
B8113.038	1349	MP 811.3 WALKWAY DETAILS (1 OF 2)
B8113.039	1350	MP 811.3 WALKWAY DETAILS (2 OF 2)
B8113.040	1351	MP 811.3 RIPRAP DETAILS
B8113.041	1352	MP 811.3 REINFORCING BAR LIST (1 OF 4)
B8113.042	1353	MP 811.3 REINFORCING BAR LIST (2 OF 4)
B8113.043	1354	MP 811.3 REINFORCING BAR LIST (3 OF 4)
B8113.044	1355	MP 811.3 REINFORCING BAR LIST (4 OF 4)
B8131.001	1356	MP A813.1 NEAR KISSIMMEE, FL
B8131.002	1357	MP A813.1 NEAR KISSIMMEE, FL
B8131.003	1358	MP A813.1 MISC CULVERT DETIALS (1 OF 6)
B8131.004	1359	MP A813.1 MISC CULVERT DETIALS (2 OF 6)
B8131.005	1360	MP A813.1 MISC CULVERT DETIALS (3 OF 6)
B8131.006	1361	MP A813.1 MISC CULVERT DETIALS (4 OF 6)
B8131.007	1362	MP A813.1 MISC CULVERT DETIALS (5 OF 6)
B8131.008	1363	MP A813.1 MISC CULVERT DETIALS (6 OF 6)
B8131.009	1364	MP A813.1 BOX CULVERT DATA TABLES
B8131.010	1365	MP A813.1 REINFORCEMENT BAR LIST
B81355.001	1369	MP 813.55 RETAINING WALL PLAN AND ELEVATION
C00.001	1	KEY SHEET
C00.001B	2	SHEET INDEX
C00.001BB	22	SHEET INDEX
C00.001C	3	SHEET INDEX
C00.001CC	23	SHEET INDEX
C00.001D	4	SHEET INDEX
C00.001DD	24	SHEET INDEX
C00.001E	5	SHEET INDEX
C00.001EE	25	SHEET INDEX
C00.001F	6	SHEET INDEX
C00.001FF	26	SHEET INDEX
C00.001G	7	SHEET INDEX
C00.001GG	27	SHEET INDEX
C00.001H	8	SHEET INDEX
C00.001HH	28	SHEET INDEX
C00.001I	9	SHEET INDEX
C00.001II	29	SHEET INDEX
C00.001J	10	SHEET INDEX
C00.001JJ	30	SHEET INDEX
C00.001K	11	SHEET INDEX
C00.001KK	31	SHEET INDEX
C00.001L	12	SHEET INDEX
C00.001LL	32	SHEET INDEX
C00.001M	13	SHEET INDEX
C00.001MM	33	SHEET INDEX
C00.001N	14	SHEET INDEX
C00.001NN	34	SHEET INDEX
C00.001O	15	SHEET INDEX
C00.001OO	35	SHEET INDEX
C00.001P	16	SHEET INDEX
C00.001PP	36	SHEET INDEX
C00.001Q	17	SHEET INDEX
C00.001QQ	37	SHEET INDEX
C00.001R	18	SHEET INDEX
C00.001RR	38	SHEET INDEX
C00.001S	19	SHEET INDEX
C00.001SS	39	SHEET INDEX
C00.001T	20	SHEET INDEX
C00.001TT	40	SHEET INDEX
C00.001U	21	SHEET INDEX

NOTICE: THE OFFICIAL RECORD OF THIS SHEET IS THE ELECTRONIC FILE SIGNED AND SEALED UNDER RULE 61G15-23.003, F.A.C.

REVISIONS

DATE	BY	DESCRIPTION	DATE	BY	DESCRIPTION

TRANSPORTATION
AECOM TECHNICAL SERVICES, Inc.
300 Colonial Center Pkwy, Suite 130
Lake Mary, FL 32746
T 407.549.4200 F 407.549.4201
Certificate of Authorization No. 8115
DAVID S. BURWELL PE NO. 55853 www.aecom.com

STATE OF FLORIDA
DEPARTMENT OF TRANSPORTATION

ROAD NO.	COUNTY	FINANCIAL PROJECT ID
CFRC P2S	VARIOUS	423446-9-52-01

CENTRAL FLORIDA COMMUTER RAIL TRANSIT (CFCRT) PHASE 2 SOUTH

INDEX OF SHEETS

SHEET NO.
23

PrinceK 5/26/2015 2:53:14 PM Q:\423446952O1\roadway\C00-001B - Sheet Index.dgn

DRAWING NO.	SHEET NO.	TITLE
C00.001UU	41	SHEET INDEX
C00.002A	52	CIVIL GENERAL NOTES
C00.002B	53	UTILITY GENERAL NOTES
C00.002C	54	UTILITY GENERAL NOTES
C00.002D	56	LANDSCAPE GENERAL NOTES
C00.002E	57	STRUCTURAL GENERAL NOTES
~~C00.002F~~	~~58~~	~~STRUCTURAL GENERAL NOTES~~
C00.002G	59	COMMUNICATION GENERAL NOTES
C00.002H	60	ELECTRICAL GENERAL NOTES
~~C00.002J~~	~~61~~	~~ITS DUCT GENERAL NOTES~~
C00.002K	55	WATER CONNECTION GENERAL NOTES
C00.002L	62	ARCHITECTURAL GENERAL NOTES
~~C00.002M~~	~~63~~	~~FIRE PROTECTION GENERAL NOTES~~
C00.003A	74	TYPICAL SECTIONS
C00.003B	75	TYPICAL SECTIONS
C00.003C	76	TYPICAL SITE DETAILS
C00.003D	77	TYPICAL SITE DETAILS
C00.003E	78	TYPICAL SITE DETAILS
C00.004A	79	GUIDESIGN WORK SHEET
C00.006A	42	ABBREVIATIONS
C00.006B	43	ABBREVIATIONS
C00.006C	44	ABBREVIATIONS
C00.006D	45	ABBREVIATIONS
C00.006E	46	ABBREVIATIONS
C00.007A	47	PROJECT SYMBOLS
C00.007B	48	PROJECT SYMBOLS
C00.007C	49	PROJECT SYMBOLS
C00.007D	50	PROJECT SYMBOLS
C00.007E	51	PROJECT SYMBOLS
C14.005	1441	MEADOW WOODS STATION EXISTING SITE PLAN
C14.006	1442	MEADOW WOODS STATION DEMOLITION PLAN
C14.006A	1443	MEADOW WOODS STATION DEMOLITION PLAN
C14.006B	1444	MEADOW WOODS STATION DEMOLITION PLAN
C14.006C	1445	MEADOW WOODS STATION DEMOLITION PLAN
C14.006D	1446	MEADOW WOODS STATION DEMOLITION PLAN
C14.006E	1447	MEADOW WOODS STATION DEMOLITION PLAN
C14.006F	1448	MEADOW WOODS STATION DEMOLITION PLAN
C14.007	1456	MEADOW WOODS STATION PROPOSED SITE PLAN
C14.007A	1457	MEADOW WOODS STATION PROPOSED SITE PLAN
C14.007B	1458	MEADOW WOODS STATION PROPOSED SITE PLAN
C14.007C	1459	MEADOW WOODS STATION PROPOSED SITE PLAN
C14.007D	1460	MEADOW WOODS STATION PROPOSED SITE PLAN
C14.007E	1461	MEADOW WOODS STATION PROPOSED SITE PLAN
C14.007F	1462	MEADOW WOODS STATION PROPOSED SITE PLAN
C14.008A	1464	MEADOW WOODS STATION COORDINATE DATA
C14.008B	1465	MEADOW WOODS STATION COORDINATE DATA
C14.008C	1466	MEADOW WOODS STATION COORDINATE DATA
C14.009	1467	MEADOW WOODS STATION GRADING PLAN
C14.009A	1468	MEADOW WOODS STATION GRADING PLAN
C14.009B	1469	MEADOW WOODS STATION GRADING PLAN
C14.009C	1470	MEADOW WOODS STATION GRADING PLAN
C14.009D	1471	MEADOW WOODS STATION GRADING PLAN
C14.009E	1472	MEADOW WOODS STATION GRADING PLAN
C14.009F	1473	MEADOW WOODS STATION GRADING PLAN
C14.010	1474	MEADOW WOODS STATION DRAINAGE PLAN
C14.010A	1475	MEADOW WOODS STATION DRAINAGE PLAN
C14.010B	1476	MEADOW WOODS STATION DRAINAGE PLAN
C14.010C	1477	MEADOW WOODS STATION DRAINAGE PLAN
C14.010D	1478	MEADOW WOODS STATION DRAINAGE PLAN
C14.010E	1479	MEADOW WOODS STATION DRAINAGE PLAN
C14.010F	1480	MEADOW WOODS STATION DRAINAGE PLAN
C14.010G	1449	MEADOW WOODS STATION OVERALL DRAINAGE MAP
C14.010H	1450	MEADOW WOODS STATION DETAILED DRAINAGE MAP
C14.010I	1481	MEADOW WOODS STATION DRAINAGE DETAIL
C14.010J	1482	MEADOW WOODS STATION DRAINAGE DETAIL
C14.010K	1483	MEADOW WOODS STATION DRAINAGE STRUCTURES SUMMARY
C14.010L	1484	MEADOW WOODS STATION DRAINAGE STRUCTURES SUMMARY
C14.010M	1451	MEADOW WOODS STATION ENVIRONMENTAL PLAN
C14.010N	1452	MEADOW WOODS STATION SUMMARY OF DRAINAGE STRUCTURES
C14.010O	1453	MEADOW WOODS STATION SUMMARY OF DRAINAGE STRUCTURES
C14.010P	1454	MEADOW WOODS STATION SUMMARY OF DRAINAGE STRUCTURES
C14.010Q	1455	MEADOW WOODS STATION OPTIONAL MATERIALS TABULATIONS
C14.010R	1485	MEADOW WOODS STATION POND 1 CROSS SECTION
C14.010S	1486	MEADOW WOODS STATION POND 1 CROSS SECTION
C14.010T	1487	MEADOW WOODS STATION POND 2 CROSS SECTION
C14.010U	1488	MEADOW WOODS STATION POND 2 CROSS SECTION
C14.011	1505	MEADOW WOODS STATION UTILITY PLAN
C14.011A	1506	MEADOW WOODS STATION UTILITY PLAN
C14.011B	1507	MEADOW WOODS STATION UTILITY PLAN
C14.011C	1508	MEADOW WOODS STATION UTILITY PLAN
C14.011D	1509	MEADOW WOODS STATION UTILITY PLAN
C14.011E	1510	MEADOW WOODS STATION UTILITY PLAN
C14.011F	1511	MEADOW WOODS STATION UTILITY PLAN
C14.011G	1512	MEADOW WOODS STATION OFFSITE UTILITY PLAN
C14.012A	1502	MEADOW WOODS STATION SWPPP PLAN
C14.012B	1503	MEADOW WOODS STATION SWPPP PLAN
C14.013	1513	MEADOW WOODS STATION SIGNING AND MARKING PLAN
C14.013A	1514	MEADOW WOODS STATION SIGNING AND MARKING PLAN
C14.013B	1515	MEADOW WOODS STATION SIGNING AND MARKING PLAN
C14.013C	1516	MEADOW WOODS STATION SIGNING AND MARKING PLAN
C14.013D	1517	MEADOW WOODS STATION SIGNING AND MARKING PLAN
C14.013E	1518	MEADOW WOODS STATION SIGNING AND MARKING PLAN
C14.013F	1519	MEADOW WOODS STATION SIGNING AND MARKING PLAN
C14.014A	1463	MEADOW WOODS STATION PROPOSED OFF SITE PLAN
C14.014B	1489	MEADOW WOODS STATION TYPICAL SECTION
C14.014C	1490	MEADOW WOODS STATION ROADWAY CROSS SECTIONS
C14.014D	1491	MEADOW WOODS STATION ROADWAY CROSS SECTIONS
C14.015	1504	MEADOW WOODS STATION TRAFFIC CONTROL PLAN
C14.018A	1492	MEADOW WOODS STATION BORING LOCATION PLAN
C14.018B	1493	MEADOW WOODS STATION BORING LOCATION PLAN
C14.018C	1494	MEADOW WOODS STATION SOIL SURVEY
C14.018D	1495	MEADOW WOODS STATION ROADWAY AUGER BORING RESULTS
C14.018E	1496	MEADOW WOODS STATION POND AUGER BORING RESULTS
C14.018F	1497	MEADOW WOODS STATION PLATFORM SPT BORING RESULTS
C14.018G	1498	MEADOW WOODS STATION PLATFORM SPT BORING RESULTS
C14.018H	1499	MEADOW WOODS STATION MUCK PROBE RESULTS
C14.018I	1500	MEADOW WOODS STATION MUCK PROBE RESULTS
C14.018J	1501	MEADOW WOODS STATION POND 2 BERM CLAY CORE DETAIL
C15.005	1610	OSCEOLA PARKWAY STATION EXISTING SITE PLAN
C15.006	1611	OSCEOLA PARKWAY STATION DEMOLITION PLAN
C15.006A	1612	OSCEOLA PARKWAY STATION DEMOLITION PLAN
C15.006B	1613	OSCEOLA PARKWAY STATION DEMOLITION PLAN
C15.006C	1614	OSCEOLA PARKWAY STATION DEMOLITION PLAN
C15.006D	1615	OSCEOLA PARKWAY STATION DEMOLITION PLAN
C15.006E	1616	OSCEOLA PARKWAY STATION DEMOLITION PLAN
C15.006F	1617	OSCEOLA PARKWAY STATION DEMOLITION PLAN

DRAWING NO.
C00.001DD

NOTICE: THE OFFICIAL RECORD OF THIS SHEET IS THE ELECTRONIC FILE SIGNED AND SEALED UNDER RULE 61G15-23.003, F.A.C.

REVISIONS

DATE	BY	DESCRIPTION	DATE	BY	DESCRIPTION

TRANSPORTATION
AECOM TECHNICAL SERVICES, Inc.
300 Colonial Center Pkwy, Suite 130
Lake Mary, FL. 32746
T 407.549.4200 F 407.549.4201
Certificate of Authorization No. 8115
DAVID S. BURWELL PE NO. 55853 www.aecom.com

STATE OF FLORIDA
DEPARTMENT OF TRANSPORTATION

ROAD NO.	COUNTY	FINANCIAL PROJECT ID
CFRC P2S	VARIOUS	423446-9-52-01

CENTRAL FLORIDA COMMUTER RAIL TRANSIT (CFCRT) PHASE 2 SOUTH

INDEX OF SHEETS

SHEET NO.
24

DRAWING NO.
C00.001EE

DRAWING NO.	SHEET NO.	TITLE
CI5.007	I623	OSCEOLA PARKWAY STATION PROPOSED SITE PLAN
CI5.007A	I624	OSCEOLA PARKWAY STATION PROPOSED SITE PLAN
CI5.007B	I625	OSCEOLA PARKWAY STATION PROPOSED SITE PLAN
CI5.007C	I626	OSCEOLA PARKWAY STATION PROPOSED SITE PLAN
CI5.007D	I627	OSCEOLA PARKWAY STATION PROPOSED SITE PLAN
CI5.007E	I628	OSCEOLA PARKWAY STATION PROPOSED SITE PLAN
CI5.007F	I629	OSCEOLA PARKWAY STATION PROPOSED SITE PLAN
CI5.008A	I631	OSCEOLA PARKWAY STATION COORDINATE DATA
CI5.008B	I632	OSCEOLA PARKWAY STATION COORDIANTE DATA
CI5.009	I633	OSCEOLA PARKWAY STATION GRADING PLAN
CI5.009A	I634	OSCEOLA PARKWAY STATION GRADING PLAN
CI5.009B	I635	OSCEOLA PARKWAY STATION GRADING PLAN
CI5.009C	I636	OSCEOLA PARKWAY STATION GRADING PLAN
CI5.009D	I637	OSCEOLA PARKWAY STATION GRADING PLAN
CI5.009E	I638	OSCEOLA PARKWAY STATION GRADING PLAN
CI5.009F	I639	OSCEOLA PARKWAY STATION GRADING PLAN
CI5.010	I640	OSCEOLA PARKWAY STATION DRAINAGE PLAN
CI5.010A	I641	OSCEOLA PARKWAY STATION DRAINAGE PLAN
CI5.010AA	I622	OSCEOLA PARKWAY STATION OPTIONAL MATERIALS TABULATION
CI5.010B	I642	OSCEOLA PARKWAY STATION DRAINAGE PLAN
CI5.010BB	I663	OSCEOLA PARKWAY STATION POND ICROSS SECTIONS
CI5.010C	I643	OSCEOLA PARKWAY STATION DRAINAGE PLAN
CI5.010CC	I664	OSCEOLA PARKWAY STATION POND ICROSS SECTIONS
CI5.010D	I644	OSCEOLA PARKWAY STATION DRAINAGE PLAN
CI5.010E	I645	OSCEOLA PARKWAY STATION DRAINAGE PLAN
CI5.010F	I646	OSCEOLA PARKWAY STATION DRAINAGE PLAN
CI5.010G	I618	OSCEOLA PARKWAY STATION DETAILED DRAINAGE MAP
CI5.010H	I647	OSCEOLA PARKWAY STATION DRAINAGE DETAIL
CI5.010I	I648	OSCEOLA PARKWAY STATION DRAINAGE DETAIL
CI5.010J	I649	OSCEOLA PARKWAY STATION DRAINAGE DETAIL
CI5.010K	I650	OSCEOLA PARKWAY STATION DRAINAGE DETAIL
CI5.010L	I651	OSCEOLA PARKWAY STATION DRAINAGE DETAIL
CI5.010M	I652	OSCEOLA PARKWAY STATION DRAINAGE DETAIL
CI5.010O	I654	OSCEOLA PARKWAY STATION DRAINAGE DETAIL
CI5.010P	I655	OSCEOLA PARKWAY STATION DRAINAGE DETAIL
CI5.010Q	I656	OSCEOLA PARKWAY STATION DRAINAGE DETAIL
CI5.010R	I657	OSCEOLA PARKWAY STATION DRAINAGE DETAIL
CI5.010S	I658	OSCEOLA PARKWAY STATION DRAINAGE DETAIL
CI5.010T	I659	OSCEOLA PARKWAY STATION DRAINAGE DETAIL
CI5.010U	I660	OSCEOLA PARKWAY STATION DRAINAGE DETAIL
CI5.010V	I661	OSCEOLA PARKWAY STATION DRAINAGE STRUCTURES SUMMARY
CI5.010W	I662	OSCEOLA PARKWAY STATION DRAINAGE STRUCTURES SUMMARY
CI5.010X	I619	OSCEOLA PARKWAY STATION ENVIRONEMENTAL PLAN
CI5.010Y	I620	OSCEOLA PARKWAY STATION SUMMARY OF DRAINAGE STRUCTURES
CI5.010Z	I621	OSCEOLA PARKWAY STATION SUMMARY OF DRAINAGE STRUCTURES
CI5.011	I677	OSCEOLA PARKWAY STATION UTILITY PLAN
CI5.011A	I678	OSCEOLA PARKWAY STATION UTILITY PLAN
CI5.011B	I679	OSCEOLA PARKWAY STATION UTILITY PLAN
CI5.011C	I680	OSCEOLA PARKWAY STATION UTILITY PLAN
CI5.011D	I681	OSCEOLA PARKWAY STATION UTILITY PLAN
CI5.011E	I682	OSCEOLA PARKWAY STATION UTILITY PLAN
CI5.011F	I683	OSCEOLA PARKWAY STATION UTILITY PLAN
CI5.011G	I684	OSCEOLA PARKWAY STATION OFFSITE UTILITY PLAN
CI5.012A	I674	OSCEOLA PARKWAY STATION SWPPP PLAN
CI5.012B	I675	OSCEOLA PARKWAY STATION SWPPP PLAN
CI5.013	I685	OSCEOLA PARKWAY STATION SIGNING AND MARKING PLAN
CI5.013A	I686	OSCEOLA PARKWAY STATION SIGNING AND MARKING PLAN
CI5.013B	I687	OSCEOLA PARKWAY STATION SIGNING AND MARKING PLAN
CI5.013C	I688	OSCEOLA PARKWAY STATION SIGNING AND MARKING PLAN
CI5.013D	I689	OSCEOLA PARKWAY STATION SIGNING AND MARKING PLAN
CI5.013E	I690	OSCEOLA PARKWAY STATION SIGNING AND MARKING PLAN
CI5.013F	I691	OSCEOLA PARKWAY STATION SIGNING AND MARKING PLAN
CI5.014A	I630	OSCEOLA PARKWAY STATION ROADWAY PLAN
CI5.015	I676	OSCEOLA PARKWAY STATION TRAFFIC CONTROL PLAN
CI5.018A	I665	OSCEOLA PARKWAY STATION BORING LOCATION PLAN
CI5.018B	I666	OSCEOLA PARKWAY STATION BORING LOCATION PLAN
CI5.018C	I667	OSCEOLA PARKWAY STATION SOIL SURVEY
CI5.018D	I668	OSCEOLA PARKWAY STATION ROADWAY AUGER BORING RESULTS
CI5.018E	I669	OSCEOLA PARKWAY STATION POND AUGER BORING RESULTS
CI5.018F	I670	OSCEOLA PARKWAY STATION ROADWAY SPT BORING RESULTS
CI5.018G	I671	OSCEOLA PARKWAY STATION PLATFORM SPT BORING RESULTS
CI5.018H	I672	OSCEOLA PARKWAY STATION PLATFORM SPT BORING RESULTS
CI5.018I	I673	OSCEOLA PARKWAY STATION MUCK PROBE RESULTS
CI5.10IN	I653	OSCEOLA PARKWAY STATION DRAINAGE DETAIL
CI6.005	I781	KISSIMMEE STATION EXISTING SITE PLAN
CI6.006	I782	KISSIMMEE STATION DEMOLITION PLAN
CI6.006C	I783	KISSIMMEE STATION DEMOLITION PLAN
CI6.006D	I784	KISSIMMEE STATION DEMOLITION PLAN
CI6.007	I788	KISSIMMEE STATION PROPOSED SITE PLAN
CI6.007C	I789	KISSIMMEE STATION PROPOSED SITE PLAN
CI6.007D	I790	KISSIMMEE STATION PROPOSED SITE PLAN
CI6.008A	I791	KISSIMMEE STATION COORDINATE DATA
CI6.009	I792	KISSIMMEE STATION GRADING PLAN
CI6.009C	I793	KISSIMMEE STATION GRADING PLAN
CI6.009D	I794	KISSIMMEE STATION GRADING PLAN
CI6.010	I795	KISSIMMEE STATION DRAINAGE PLAN
CI6.010A	I796	KISSIMMEE STATION DRAINAGE PLAN
CI6.010B	I797	KISSIMMEE STATION DRAINAGE PLAN
CI6.010C	I785	KISSIMMEE STATION DRAINAGE MAP
CI6.010D	I798	KISSIMMEE STATION DRAINAGE STRUCTURES SUMMARY
CI6.010E	I786	KISSIMMEE STATION SUMMARY OF DRAINAGE STRUCTURES
CI6.010F	I787	KISSIMMEE STATION OPTIONAL MATERIALS TABULATION
CI6.011	I806	KISSIMMEE STATION UTILITY PLAN
CI6.011C	I807	KISSIMMEE STATION UTILITY PLAN
CI6.011D	I808	KISSIMMEE STATION UTILITY PLAN
CI6.012A	I804	KISSIMMEE STATION SWPPP PLAN
CI6.012B	I805	KISSIMMEE STATION SWPPP PLAN
CI6.013	I809	KISSIMMEE STATION SIGNING AND MARKING PLAN
CI6.013C	I810	KISSIMMEE STATION SIGNING AND MARKING PLAN
CI6.013D	I811	KISSIMMEE STATION SIGNING AND MARKING PLAN
CI6.018A	I799	KISSIMMEE STATION BORING LOCATION PLAN
CI6.018B	I800	KISSIMMEE STATION SOIL SURVEY
CI6.018C	I801	KISSIMMEE STATION ROADWAY AUGER BORING RESULTS
CI6.018D	I802	KISSIMMEE STATION PLATFORM SPT BORING RESULTS
CI6.018E	I803	KISSIMMEE STATION PLATFORM SPT BORING RESULTS
CI7.005	I881	POINCIANA STATION EXISTING SITE PLAN
CI7.006	I882	POINCIANA STATION DEMOLITION PLAN
CI7.006A	I883	POINCIANA STATION DEMOLITION PLAN
CI7.006B	I884	POINCIANA STATION DEMOLITION PLAN
CI7.006C	I885	POINCIANA STATION DEMOLITION PLAN
CI7.006D	I886	POINCIANA STATION DEMOLITION PLAN
CI7.006E	I887	POINCIANA STATION DEMOLITION PLAN
CI7.006F	I888	POINCIANA STATION DEMOLITION PLAN
CI7.006G	I889	POINCIANA STATION DEMOLITION PLAN
CI7.006H	I890	POINCIANA STATION DEMOLITION PLAN
CI7.006I	I891	POINCIANA STATION DEMOLITION PLAN

NOTICE: THE OFFICIAL RECORD OF THIS SHEET IS THE ELECTRONIC FILE SIGNED AND SEALED UNDER RULE 61G15-23.003, F.A.C.

REVISIONS

DATE	BY	DESCRIPTION	DATE	BY	DESCRIPTION

TRANSPORTATION
AECOM TECHNICAL SERVICES, Inc.
300 Colonial Center Pkwy, Suite 130
Lake Mary, FL. 32746
T 407.549.4200 F 407.549.4201
Certificate of Authorization No. 8115
DAVID S. BURWELL PE NO. 55853 www.aecom.com

STATE OF FLORIDA
DEPARTMENT OF TRANSPORTATION

ROAD NO.	COUNTY	FINANCIAL PROJECT ID
CFRC P2S	VARIOUS	423446-9-52-01

CENTRAL FLORIDA COMMUTER RAIL TRANSIT (CFCRT) PHASE 2 SOUTH

INDEX OF SHEETS

SHEET NO.
25

DRAWING NO.
C00.001FF

DRAWING NO.	SHEET NO.	TITLE
CI7.006J	1892	POINCIANA STATION DEMOLITION PLAN
CI7.007	1899	POINCIANA STATION PROPOSED SITE PLAN
CI7.007A	1900	POINCIANA STATION PROPOSED SITE PLAN
CI7.007B	1901	POINCIANA STATION PROPOSED SITE PLAN
CI7.007C	1902	POINCIANA STATION PROPOSED SITE PLAN
CI7.007D	1903	POINCIANA STATION PROPOSED SITE PLAN
CI7.007E	1904	POINCIANA STATION PROPOSED SITE PLAN
CI7.007F	1905	POINCIANA STATION PROPOSED SITE PLAN
CI7.007G	1906	POINCIANA STATION PROPOSED SITE PLAN
CI7.007H	1907	POINCIANA STATION PROPOSED SITE PLAN
CI7.007I	1908	POINCIANA STATION PROPOSED SITE PLAN
CI7.007J	1909	POINCIANA STATION PROPOSED SITE PLAN
CI7.008A	1912	POINCIANA STATION COORDINATE DATA
CI7.008B	1913	POINCIANA STATION COORDINATE DATA
CI7.009	1914	POINCIANA STATION GRADING PLAN
CI7.009A	1915	POINCIANA STATION GRADING PLAN
CI7.009B	1916	POINCIANA STATION GRADING PLAN
CI7.009C	1917	POINCIANA STATION GRADING PLAN
CI7.009D	1918	POINCIANA STATION GRADING PLAN
CI7.009E	1919	POINCIANA STATION GRADING PLAN
CI7.009F	1920	POINCIANA STATION GRADING PLAN
CI7.009G	1921	POINCIANA STATION GRADING PLAN
CI7.009H	1922	POINCIANA STATION GRADING PLAN
CI7.009I	1923	POINCIANA STATION GRADING PLAN
CI7.009J	1924	POINCIANA STATION GRADING PLAN
CI7.010	1925	POINCIANA STATION DRAINAGE PLAN
CI7.010A	1926	POINCIANA STATION DRAINAGE SITE PLAN
CI7.010B	1927	POINCIANA STATION DRAINAGE PLAN
CI7.010C	1928	POINCIANA STATION DRAINAGE PLAN
CI7.010D	1929	POINCIANA STATION DRAINAGE PLAN
CI7.010E	1930	POINCIANA STATION DRAINAGE PLAN
CI7.010F	1931	POINCIANA STATION DRAINAGE PLAN
CI7.010G	1932	POINCIANA STATION DRAINAGE PLAN
CI7.010H	1933	POINCIANA STATION DRAINAGE PLAN
CI7.010I	1934	POINCIANA STATION DRAINAGE PLAN
CI7.010J	1935	POINCIANA STATION DRAINAGE PLAN
CI7.010K	1893	POINCIANA STATION DRAINAGE MAP
CI7.010L	1936	POINCIANA STATION DRAINAGE DETAIL
CI7.010M	1937	POINCIANA STATION DRAINAGE DETAIL
CI7.010N	1938	POINCIANA STATION DRAINAGE STRUCTURES SUMMARY
CI7.010O	1939	POINCIANA STATION DRAINAGE STRUCTURES SUMMARY
CI7.010P	1894	POINCIANA STATION ENVIRONMENTAL PLAN
CI7.010Q	1895	POINCIANA STATION SUMMARY OF DRAINAGE STRUCTURES
CI7.010R	1896	POINCIANA STATION SUMMARY OF DRAINAGE STRUCTURES
CI7.010S	1897	POINCIANA STATION SUMMARY OF DRAINAGE STRUCTURES
CI7.010T	1898	POINCIANA STATION OPTIONAL MATERIALS TABULATION
CI7.010U	1940	POINCIANA STATION POND ICROSS SECTIONS
CI7.010V	1941	POINCIANA STATION POND 2 CROSS SECTIONS
CI7.011	1961	POINCIANA STATION UTILITY PLAN
CI7.011A	1962	POINCIANA STATION UTILITY PLAN
CI7.011B	1963	POINCIANA STATION UTILITY PLAN
CI7.011C	1964	POINCIANA STATION UTILITY PLAN
CI7.011D	1965	POINCIANA STATION UTILITY PLAN
CI7.011E	1966	POINCIANA STATION UTILITY PLAN
CI7.011F	1967	POINCIANA STATION UTILITY PLAN
CI7.011G	1968	POINCIANA STATION UTILITY PLAN
CI7.011H	1969	POINCIANA STATION UTILITY PLAN
CI7.011I	1970	POINCIANA STATION UTILITY PLAN
CI7.011J	1971	POINCIANA STATION UTILITY PLAN
CI7.011K	1972	POINCIANA STATION OFFSITE UTILITY PLAN
CI7.011L	1973	POINCIANA STATION OFFSITE UTILITY PLAN
CI7.012A	1958	POINCIANA STATION SWPPP PLAN
CI7.012B	1959	POINCIANA STATION SWPPP PLAN
CI7.013	1974	POINCIANA STATION SIGNING AND MARKING PLAN
CI7.013A	1975	POINCIANA STATION SIGNING AND MARKING PLAN
CI7.013B	1976	POINCIANA STATION SIGNING AND MARKING PLAN
CI7.013C	1977	POINCIANA STATION SIGNING AND MARKING PLAN
CI7.013D	1978	POINCIANA STATION SIGNING AND MARKING PLAN
CI7.013E	1979	POINCIANA STATION SIGNING AND MARKING PLAN
CI7.013F	1980	POINCIANA STATION SIGNING AND MARKING PLAN
CI7.013G	1981	POINCIANA STATION SIGNING AND MARKING PLAN
CI7.013H	1982	POINCIANA STATION SIGNING AND MARKING PLAN
CI7.0131	1983	POINCIANA STATION SIGNING AND MARKING PLAN
CI7.013J	1984	POINCIANA STATION SIGNING AND MARKING PLAN
CI7.014A	1910	POINCIANA STATION ROADWAY PLAN
CI7.014B	1911	POINCIANA STATION ROADWAY PLAN
CI7.014C	1942	POINCIANA STATION ROADWAY TYPICAL SECTION
CI7.014D	1943	POINCIANA STATION ROADWAY CROSS SECTION
CI7.014E	1944	POINCIANA STATION ROADWAY CROSS SECTION
CI7.014F	1945	POINCIANA STATION ROADWAY CROSS SECTION
CI7.014G	1946	POINCIANA STATION ROADWAY CROSS SECTION
CI7.014H	1947	POINCIANA STATION ROADWAY CROSS SECTION
CI7.014I	1948	POINCIANA STATION ROADWAY CROSS SECTION
CI7.014J	1949	POINCIANA STATION ROADWAY CROSS SECTION
CI7.015	1960	POINCIANA STATION TRAFFIC CONTROL PLAN
CI7.016A	1985	POINCIANA STATION OFFSITE SAPM PLAN
CI7.016B	1986	POINCIANA STATION OFFSITE SAPM PLAN
CI7.018A	1950	POINCIANA STATION BORING LOCATION PLAN
CI7.018B	1951	POINCIANA STATION BORING LOCATION PLAN
CI7.018C	1952	POINCIANA STATION SOIL SURVEY
CI7.018D	1953	POINCIANA STATION ROADWAY AUGER BORING RESULTS
CI7.018E	1954	POINCIANA STATION POND AUGER BORING RESULTS
CI7.018F	1955	POINCIANA STATION POND AUGER BORING RESULTS
CI7.018G	1956	POINCIANA STATION PLATFORM SPT BORING RESULTS
CI7.018H	1957	POINCIANA STATION PLATFORM SPT BORING RESULTS
~~CI8.007~~	~~2106~~	~~VSLMF PROPOSED SITE PLAN~~
~~CI8.007A~~	~~2107~~	~~VSLMF PROPOSED SITE PLAN~~
~~CI8.007B~~	~~2108~~	~~VSLMF PROPOSED SITE PLAN~~
~~CI8.007C~~	~~2109~~	~~VSLMF PROPOSED SITE PLAN~~
~~CI8.007D~~	~~2110~~	~~VSLMF PROPOSED SITE PLAN~~
~~CI8.007E~~	~~2111~~	~~VSLMF PROPOSED SITE PLAN~~
~~CI8.009~~	~~2112~~	~~VSLMF GRADING PLAN~~
~~CI8.009A~~	~~2113~~	~~VSLMF GRADING PLAN~~
~~CI8.009B~~	~~2114~~	~~VSLMF GRADING PLAN~~
~~CI8.009C~~	~~2115~~	~~VSLMF GRADING PLAN~~
~~CI8.009D~~	~~2116~~	~~VSLMF GRADING PLAN~~
~~CI8.009E~~	~~2117~~	~~VSLMF GRADING PLAN~~
~~CI8.013~~	~~2126~~	~~VSLMF SIGNING AND MARKING PLAN~~
~~CI8.013A~~	~~2127~~	~~VSLMF SIGNING AND MARKING PLAN~~
~~CI8.013B~~	~~2128~~	~~VSLMF SIGNING AND MARKING PLAN~~
~~CI8.013C~~	~~2129~~	~~VSLMF SIGNING AND MARKING PLAN~~
~~CI8.013D~~	~~2130~~	~~VSLMF SIGNING AND MARKING PLAN~~
~~CI8.013E~~	~~2131~~	~~VSLMF SIGNING AND MARKING PLAN~~
~~CI8.018A~~	~~2118~~	~~POINCIANA VSLMF BORING LOCATION PLAN~~
~~CI8.018B~~	~~2119~~	~~POINCIANA VSLMF BORING LOCATION PLAN~~
~~CI8.018C~~	~~2120~~	~~POINCIANA VSLMF BORING LOCATION PLAN~~

NOTICE: THE OFFICIAL RECORD OF THIS SHEET IS THE ELECTRONIC FILE SIGNED AND SEALED UNDER RULE 61G15-23.003, F.A.C.

REVISIONS

DATE	BY	DESCRIPTION	DATE	BY	DESCRIPTION

TRANSPORTATION
AECOM TECHNICAL SERVICES, Inc.
300 Colonial Center Pkwy, Suite 130
Lake Mary, FL. 32746
T 407.549.4200 F 407.549.4201
Certificate of Authorization No. 8115
DAVID S. BURWELL PE NO. 55853 www.aecom.com

STATE OF FLORIDA
DEPARTMENT OF TRANSPORTATION

ROAD NO.	COUNTY	FINANCIAL PROJECT ID
CFRC P2S	VARIOUS	423446-9-52-01

CENTRAL FLORIDA COMMUTER RAIL TRANSIT (CFCRT) PHASE 2 SOUTH

INDEX OF SHEETS

SHEET NO. 26

DRAWING NO.	SHEET NO.	TITLE
C18.018D	2121	POINCIANA VSLMF BORING LOCATION PLAN
C18.018E	2122	POINCIANA VSLMF SOIL SURVEY
C18.018F	2123	POINCIANA VSLMF TRACK AUGER BORING RESULTS
C18.018G	2124	POINCIANA VSLMF TRACK AUGER BORING RESULTS
C18.018H	2125	POINCIANA VSLMF SPT BORING RESULTS
C30.0501	263	DRAINAGE MAP
C30.0502	264	DRAINAGE MAP
C30.0503	265	DRAINAGE MAP
C30.0504	266	DRAINAGE MAP
C30.0505	267	DRAINAGE MAP
C30.0506	268	DRAINAGE MAP
C30.0507	269	DRAINAGE MAP
C30.0508	270	DRAINAGE MAP
C30.0509	271	DRAINAGE MAP
C30.0510	272	DRAINAGE MAP
C30.0511	273	DRAINAGE MAP
C30.0512	274	DRAINAGE MAP
C30.0513	275	DRAINAGE MAP
C30.0514	276	DRAINAGE MAP
C30.0515	277	DRAINAGE MAP
C30.0516	278	DRAINAGE MAP
C30.0517	279	DRAINAGE MAP
C30.0518	280	DRAINAGE MAP
C30.0519	281	DRAINAGE MAP
C30.0520	282	MP 800.6 BRIDGE HYDRAULIC RECOMMENDATION SHEET
C30.0520A	283	MP 811.3 BRIDGE HYDRAULIC RECOMMENDATION SHEET
C30.0521	284	SUMMARY OF DRAINAGE STRUCTURES
C30.0522	285	SUMMARY OF DRAINAGE STRUCTURES
C30.0523	286	SUMMARY OF DRAINAGE STRUCTURES
C30.0524	287	SUMMARY OF DRAINAGE STRUCTURES
C30.0525	288	SUMMARY OF DRAINAGE STRUCTURES
C30.0527	289	SUMMARY OF DRAINAGE STRUCTURES
C30.0528	290	OPTIONAL MATERIALS SYSTEMS
C30.0530	291	DRAINAGE DETAILS
C30.0531	292	DRAINAGE DETAILS
C30.0532	377	DRAINAGE PLAN AND PROFILE
C30.0533	378	DRAINAGE PLAN AND PROFILE
C30.0534	379	DRAINAGE PLAN AND PROFILE
C30.0535	380	DRAINAGE PLAN AND PROFILE
C30.0536	381	DRAINAGE PLAN AND PROFILE
C30.0537	382	DRAINAGE PLAN AND PROFILE
C30.0538	383	DRAINAGE PLAN AND PROFILE
C30.0539	384	DRAINAGE PLAN AND PROFILE
C30.0540	385	DRAINAGE PLAN AND PROFILE
C30.0541	386	DRAINAGE PLAN AND PROFILE
C30.0542	387	DRAINAGE PLAN AND PROFILE
C30.0543	388	DRAINAGE PLAN AND PROFILE
C30.0544	389	DRAINAGE PLAN AND PROFILE
C30.0545	390	DRAINAGE PLAN AND PROFILE
C30.0546	391	DRAINAGE PLAN AND PROFILE
C30.0547	392	DRAINAGE PLAN AND PROFILE
C30.0548	393	DRAINAGE PLAN AND PROFILE
C30.0549	394	DRAINAGE PLAN AND PROFILE
C30.0550	395	DRAINAGE PLAN AND PROFILE
C30.0551	396	DRAINAGE PLAN AND PROFILE
C30.0552	397	DRAINAGE PLAN AND PROFILE
C30.0553	398	DRAINAGE PLAN AND PROFILE
C30.0554	399	DRAINAGE PLAN AND PROFILE
C30.0555	400	DRAINAGE PLAN AND PROFILE
C30.0556	401	DRAINAGE PLAN AND PROFILE
C30.0557	402	DRAINAGE PLAN AND PROFILE
C30.0558	403	DRAINAGE PLAN AND PROFILE
C30.0559	404	DRAINAGE PLAN AND PROFILE
C30.0560	405	DRAINAGE PLAN AND PROFILE
C30.0561	406	DRAINAGE PLAN AND PROFILE
C30.0562	407	DRAINAGE PLAN AND PROFILE
C30.0563	408	DRAINAGE PLAN AND PROFILE
C30.0564	409	DRAINAGE PLAN AND PROFILE
C30.0565	410	DRAINAGE PLAN AND PROFILE
C30.0566	411	DRAINAGE PLAN AND PROFILE
C30.0567	412	DRAINAGE PLAN AND PROFILE
C30.0568	413	DRAINAGE PLAN AND PROFILE
C30.0569	414	DRAINAGE PLAN AND PROFILE
C30.0570	415	DRAINAGE PLAN AND PROFILE
C30.0571	416	DRAINAGE PLAN AND PROFILE
C30.0572	417	DRAINAGE PLAN AND PROFILE
C30.0573	418	DRAINAGE PLAN AND PROFILE
C30.0574	419	DRAINAGE PLAN AND PROFILE
C30.0575	420	DRAINAGE PLAN AND PROFILE
C30.0576	421	DRAINAGE PLAN AND PROFILE
C30.0577	422	DRAINAGE PLAN AND PROFILE
C30.0578	423	DRAINAGE PLAN AND PROFILE
C30.0579	424	DRAINAGE PLAN AND PROFILE
C30.0580	425	DRAINAGE PLAN AND PROFILE
C30.0581	426	DRAINAGE PLAN AND PROFILE
C30.0582	427	DRAINAGE PLAN AND PROFILE
C30.0583	428	DRAINAGE PLAN AND PROFILE
C30.0584	429	DRAINAGE PLAN AND PROFILE
C30.0585	430	DRAINAGE PLAN AND PROFILE
C30.0586	431	DRAINAGE PLAN AND PROFILE
C30.0587	432	DRAINAGE PLAN AND PROFILE
C30.0588	433	DRAINAGE PLAN AND PROFILE
C30.0589	434	DRAINAGE PLAN AND PROFILE
C30.0590	435	DRAINAGE PLAN AND PROFILE
C30.0591	436	DRAINAGE PLAN AND PROFILE
C30.0592	437	DRAINAGE PLAN AND PROFILE
C30.0593	438	DRAINAGE PLAN AND PROFILE
C30.0594	439	DRAINAGE PLAN AND PROFILE
C30.0595	440	DRAINAGE PLAN AND PROFILE
C30.0596	441	DRAINAGE PLAN AND PROFILE
C30.0597	1131	STORMWATER POLLUTION PREVENTION PLAN
C30.0598	1132	STORMWATER POLLUTION PREVENTION PLAN
C30.0599	1133	WETLAND IMPACTS / SWPPP
C30.0600	1134	WETLAND IMPACTS / SWPPP
C30.0601	1135	WETLAND IMPACTS / SWPPP
C30.0602	1136	WETLAND IMPACTS / SWPPP
C30.0603	1137	WETLAND IMPACTS / SWPPP
C30.0604	1138	WETLAND IMPACTS / SWPPP
C30.0605	1139	WETLAND IMPACTS / SWPPP
C30.0606	1140	WETLAND IMPACTS / SWPPP
C30.0607	1141	WETLAND IMPACTS / SWPPP
C30.0608	1142	WETLAND IMPACTS / SWPPP
C30.0609	1143	WETLAND IMPACTS / SWPPP
C30.0610	1144	WETLAND IMPACTS / SWPPP
C30.0611	1145	WETLAND IMPACTS / SWPPP
C30.0612	1146	WETLAND IMPACTS / SWPPP

NOTICE: THE OFFICIAL RECORD OF THIS SHEET IS THE ELECTRONIC FILE SIGNED AND SEALED UNDER RULE 61G15-23.003, F.A.C.

REVISIONS					
DATE	BY	DESCRIPTION	DATE	BY	DESCRIPTION

TRANSPORTATION
AECOM TECHNICAL SERVICES, Inc.
300 Colonial Center Pkwy, Suite 130
Lake Mary, FL. 32746
T 407.549.4200 F 407.549.4201
Certificate of Authorization No. 8115
DAVID S. BURWELL PE NO. 55853 www.aecom.com

STATE OF FLORIDA
DEPARTMENT OF TRANSPORTATION

ROAD NO.	COUNTY	FINANCIAL PROJECT ID
CFRC P2S	VARIOUS	423446-9-52-01

CENTRAL FLORIDA COMMUTER RAIL TRANSIT (CFCRT) PHASE 2 SOUTH

INDEX OF SHEETS

SHEET NO. 27

DRAWING NO.
C00.001HH

DRAWING NO.	SHEET NO.	TITLE
~~C30.0613~~	~~1147~~	~~WETLAND IMPACTS / SWPPP~~
~~C30.0614~~	~~1148~~	~~WETLAND IMPACTS / SWPPP~~
~~C30.0615~~	~~1149~~	~~WETLAND IMPACTS / SWPPP~~
~~C30.0616~~	~~1150~~	~~WETLAND IMPACTS / SWPPP~~
~~C30.0617~~	~~1151~~	~~WETLAND IMPACTS / SWPPP~~
~~C30.0618~~	~~1152~~	~~WETLAND IMPACTS / SWPPP~~
~~C30.0619~~	~~1153~~	~~WETLAND IMPACTS / SWPPP~~
~~C30.0620~~	~~1154~~	~~WETLAND IMPACTS / SWPPP~~
~~C30.0621~~	~~1155~~	~~WETLAND IMPACTS / SWPPP~~
~~C30.0622~~	~~1156~~	~~WETLAND IMPACTS / SWPPP~~
~~C30.0623~~	~~1157~~	~~WETLAND IMPACTS / SWPPP~~
~~C30.0624~~	~~1158~~	~~WETLAND IMPACTS / SWPPP~~
~~C30.0625~~	~~1159~~	~~WETLAND IMPACTS / SWPPP~~
~~C30.0626~~	~~1160~~	~~WETLAND IMPACTS / SWPPP~~
~~C30.0627~~	~~1161~~	~~WETLAND IMPACTS / SWPPP~~
~~C30.0628~~	~~1162~~	~~WETLAND IMPACTS / SWPPP~~
~~C30.0629~~	~~1163~~	~~WETLAND IMPACTS / SWPPP~~
~~C30.0630~~	~~1164~~	~~WETLAND IMPACTS / SWPPP~~
~~C30.0631~~	~~1165~~	~~WETLAND IMPACTS / SWPPP~~
~~C30.0632~~	~~1166~~	~~WETLAND IMPACTS / SWPPP~~
~~C30.0633~~	~~1167~~	~~WETLAND IMPACTS / SWPPP~~
~~C30.0801~~	~~619~~	~~SOIL SURVEY~~
~~C7998.001~~	~~1239~~	~~REPORT OF SPT BORINGS FOR STRUCTURES~~
~~C8006.001~~	~~1259~~	~~BORING AND MUCK PROBE LOCATION PLAN~~
~~C8006.002~~	~~1260~~	~~REPORT OF SPT BORINGS FOR STRUCTURES~~
~~C8006.003~~	~~1261~~	~~REPORT OF SPT BORINGS FOR STRUCTURES~~
~~C8006.004~~	~~1262~~	~~REPORT OF SPT BORINGS FOR STRUCTURES~~
~~C8039.001~~	~~1270~~	~~BORING AND MUCK PROBE LOCATION PLAN~~
~~C8039.002~~	~~1271~~	~~REPORT OF SPT BORINGS FOR STRUCTURES~~
~~C8039.003~~	~~1272~~	~~REPORT OF SPT BORINGS FOR STRUCTURES~~
~~C8059.001~~	~~1280~~	~~BORING AND MUCK PROBE LOCATION PLAN~~
~~C8059.002~~	~~1281~~	~~REPORT OF SPT BORINGS FOR STRUCTURES~~
~~C8059.003~~	~~1282~~	~~REPORT OF SPT BORINGS FOR STRUCTURES~~
~~C8067.3.001~~	~~1287~~	~~REPORT OF SPT BORINGS FOR STRUCTURES~~
~~C8068O.001~~	~~1289~~	~~REPORT OF SPT BORINGS FOR STRUCTURES~~
~~C8068S.001~~	~~1299~~	~~REPORT OF SPT BORINGS FOR STRUCTURES~~
~~C8070B.001~~	~~1301~~	~~REPORT OF SPT BORINGS FOR STRUCTURES~~
~~C8089B.001~~	~~1306~~	~~REPORT OF SPT BORINGS FOR STRUCTURES~~
~~C8113.001~~	~~1315~~	~~BORING LOCATION PLAN~~
~~C8113.002~~	~~1316~~	~~REPORT OF SPT BORINGS FOR STRUCTURES~~
~~C8113.003~~	~~1317~~	~~REPORT OF SPT BORINGS FOR STRUCTURES~~
~~C8113.004~~	~~1318~~	~~REPORT OF SPT BORINGS FOR STRUCTURES~~
~~C8113.005~~	~~1319~~	~~REPORT OF SPT BORINGS FOR STRUCTURES~~
~~C8113.006~~	~~1320~~	~~REPORT OF SPT BORINGS FOR STRUCTURES~~
~~C8113.007~~	~~1321~~	~~REPORT OF SPT BORINGS FOR STRUCTURES~~
~~C8131.001~~	~~1366~~	~~BORING AND MUCK PROBE LOCATION PLAN~~
~~C8131.002~~	~~1367~~	~~REPORT OF SPT BORINGS FOR STRUCTURES~~
~~C8131.003~~	~~1368~~	~~REPORT OF SPT BORINGS FOR STRUCTURES~~
~~C8135S.001~~	~~1370~~	~~REPORT OF SPT BORINGS FOR STRUCTURES~~
E00.701	199	ELECTRICAL DETAILS
E00.702	200	ELECTRICAL DETAILS
E00.703	201	ELECTRICAL DETAILS
E00.704	202	ELECTRICAL DETAILS
E00.705	203	ELECTRICAL DETAILS
E00.706	204	ELECTRICAL PANEL SCHEDULES
E00.707	205	ELECTRICAL PANEL SCHEDULES
E00.708	206	ELECTRICAL PANEL SCHEDULES
E00.709	207	ELECTRICAL PANEL SCHEDULES
E00.710	208	ELECTRICAL PANEL SCHEDULES
E00.711	209	ELECTRICAL PANEL SCHEDULES
E00.712	210	ELECTRICAL PANEL SCHEDULES
E00.713	211	ELECTRICAL PANEL SCHEDULES
E00.714	212	ELECTRICAL PANEL SCHEDULES
E00.715	213	ELECTRICAL PANEL SCHEDULES
E00.716	214	ELECTRICAL PANEL SCHEDULES
E00.717	215	ELECTRICAL PANEL SCHEDULES
E00.718	222	LIGHT FIXTURES
~~E00.719~~	~~216~~	~~ELECTRICAL PANEL SCHEDULES~~
~~E00.720~~	~~217~~	~~ELECTRICAL PANEL SCHEDULES~~
~~E00.721~~	~~218~~	~~ELECTRICAL PANEL SCHEDULES~~
~~E00.722~~	~~219~~	~~ELECTRICAL PANEL SCHEDULES~~
~~E00.723~~	~~220~~	~~ELECTRICAL PANEL SCHEDULES~~
~~E00.724~~	~~221~~	~~ELECTRICAL PANEL SCHEDULES~~
E14.001	1570	MEADOW WOODS STATION ONE-LINE DIAGRAM & SCHEDULE
E14.002	1571	MEADOW WOODS STATION SITE PLAN 1
E14.003	1572	MEADOW WOODS STATION SITE PLAN 2
E14.004	1573	MEADOW WOODS STATION SITE PLAN 3
E14.005	1574	MEADOW WOODS STATION SITE PLAN 4
E14.201	1575	MEADOW WOODS STATION ELECTRICAL PLAN 1
E14.202	1576	MEADOW WOODS STATION ELECTRICAL PLAN 2
E14.301	1577	MEADOW WOODS STATION LIGHTING PLAN 1
E14.302	1578	MEADOW WOODS STATION LIGHTING PLAN 2
E15.001	1742	OSCEOLA PARKWAY STATION ONE-LINE DIAGRAM & SCHEDULES
E15.002	1743	OSCEOLA PARKWAY STATION SITE PLAN 1
E15.003	1744	OSCEOLA PARKWAY STATION SITE PLAN 2
E15.004	1745	OSCEOLA PARKWAY STATION SITE PLAN 3
E15.201	1746	OSCEOLA PARKWAY STATION ELECTRICAL PLAN 1
E15.202	1747	OSCEOLA PARKWAY STATION ELECTRICAL PLAN 2
E15.301	1748	OSCEOLA PARKWAY STATION LIGHTING PLAN 1
E15.302	1749	OSCEOLA PARKWAY STATION LIGHTING PLAN 2
E16.001	1848	KISSIMMEE STATION ONE-LINE DIAGRAM & SCHEDULES
E16.002	1849	KISSIMMEE STATION ELECTRICAL SITE PLAN
E16.201	1850	KISSIMMEE STATION ELECTRICAL PLAN 1
E16.202	1851	KISSIMMEE STATION ELECTRICAL PLAN 2
E16.301	1852	KISSIMMEE STATION LIGHTING PLAN 1
E16.302	1853	KISSIMMEE STATION LIGHTING PLAN 2
E17.001	2057	POINCIANA STATION ONE-LINE DIAGRAM & SCHEDULES
E17.002	2058	POINCIANA STATION OVERALL ELECTRICAL SITE
E17.003	2059	POINCIANA STATION ELECTRICAL SITE PLAN 1
E17.004	2060	POINCIANA STATION SITE PLAN 2
E17.005	2061	POINCIANA STATION SITE PLAN 3
E17.006	2062	POINCIANA STATION SITE PLAN 4
E17.007	2063	POINCIANA STATION SITE PLAN 5
E17.008	2064	POINCIANA STATION SITE PLAN 6
E17.009	2065	POINCIANA STATION SITE PLAN 7
E17.010	2066	POINCIANA STATION SITE PLAN 8
E17.201	2067	POINCIANA STATION ELECTRICAL PLAN 1
E17.202	2068	POINCIANA STATION ELECTRICAL PLAN 2
E17.301	2069	POINCIANA STATION LIGHTING PLAN 1
E17.302	2070	POINCIANA STATION LIGHTING PLAN 2
~~E18.007~~	~~2158~~	~~VSLMF OVERALL ELECTRICAL SITE PLAN~~
~~E18.007A~~	~~2159~~	~~VSLMF AREA A ELECTRICAL SITE PLAN~~
~~E18.007B~~	~~2160~~	~~VSLMF AREA B ELECTRICAL SITE PLAN~~
~~E18.007C~~	~~2161~~	~~VSLMF AREA C ELECTRICAL SITE PLAN~~
~~E18.007D~~	~~2162~~	~~VSLMF AREA D ELECTRICAL SITE PLAN~~
~~E18.007E~~	~~2163~~	~~VSLMF AREA E ELECTRICAL SITE PLAN~~

NOTICE: THE OFFICIAL RECORD OF THIS SHEET IS THE ELECTRONIC FILE SIGNED AND SEALED UNDER RULE 61G15-23.003, F.A.C.

REVISIONS

DATE	BY	DESCRIPTION	DATE	BY	DESCRIPTION

TRANSPORTATION
AECOM TECHNICAL SERVICES, Inc.
300 Colonial Center Pkwy, Suite 130
Lake Mary, FL. 32746
T 407.549.4200 F 407.549.4201
Certificate of Authorization No. 8115
DAVID S. BURWELL PE NO. 55853 www.aecom.com

STATE OF FLORIDA
DEPARTMENT OF TRANSPORTATION

ROAD NO.	COUNTY	FINANCIAL PROJECT ID
CFRC P2S	VARIOUS	423446-9-52-01

CENTRAL FLORIDA COMMUTER RAIL TRANSIT (CFCRT) PHASE 2 SOUTH

INDEX OF SHEETS

SHEET NO. 28

DRAWING NO.	SHEET NO.	TITLE
~~EI8.102~~	~~2164~~	~~VSLMF CREW BUILDING LIGHTING FIXTURE SCHEDULE~~
~~EI8.201~~	~~2165~~	~~VSLMF CREW BUILDING ELECTRICAL PLAN~~
~~EI8.202~~	~~2166~~	~~VSLMF CREW BUILDING ELECTRICAL ROOF PLAN~~
~~EI8.301~~	~~2167~~	~~VSLMF CREW BUILDING LIGHTING PLAN~~
~~EI8.401~~	~~2168~~	~~VSLMF CREW BUILDING ELECTRICAL RISER DIAGRAM~~
~~EI8.402~~	~~2169~~	~~SERVICE YARD ELECTRICAL RISER DIAGRAM~~
~~FPI8.007E~~	~~2191~~	~~VSLMF AREA E FIRE PROTECTION SITE PLAN~~
~~FPI8.008~~	~~2195~~	~~VSLMF FIRE PROTECTION SITE PLAN~~
~~FPI8.008A~~	~~2196~~	~~VSLMF FIRE PROTECTION SITE PLAN~~
~~FPI8.008B~~	~~2197~~	~~VSLMF FIRE PROTECTION SITE PLAN~~
~~FPI8.008C~~	~~2198~~	~~VSLMF FIRE PROTECTION SITE PLAN~~
~~FPI8.008D~~	~~2199~~	~~VSLMF FIRE PROTECTION SITE PLAN~~
~~FPI8.008E~~	~~2200~~	~~VSLMF FIRE PROTECTION SITE PLAN~~
~~FPI8.201~~	~~2192~~	~~VSLMF CREW BUILDING OVERALL FIRE PROTECTION PLAN~~
~~FPI8.251~~	~~2193~~	~~FIRE PROTECTION DETAILS~~
~~FPI8.252~~	~~2194~~	~~FIRE PROTECTION DETAILS~~
~~FPI8.720~~	~~2201~~	~~VSLMF FIRE PROTECTION DETAILS~~
~~FPI8.721~~	~~2202~~	~~VSLMF FIRE PROTECTION DETAILS~~
~~FPI8.722~~	~~2203~~	~~VSLMF FIRE PROTECTION DETAILS~~
HI4.007	1520	MEADOW WOODS STATION HARDSCAPE PLAN
HI4.007A	1521	MEADOW WOODS STATION HARDSCAPE PLAN - 'A'
HI4.007B	1522	MEADOW WOODS STATION HARDSCAPE PLAN - 'B'
HI4.007C	1523	MEADOW WOODS STATION HARDSCAPE PLAN - 'C'
HI4.007D	1524	MEADOW WOODS STATION HARDSCAPE PLAN - 'D'
HI4.007E	1525	MEADOW WOODS STATION HARDSCAPE PLAN - 'E'
HI4.007F	1526	MEADOW WOODS STATION HARDSCAPE PLAN - 'F'
HI4.007G	1527	MEADOW WOODS STATION HARDSCAPE PLAN - 'G'
HI4.007H	1528	MEADOW WOODS STATION HARDSCAPE PLAN - 'H'
HI4.007I	1529	MEADOW WOODS STATION HARDSCAPE PLAN - 'I'
HI4.007J	1530	MEADOW WOODS STATION HARDSCAPE PLAN - 'J'
HI4.007K	1531	MEADOW WOODS STATION HARDSCAPE PLAN - 'K'
HI4.007L	1532	MEADOW WOODS STATION HARDSCAPE PLAN - 'L'
HI4.007M	1533	MEADOW WOODS STATION HARDSCAPE PLAN - 'M'
HI4.007N	1534	MEADOW WOODS STATION HARDSCAPE PLAN - 'N
HI4.007O	1535	MEADOW WOODS STATION HARDSCAPE PLAN - 'O'
HI4.007P	1536	MEADOW WOODS STATION HARDSCAPE PLAN - 'P'
HI4.007Q	1537	MEADOW WOODS STATION HARDSCAPE PLAN - 'Q'
HI5.007	1692	OSCEOLA PARKWAY STATION HARDSCAPE PLAN
HI5.007A	1693	OSCEOLA PARKWAY STATION HARDSCAPE PLAN - 'A'
HI5.007B	1694	OSCEOLA PARKWAY STATION HARDSCAPE PLAN - 'B'
HI5.007C	1695	OSCEOLA PARKWAY STATION HARDSCAPE PLAN - 'C'
HI5.007D	1696	OSCEOLA PARKWAY STATION HARDSCAPE PLAN - 'D'
HI5.007E	1697	OSCEOLA PARKWAY STATION HARDSCAPE PLAN - 'E'
HI5.007F	1698	OSCEOLA PARKWAY STATION HARDSCAPE PLAN - 'F'
HI5.007G	1699	OSCEOLA PARKWAY STATION HARDSCAPE PLAN - 'G'
HI5.007H	1700	OSCEOLA PARKWAY STATION HARDSCAPE PLAN - 'H'
HI5.007I	1701	OSCEOLA PARKWAY STATION HARDSCAPE PLAN - 'I'
HI5.007J	1702	OSCEOLA PARKWAY STATION HARDSCAPE PLAN - 'J'
HI5.007K	1703	OSCEOLA PARKWAY STATION HARDSCAPE PLAN - 'K'
HI5.007L	1704	OSCEOLA PARKWAY STATION HARDSCAPE PLAN - 'L'
HI5.007M	1705	OSCEOLA PARKWAY STATION HARDSCAPE PLAN - 'M'
HI5.007N	1706	OSCEOLA PARKWAY STATION HARDSCAPE PLAN - 'N'
HI5.007O	1707	OSCEOLA PARKWAY STATION HARDSCAPE PLAN - 'O'
HI6.007	1812	KISSIMMEE STATION HARDSCAPE PLAN
HI6.007C	1813	KISSIMMEE STATION HARDSCAPE PLAN - 'C'
HI6.007D	1814	KISSIMMEE STATION HARDSCAPE PLAN - 'D'
HI6.007E	1815	KISSIMMEE STATION HARDSCAPE PLAN - 'E'
HI6.007F	1816	KISSIMMEE STATION HARDSCAPE PLAN - 'F'

DRAWING NO.	SHEET NO.	TITLE
HI7.007	1987	POINCIANA STATION HARDSCAPE PLAN
HI7.007A	1988	POINCIANA STATION HARDSCAPE PLAN - 'A'
HI7.007B	1989	POINCIANA STATION HARDSCAPE PLAN - 'B'
HI7.007C	1990	POINCIANA STATION HARDSCAPE PLAN - 'C'
HI7.007D	1991	POINCIANA STATION HARDSCAPE PLAN - 'D'
HI7.007E	1992	POINCIANA STATION HARDSCAPE PLAN - 'E'
HI7.007F	1993	POINCIANA STATION HARDSCAPE PLAN - 'F'
HI7.007G	1994	POINCIANA STATION HARDSCAPE PLAN - 'G'
HI7.007H	1995	POINCIANA STATION HARDSCAPE PLAN - 'H'
HI7.007I	1996	POINCIANA STATION HARDSCAPE PLAN - 'I'
HI7.007J	1997	POINCIANA STATION HARDSCAPE PLAN - 'J'
HI7.007K	1998	POINCIANA STATION HARDSCAPE PLAN - 'K'
HI7.007L	1999	POINCIANA STATION HARDSCAPE PLAN - 'L'
HI7.007M	2000	POINCIANA STATION HARDSCAPE PLAN - 'M'
HI7.007N	2001	POINCIANA STATION HARDSCAPE PLAN - 'N'
HI7.007O	2002	POINCIANA STATION HARDSCAPE PLAN - 'O'
HI7.007P	2003	POINCIANA STATION HARDSCAPE PLAN - 'P'
HI7.007Q	2004	POINCIANA STATION HARDSCAPE PLAN - 'Q'
HI7.007R	2005	POINCIANA STATION HARDSCAPE PLAN - 'R'
H20.701	80	HARDSCAPE DETAILS PAVING DETAILS
H20.702	81	HARDSCAPE DETAILS PAVING DETAILS
H20.703	82	HARDSCAPE DETAILS PAVING DETAILS
H20.704	83	HARDSCAPE DETAILS PAVING DETAILS
H20.705	84	HARDSCAPE DETAILS PAVING DETAILS
H20.706	85	HARDSCAPE DETAILS PAVING DETAILS
H20.707	86	HARDSCAPE DETAILS PAVING DETAILS
H20.708	87	HARDSCAPE DETAILS PAVING DETAILS
H20.709	88	HARDSCAPE DETAILS PAVING DETAILS
H20.710	89	HARDSCAPE DETAILS PAVING DETAILS
H20.711	90	HARDSCAPE DETAILS FENCING DETAILS
~~H20.712~~	~~91~~	~~HARDSCAPE DETAILS FENCING DETAILS~~
H20.713	92	HARDSCAPE DETAILS WALL DETAILS
H20.714	93	HARDSCAPE DETAILS WALL DETAILS
H20.715	94	HARDSCAPE DETAILS SITE FURNINGS DETAILS
H20.716	95	HARDSCAPE DETAILS SITE AMENITIES DETAILS
H20.717	96	HARDSCAPE DETAILS SITE AMENITIES DETAILS
H20.718	97	HARDSCAPE DETAILS SITE FURNINGS DETAILS
H20.719	98	HARDSCAPE DETAILS SITE FURNINGS DETAILS
H20.720	99	HARDSCAPE DETAILS SITE FURNINGS DETAILS
H20.721	100	HARDSCAPE DETAILS SITE FURNINGS DETAILS
H20.722	1538	HARDSCAPE DETAILS MATERIALS SCHEDULE
H20.723	1708	HARDSCAPE DETAILS MATERIALS SCHEDULE
H20.724	1817	HARDSCAPE DETAILS MATERIALS SCHEDULE
H20.725	2006	HARDSCAPE DETAILS MATERIALS SCHEDULE
H20.726	101	HARDSCAPE DETAILS ART IN TRANSIT DETAILS
H20.727	102	HARDSCAPE DETAILS ART IN TRANSIT DETAILS
H20.728	103	HARDSCAPE DETAILS ART IN TRANSIT DETAILS
H20.729	104	HARDSCAPE DETAILS ART IN TRANSIT DETAILS
H20.730	105	HARDSCAPE DETAILS ART IN TRANSIT DETAILS
H20.731	106	HARDSCAPE DETAILS ART IN TRANSIT DETAILS
H20.732	107	HARDSCAPE DETAILS ART IN TRANSIT DETAILS
H20.763	108	HARDSCAPE DETAILS STRUCTURAL DETAILS
H20.764	109	HARDSCAPE DETAILS STRUCTURAL DETAILS
~~H20.765~~	~~110~~	~~HARDSCAPE DETAILS STRUCTURAL DETAILS~~
H20.766	111	HARDSCAPE DETAILS STRUCTURAL DETAILS
H20.767	112	HARDSCAPE DETAILS STRUCTURAL DETAILS
H20.768	113	HARDSCAPE DETAILS STRUCTURAL DETAILS
IRI4.007	1547	MEADOW WOODS STATION IRRIGATION PLAN

DRAWING NO.
C00.00111

NOTICE: THE OFFICIAL RECORD OF THIS SHEET IS THE ELECTRONIC FILE SIGNED AND SEALED UNDER RULE 61G15-23.003, F.A.C.

REVISIONS

DATE	BY	DESCRIPTION	DATE	BY	DESCRIPTION

TRANSPORTATION
AECOM TECHNICAL SERVICES, Inc.
300 Colonial Center Pkwy, Suite 130
Lake Mary, FL. 32746
T 407.549.4200 F 407.549.4201
Certificate of Authorization No. 8115
DAVID S. BURWELL PE NO. 55853 www.aecom.com

STATE OF FLORIDA
DEPARTMENT OF TRANSPORTATION

ROAD NO.	COUNTY	FINANCIAL PROJECT ID
CFRC P2S	VARIOUS	423446-9-52-01

CENTRAL FLORIDA COMMUTER RAIL TRANSIT (CFCRT) PHASE 2 SOUTH

INDEX OF SHEETS

SHEET NO.
29

DRAWING NO.	SHEET NO.	TITLE
IRI4.007A	1548	MEADOW WOODS STATION IRRIGATION PLAN - 'A'
IRI4.007B	1549	MEADOW WOODS STATION IRRIGATION PLAN - 'B'
IRI4.007C	1550	MEADOW WOODS STATION IRRIGATION PLAN - 'C'
IRI4.007D	1551	MEADOW WOODS STATION IRRIGATION PLAN - 'D'
IRI4.007E	1552	MEADOW WOODS STATION IRRIGATION PLAN - 'E'
IRI4.007F	1553	MEADOW WOODS STATION IRRIGATION PLAN - 'F'
IRI5.007	1718	OSCEOLA PARKWAY STATION IRRIGATION PLAN
IRI5.007A	1719	OSCEOLA PARKWAY STATION IRRIGATION PLAN - 'A'
IRI5.007B	1720	OSCEOLA PARKWAY STATION IRRIGATION PLAN - 'B'
IRI5.007C	1721	OSCEOLA PARKWAY STATION IRRIGATION PLAN - 'C'
IRI5.007D	1722	OSCEOLA PARKWAY STATION IRRIGATION PLAN - 'D'
IRI5.007E	1723	OSCEOLA PARKWAY STATION IRRIGATION PLAN - 'E'
IRI5.007F	1724	OSCEOLA PARKWAY STATION IRRIGATION PLAN - 'F'
IRI5.007G	1725	OSCEOLA PARKWAY STATION IRRIGATION PLAN - 'G'
IRI6.007	1825	KISSIMMEE STATION IRRIGATION PLAN
IRI6.007C	1826	KISSIMMEE STATION IRRIGATION PLAN - 'C'
IRI6.007D	1827	KISSIMMEE STATION IRRIGATION PLAN - 'D'
IRI6.709	1828	KISSIMMEE STATION IRRIGATION DETAILS
IRI6.710	1829	KISSIMMEE STATION IRRIGATION DETAILS
IRI6.711	1830	KISSIMMEE STATION IRRIGATION DETAILS
IRI6.712	1831	KISSIMMEE STATION IRRIGATION NOTES
IRI7.007	2030	POINCIANA STATION IRRIGATION PLAN
IRI7.007A	2031	POINCIANA STATION IRRIGATION PLAN - 'A'
IRI7.007B	2032	POINCIANA STATION IRRIGATION PLAN - 'B'
IRI7.007C	2033	POINCIANA STATION IRRIGATION PLAN - 'C'
IRI7.007D	2034	POINCIANA STATION IRRIGATION PLAN - 'D'
IRI7.007E	2035	POINCIANA STATION IRRIGATION PLAN - 'E'
IRI7.007F	2036	POINCIANA STATION IRRIGATION PLAN - 'F'
IRI7.007G	2037	POINCIANA STATION IRRIGATION PLAN - 'G'
IRI7.007H	2038	POINCIANA STATION IRRIGATION PLAN - 'H'
IRI7.007I	2039	POINCIANA STATION IRRIGATION PLAN - 'I'
IRI7.007J	2040	POINCIANA STATION IRRIGATION PLAN - 'J'
IR20.701	1554	MEADOW WOODS STATION IRRIGATION DETAILS
IR20.702	1555	MEADOW WOODS STATION IRRIGATION DETAILS
IR20.703	1556	MEADOW WOODS STATION IRRIGATION DETAILS
IR20.704	1557	MEADOW WOODS STATION IRRIGATION DETAILS
IR20.705	1726	OSCEOLA PARKWAY STATION IRRIGATION DETAILS
IR20.706	1727	OSCEOLA PARKWAY STATION IRRIGATION DETAILS
IR20.707	1728	OSCEOLA PARKWAY STATION IRRIGATION DETAILS
IR20.708	1729	OSCEOLA PARKWAY STATION IRRIGATION NOTES
IR20.713	2041	POINCIANA STATION IRRIGATION DETAILS
IR20.714	2042	POINCIANA STATION IRRIGATION DETAILS
IR20.715	2043	POINCIANA STATION IRRIGATION DETAILS
IR20.716	2044	POINCIANA STATION IRRIGATION NOTES
LI4.007	1539	MEADOW WOODS STATION LANDSCAPE PLAN
LI4.007A	1540	MEADOW WOODS STATION LANDSCAPE PLAN - 'A'
LI4.007B	1541	MEADOW WOODS STATION LANDSCAPE PLAN - 'B'
LI4.007C	1542	MEADOW WOODS STATION LANDSCAPE PLAN - 'C'
LI4.007D	1543	MEADOW WOODS STATION LANDSCAPE PLAN - 'D'
LI4.007E	1544	MEADOW WOODS STATION LANDSCAPE PLAN - 'E'
LI4.007F	1545	MEADOW WOODS STATION LANDSCAPE PLAN - 'F'
LI5.007	1709	OSCEOLA PARKWAY STATION LANDSCAPE PLAN
LI5.007A	1710	OSCEOLA PARKWAY STATION LANDSCAPE PLAN - 'A'
LI5.007B	1711	OSCEOLA PARKWAY STATION LANDSCAPE PLAN - 'B'
LI5.007C	1712	OSCEOLA PARKWAY STATION LANDSCAPE PLAN - 'C'
LI5.007D	1713	OSCEOLA PARKWAY STATION LANDSCAPE PLAN - 'D'
LI5.007E	1714	OSCEOLA PARKWAY STATION LANDSCAPE PLAN - 'E'
LI5.007F	1715	OSCEOLA PARKWAY STATION LANDSCAPE PLAN - 'F'

DRAWING NO.	SHEET NO.	TITLE
LI5.007G	1716	OSCEOLA PARKWAY STATION LANDSCAPE PLAN - 'G'
LI6.006	1818	KISSIMMEE STATION TREE SAVE PLAN
LI6.006C	1819	KISSIMMEE STATION TREE SAVE PLAN - 'C'
LI6.006D	1820	KISSIMMEE STATION TREE SAVE PLAN - 'D'
LI6.007	1821	KISSIMMEE STATION LANDSCAPE PLAN
LI6.007C	1822	KISSIMMEE STATION LANDSCAPE PLAN - 'C'
LI6.007D	1823	KISSIMMEE STATION LANDSCAPE PLAN - 'D'
LI7.006	2007	POINCIANA STATION TREE SAVE PLAN
LI7.006A	2008	POINCIANA STATION TREE SAVE PLAN - 'A'
LI7.006B	2009	POINCIANA STATION TREE SAVE PLAN - 'B'
LI7.006C	2010	POINCIANA STATION TREE SAVE PLAN - 'C'
LI7.006D	2011	POINCIANA STATION TREE SAVE PLAN - 'D'
LI7.006E	2012	POINCIANA STATION TREE SAVE PLAN - 'E'
LI7.006F	2013	POINCIANA STATION TREE SAVE PLAN - 'F'
LI7.006G	2014	POINCIANA STATION TREE SAVE PLAN - 'G'
LI7.006H	2015	POINCIANA STATION TREE SAVE PLAN - 'H'
LI7.006I	2016	POINCIANA STATION TREE SAVE PLAN - 'I'
LI7.006J	2017	POINCIANA STATION TREE SAVE PLAN - 'J'
LI7.007	2018	POINCIANA STATION LANDSCAPE PLAN
LI7.007A	2019	POINCIANA STATION LANDSCAPE PLAN - 'A'
LI7.007B	2020	POINCIANA STATION LANDSCAPE PLAN - 'B'
LI7.007C	2021	POINCIANA STATION LANDSCAPE PLAN - 'C'
LI7.007D	2022	POINCIANA STATION LANDSCAPE PLAN - 'D'
LI7.007E	2023	POINCIANA STATION LANDSCAPE PLAN - 'E'
LI7.007F	2024	POINCIANA STATION LANDSCAPE PLAN - 'F'
LI7.007G	2025	POINCIANA STATION LANDSCAPE PLAN - 'G'
LI7.007H	2026	POINCIANA STATION LANDSCAPE PLAN - 'H'
LI7.007I	2027	POINCIANA STATION LANDSCAPE PLAN - 'I'
LI7.007J	2028	POINCIANA STATION LANDSCAPE PLAN - 'J'
L20.701	1546	MEADOW WOODS STATION MASTER PLANT LIST
L20.702	1717	OSCEOLA PARKWAY STATION MASTER PLANT LIST
L20.703	1824	KISSIMMEE STATION MASTER PLANT LIST
L20.704	2029	POINCIANA STATION MASTER PLANT LIST
L20.705	114	TYPICAL LANDSCAPE DETAILS MEADOW WOODS STATION
L20.706	115	TYPICAL LANDSCAPE DETAILS MEADOW WOODS STATION
L20.707	116	TYPICAL LANDSCAPE DETAILS OSCEOLA PARKWAY STATION
L20.708	117	TYPICAL LANDSCAPE DETAILS KISSIMMEE STATION
L20.709	118	TYPICAL LANDSCAPE DETAILS POINCIANA STATION
L20.710	119	TYPICAL LANDSCAPE DETAILS
M00.004	252	COMMUNICATIONS CONDUIT & CABLE SCHEDULE
M00.005	253	NETWORK BLOCK DIAGRAM
MI4.301	1608	MEADOW WOODS COMMUNICATIONS CEILING PLAN 1 OF 2
MI4.302	1609	MEADOW WOODS COMMUNICATIONS CEILING PLAN 2 OF 2
MI5.301	1779	OSCEOLA COMMUNICATION CEILING PLAN 1 OF 2
MI5.302	1780	OSCEOLA COMMUNICATION CEILING PLAN 2 OF 2
MI6.301	1879	KISSIMMEE COMMUNICATION CEILING PLAN 1 OF 2
MI6.302	1880	KISSIMMEE COMMUNICATION CEILING PLAN 1 OF 3
MI7.301	2104	POINCIANA COMMUNICATION CEILING PLAN 1 OF 2
MI7.302	2105	POINCIANA COMMUNICATION CEILING PLAN 2 OF 2
~~MI8.007~~	~~2212~~	~~POINCIANA LAYOVER FACILITY COMMUNICATIONS SITE PLAN~~
~~MI8.007A~~	~~2213~~	~~POINCIANA LAYOVER FACILITY COMMUNICATIONS SITE PLAN~~
~~MI8.007B~~	~~2214~~	~~POINCIANA LAYOVER FACILITY COMMUNICATIONS SITE PLAN~~
~~MI8.007C~~	~~2215~~	~~POINCIANA LAYOVER FACILITY COMMUNICATIONS SITE PLAN~~
~~MI8.007D~~	~~2216~~	~~POINCIANA LAYOVER FACILITY COMMUNICATIONS SITE PLAN~~
~~MI8.007E~~	~~2217~~	~~POINCIANA LAYOVER FACILITY COMMUNICATIONS SITE PLAN~~
~~MI8.201~~	~~2218~~	~~POINCIANA LAYOVER FACILITY COMM CREW BUILDING PLAN~~
~~MI8.202~~	~~2219~~	~~POINCIANA LAYOVER FACILITY COMMUNICATIONS WIRING DETAILS~~
M20.701	254	TYPE I TYPICAL STATION ELECTRONICS DETAILS 1 OF 3

DRAWING NO.
C00.001JJ

NOTICE: THE OFFICIAL RECORD OF THIS SHEET IS THE ELECTRONIC FILE SIGNED AND SEALED UNDER RULE 61G15-23.003, F.A.C.

REVISIONS

DATE	BY	DESCRIPTION	DATE	BY	DESCRIPTION

TRANSPORTATION
AECOM TECHNICAL SERVICES, Inc.
300 Colonial Center Pkwy, Suite 130
Lake Mary, FL. 32746
T 407.549.4200 F 407.549.4201
Certificate of Authorization No. 8115
DAVID S. BURWELL PE NO. 55853 www.aecom.com

STATE OF FLORIDA
DEPARTMENT OF TRANSPORTATION

ROAD NO.	COUNTY	FINANCIAL PROJECT ID
CFRC P2S	VARIOUS	423446-9-52-01

CENTRAL FLORIDA COMMUTER RAIL TRANSIT (CFCRT) PHASE 2 SOUTH

INDEX OF SHEETS

SHEET NO.
30

DRAWING NO.
C00.00IKK

DRAWING NO.	SHEET NO.	TITLE
M20.702	255	TYPE I TYPICAL STATION ELECTRONICS DETAILS 2 OF 3
M20.704	256	TYPE I TYPICAL STATION ELECTRONICS DETAILS 3 OF 3
M20.709	257	TYPICAL STATION UTILITY YARD CEC DETAILS
M20.710	258	TYPICAL STATION DETAILS 1 OF 4
M20.711	259	TYPICAL STATION DETAILS 2 OF 4
M20.712	260	TYPICAL STATION DETAILS 3 OF 4
M20.713	261	TYPICAL STATION DETAILS 4 OF 4
M20.714	262	TYPICAL MOUNTING DETAIL
~~M20.766~~	~~1436~~	~~ITS DUCT PLAN DETAILS PULL & JUNCTION BOX SPECIAL 1 OF 2~~
~~M20.767~~	~~1437~~	~~ITS DUCT PLAN DETAILS PULL & JUNCTION BOX SPECIAL 2 OF 2~~
~~M20.768~~	~~1438~~	~~ITS DUCT PLAN DETAILS FIBER OPTIC PULL BOX~~
~~M20.769~~	~~1439~~	~~ITS DUCT PLAN DETAILS TYPICAL DIRECTIONAL BORE~~
~~M20.770~~	~~1440~~	~~ITS DUCT PLAN DETAILS TYP. INTERMEDIATE POINT~~
~~M30.001~~	~~1371~~	~~ITS DUCT PLAN~~
~~M30.002~~	~~1372~~	~~ITS DUCT PLAN~~
~~M30.003~~	~~1373~~	~~ITS DUCT PLAN~~
~~M30.004~~	~~1374~~	~~ITS DUCT PLAN~~
~~M30.005~~	~~1375~~	~~ITS DUCT PLAN~~
~~M30.006~~	~~1376~~	~~ITS DUCT PLAN~~
~~M30.007~~	~~1377~~	~~ITS DUCT PLAN~~
~~M30.008~~	~~1378~~	~~ITS DUCT PLAN~~
~~M30.009~~	~~1379~~	~~ITS DUCT PLAN~~
~~M30.010~~	~~1380~~	~~ITS DUCT PLAN~~
~~M30.011~~	~~1381~~	~~ITS DUCT PLAN~~
~~M30.012~~	~~1382~~	~~ITS DUCT PLAN~~
~~M30.013~~	~~1383~~	~~ITS DUCT PLAN~~
~~M30.014~~	~~1384~~	~~ITS DUCT PLAN~~
~~M30.015~~	~~1385~~	~~ITS DUCT PLAN~~
~~M30.016~~	~~1386~~	~~ITS DUCT PLAN~~
~~M30.017~~	~~1387~~	~~ITS DUCT PLAN~~
~~M30.018~~	~~1388~~	~~ITS DUCT PLAN~~
~~M30.019~~	~~1389~~	~~ITS DUCT PLAN~~
~~M30.020~~	~~1390~~	~~ITS DUCT PLAN~~
~~M30.021~~	~~1391~~	~~ITS DUCT PLAN~~
~~M30.022~~	~~1392~~	~~ITS DUCT PLAN~~
~~M30.023~~	~~1393~~	~~ITS DUCT PLAN~~
~~M30.024~~	~~1394~~	~~ITS DUCT PLAN~~
~~M30.025~~	~~1395~~	~~ITS DUCT PLAN~~
~~M30.026~~	~~1396~~	~~ITS DUCT PLAN~~
~~M30.027~~	~~1397~~	~~ITS DUCT PLAN~~
~~M30.028~~	~~1398~~	~~ITS DUCT PLAN~~
~~M30.029~~	~~1399~~	~~ITS DUCT PLAN~~
~~M30.030~~	~~1400~~	~~ITS DUCT PLAN~~
~~M30.031~~	~~1401~~	~~ITS DUCT PLAN~~
~~M30.032~~	~~1402~~	~~ITS DUCT PLAN~~
~~M30.033~~	~~1403~~	~~ITS DUCT PLAN~~
~~M30.034~~	~~1404~~	~~ITS DUCT PLAN~~
~~M30.035~~	~~1405~~	~~ITS DUCT PLAN~~
~~M30.036~~	~~1406~~	~~ITS DUCT PLAN~~
~~M30.037~~	~~1407~~	~~ITS DUCT PLAN~~
~~M30.038~~	~~1408~~	~~ITS DUCT PLAN~~
~~M30.039~~	~~1409~~	~~ITS DUCT PLAN~~
~~M30.040~~	~~1410~~	~~ITS DUCT PLAN~~
~~M30.041~~	~~1411~~	~~ITS DUCT PLAN~~
~~M30.042~~	~~1412~~	~~ITS DUCT PLAN~~
~~M30.043~~	~~1413~~	~~ITS DUCT PLAN~~
~~M30.044~~	~~1414~~	~~ITS DUCT PLAN~~
~~M30.045~~	~~1415~~	~~ITS DUCT PLAN~~
~~M30.046~~	~~1416~~	~~ITS DUCT PLAN~~
~~M30.047~~	~~1417~~	~~ITS DUCT PLAN~~
~~M30.048~~	~~1418~~	~~ITS DUCT PLAN~~
~~M30.049~~	~~1419~~	~~ITS DUCT PLAN~~
~~M30.050~~	~~1420~~	~~ITS DUCT PLAN~~
~~M30.051~~	~~1421~~	~~ITS DUCT PLAN~~
~~M30.052~~	~~1422~~	~~ITS DUCT PLAN~~
~~M30.053~~	~~1423~~	~~ITS DUCT PLAN~~
~~M30.054~~	~~1424~~	~~ITS DUCT PLAN~~
~~M30.055~~	~~1425~~	~~ITS DUCT PLAN~~
~~M30.056~~	~~1426~~	~~ITS DUCT PLAN~~
~~M30.057~~	~~1427~~	~~ITS DUCT PLAN~~
~~M30.058~~	~~1428~~	~~ITS DUCT PLAN~~
~~M30.059~~	~~1429~~	~~ITS DUCT PLAN~~
~~M30.060~~	~~1430~~	~~ITS DUCT PLAN~~
~~M30.061~~	~~1431~~	~~ITS DUCT PLAN~~
~~M30.062~~	~~1432~~	~~ITS DUCT PLAN~~
~~M30.063~~	~~1433~~	~~ITS DUCT PLAN~~
~~M30.064~~	~~1434~~	~~ITS DUCT PLAN~~
~~M30.065~~	~~1435~~	~~ITS DUCT PLAN~~
P14.101	1579	MEADOW WOODS STATION PLUMBING SITE PLAN 1
P14.102	1580	MEADOW WOODS STATION PLUMBING SITE PLAN 2
P14.201	1581	MEADOW WOODS STATION PLATFORM PLUMBING PLAN 1
P14.202	1582	MEADOW WOODS STATION PLATFORM PLUMBING PLAN 2
P14.203	1583	MEADOW WOODS STATION PLUMBING DETAIL
P14.204	1584	MEADOW WOODS STATION PLUMBING DETAIL
P14.205	1585	MEADOW WOODS STATION PLUMBING DETAILS
P14.206	1586	MEADOW WOODS STATION PLUMBING DETAILS
P14.720	1587	MEADOW WOODS STATION WATER CONNECTION
P15.101	1750	OSCEOLA PARKWAY STATION PLUMBING SITE PLAN
P15.201	1751	OSCEOLA PARKWAY STATION PLATFORM PLUMBING PLAN 1
P15.202	1752	OSCEOLA PARKWAY STATION PLATFORM PLUMBING PLAN 2
P15.203	1753	OSCEOLA PARKWAY STATION PLUMBING DETAIL
P15.204	1754	OSCEOLA PARKWAY STATION PLUMBING DETAIL
P15.205	1755	OSCEOLA PARKWAY STATION PLUMBING DETAILS
P15.206	1756	OSCEOLA PARKWAY STATION PLUMBING DETAILS
P15.720	1757	OSCEOLA PARKWAY STATION WATER CONNECTION
P16.101	1854	KISSIMMEE STATION PLUMBING SITE PLAN 1
P16.102	1855	KISSIMMEE STATION PLUMBING SITE PLAN 2
P16.201	1856	KISSIMMEE STATION PLATFORM PLUMBING PLAN 1
P16.202	1857	KISSIMMEE STATION PLATFORM PLUMBING PLAN 2
P16.203	1858	KISSIMMEE STATION PLUMBING DETAIL
P16.204	1859	KISSIMMEE STATION PLUMBING DETAIL
P16.205	1860	KISSIMMEE STATION PLUMBING DETAILS
P16.206	1861	KISSIMMEE STATION PLUMBING DETAILS
P16.720	1862	KISSIMMEE STATION WATER CONNECTION
P17.101	2071	POINCIANA STATION PLUMBING SITE PLAN 1
P17.102	2072	POINCIANA STATION PLUMBING SITE PLAN 2
P17.103	2073	POINCIANA STATION PLUMBING SITE PLAN 3
P17.201	2074	POINCIANA STATION PLATFORM PLUMBING PLAN 1
P17.202	2075	POINCIANA STATION PLATFORM PLUMBING PLAN 2
P17.203	2076	POINCIANA STATION PLUMBING DETAIL
P17.204	2077	POINCIANA STATION PLUMBING DETAIL
P17.205	2078	POINCIANA STATION PLUMBING DETAILS
P17.206	2079	POINCIANA STATION PLUMBING DETAILS
P17.720	2080	POINCIANA STATION WATER CONNECTION
~~P18.007~~	~~2170~~	~~VSLMF OVERALL PLUMBING SITE PLAN~~
~~P18.007A~~	~~2171~~	~~VSLMF AREA A PLUMBING SITE PLAN~~

NOTICE: THE OFFICIAL RECORD OF THIS SHEET IS THE ELECTRONIC FILE SIGNED AND SEALED UNDER RULE 61G15-23.003, F.A.C.

REVISIONS

DATE	BY	DESCRIPTION	DATE	BY	DESCRIPTION

TRANSPORTATION
AECOM TECHNICAL SERVICES, Inc.
300 Colonial Center Pkwy, Suite 130
Lake Mary, FL. 32746
T 407.549.4200 F 407.549.4201
Certificate of Authorization No. 8115
DAVID S. BURWELL PE NO. 55853 www.aecom.com

STATE OF FLORIDA
DEPARTMENT OF TRANSPORTATION

ROAD NO.	COUNTY	FINANCIAL PROJECT ID
CFRC P2S	VARIOUS	423446-9-52-01

CENTRAL FLORIDA COMMUTER RAIL TRANSIT (CFCRT) PHASE 2 SOUTH

INDEX OF SHEETS

SHEET NO. 31

DRAWING NO.
C00.00ILL

DRAWING NO.	SHEET NO.	TITLE
~~PI8.007B~~	~~2172~~	~~VSLMF AREA B PLUMBING SITE PLAN~~
~~PI8.007C~~	~~2173~~	~~VSLMF AREA C PLUMBING SITE PLAN~~
~~PI8.007D~~	~~2174~~	~~VSLMF AREA D PLUMBING SITE PLAN~~
~~PI8.007E~~	~~2175~~	~~VSLMF AREA E PLUMBING SITE PLAN~~
~~PI8.008~~	~~2183~~	~~VSLMF PLUMBING SITE PLAN~~
~~PI8.008A~~	~~2184~~	~~VSLMF PLUMBING SITE PLAN~~
~~PI8.008B~~	~~2185~~	~~VSLMF PLUMBING SITE PLAN~~
~~PI8.008C~~	~~2186~~	~~VSLMF PLUMBING SITE PLAN~~
~~PI8.008D~~	~~2187~~	~~VSLMF PLUMBING SITE PLAN~~
~~PI8.008E~~	~~2188~~	~~VSLMF PLUMBING SITE PLAN~~
~~PI8.008F~~	~~2189~~	~~VSLMF PLUMBING SITE PLAN~~
~~PI8.008G~~	~~2190~~	~~VSLMF PLUMBING SITE PLAN~~
~~PI8.201~~	~~2176~~	~~VSLMF CREW BUILDING OVERALL PLUMBING PLAN~~
~~PI8.221~~	~~2177~~	~~VSLMF CREW BUILDING ENLARGED WATER PLUMBING PLAN~~
~~PI8.222~~	~~2178~~	~~VSLMF CREW BUILDING ENLARGED SANITARY PLUMBING PLAN~~
~~PI8.231~~	~~2179~~	~~VSLMF CREW BUILDING SANITARY & WATER RISERS~~
~~PI8.241~~	~~2180~~	~~PLUMBING SCHEDULES~~
~~PI8.242~~	~~2181~~	~~PLUMBING SCHEDULES~~
~~PI8.251~~	~~2182~~	~~PLUMBING DETAILS~~
S00.001	148	DESIGN LOADS
~~S00.002~~	~~149~~	~~DESIGN LOADS~~
S00.003	150	FOUNDATION SCHEDULES
~~S00.004~~	~~151~~	~~PRECAST LINTEL SCHEDULE~~
S00.005	152	3D VIEW - CANOPY A
S00.006	153	3D VIEW - CANOPY F
SI4.201	1564	MEADOW WOODS STATION FOUNDATION PLAN
SI4.202	1565	MEADOW WOODS STATION FOUNDATION PLAN
SI4.203	1566	MEADOW WOODS STATION SLAB IN-FILL PLAN
SI4.204	1567	MEADOW WOODS STATION SLAB IN-FILL PLAN
SI4.205	1568	MEADOW WOODS STATION FRAMING PLAN
SI4.206	1569	MEADOW WOODS STATION FRAMING PLAN
SI5.201	1736	OSCEOLA PARKWAY PLATFORM FOUNDATION PLAN
SI5.202	1737	OSCEOLA PARKWAY PLATFORM FOUNDATION PLAN
SI5.203	1738	OSCEOLA PARKWAY STATION SLAB IN-FILL PLAN
SI5.204	1739	OSCEOLA PARKWAY STATION SLAB IN-FILL PLAN
SI5.205	1740	OSCEOLA PARKWAY STATION FRAMING PLAN
SI5.206	1741	OSCEOLA PARKWAY STATION FRAMING PLAN
SI6.201	1840	KISSIMMEE STATION FOUNDATION PLAN
SI6.202	1841	KISSIMMEE STATION FOUNDATION PLAN
SI6.203	1842	KISSIMMEE STATION SLAB IN-FILL PLAN
SI6.204	1843	KISSIMMEE STATION SLAB IN-FILL PLAN
SI6.205	1844	KISSIMMEE STATION FRAMING PLAN
SI6.206	1845	KISSIMMEE STATION FRAMING PLAN
SI6.207	1846	KISSIMMEE STATION FRAMING PLAN
SI6.208	1847	KISSIMMEE STATION FRAMING PLAN
SI7.201	2051	POINCIANA STATION FOUNDATION PLAN
SI7.202	2052	POINCIANA STATION FOUNDATION PLAN
SI7.203	2053	POINCIANA STATION SLAB IN-FILL PLAN
SI7.204	2054	POINCIANA STATION SLAB IN-FILL PLAN
SI7.205	2055	POINCIANA STATION FRAMING PLAN
SI7.206	2056	POINCIANA STATION FRAMING PLAN
~~SI8.201~~	~~2156~~	~~CREW BUILDING FOUNDATION PLAN~~
~~SI8.202~~	~~2157~~	~~CREW BUILDING FRAMING PLAN~~
S20.401	154	ENLARGED PLANS
S20.402	155	ENLARGED PLANS
S20.403	156	ENLARGED PLANS
S20.404	157	ENLARGED PLANS
S20.405	158	ENLARGED PLANS
S20.406	159	ENLARGED PLANS
S20.407	160	ENLARGED PLANS
S20.408	161	ENLARGED PLANS
S20.409	162	ENLARGED PLANS
S20.601	163	OVERALL SECTIONS
S20.602	164	OVERALL SECTIONS
S20.603	165	OVERALL SECTIONS
S20.604	166	OVERALL SECTIONS
S20.605	167	OVERALL SECTIONS
S20.606	168	OVERALL SECTIONS
S20.607	169	OVERALL SECTIONS
S20.608	170	OVERALL SECTIONS
S20.609	171	OVERALL SECTIONS
S20.610	172	OVERALL SECTIONS
S20.611	173	OVERALL SECTIONS
S20.612	174	OVERALL SECTIONS
S20.613	175	OVERALL SECTIONS
S20.614	176	OVERALL SECTIONS
S20.615	177	OVERALL SECTIONS
S20.616	178	OVERALL SECTIONS
S20.617	179	OVERALL SECTIONS
S20.618	180	OVERALL SECTIONS
~~S20.619~~	~~181~~	~~OVERALL SECTIONS~~
~~S20.620~~	~~182~~	~~OVERALL SECTIONS~~
S20.701	183	SECTIONS AND DETAILS
S20.702	184	SECTIONS AND DETAILS
S20.703	185	SECTIONS AND DETAILS
S20.704	186	SECTIONS AND DETAILS
S20.705	187	SECTIONS AND DETAILS
S20.706	188	SECTIONS AND DETAILS
S20.707	189	SECTIONS AND DETAILS
S20.708	190	SECTIONS AND DETAILS
S20.709	191	SECTIONS AND DETAILS
S20.710	192	SECTIONS AND DETAILS
S20.711	193	SECTIONS AND DETAILS
S20.712	194	SECTIONS AND DETAILS
~~S20.713~~	~~195~~	~~SECTIONS AND DETAILS~~
~~S20.714~~	~~196~~	~~SECTIONS AND DETAILS~~
~~S20.715~~	~~197~~	~~SECTIONS AND DETAILS~~
~~S20.716~~	~~198~~	~~SECTIONS AND DETAILS~~
~~T00.001~~	~~64~~	~~TRACK GENERAL NOTES~~
~~T00.002~~	~~293~~	~~PROJECT LAYOUT~~
~~T00.003~~	~~294~~	~~PROJECT LAYOUT~~
~~T00.004~~	~~295~~	~~PROJECT LAYOUT~~
~~T00.005~~	~~296~~	~~PROJECT LAYOUT~~
~~T00.006~~	~~297~~	~~PROJECT LAYOUT~~
~~T00.007~~	~~298~~	~~PROJECT LAYOUT~~
~~T00.008~~	~~299~~	~~PROJECT LAYOUT~~
~~T00.009~~	~~66~~	~~TYPICAL SECTIONS~~
~~T00.009~~	~~300~~	~~TRACK CHARTS~~
~~T00.010~~	~~67~~	~~TYPICAL SECTIONS~~
~~T00.010~~	~~301~~	~~TRACK CHARTS~~
~~T00.011~~	~~68~~	~~TYPICAL SECTIONS~~
~~T00.011~~	~~302~~	~~TRACK CHARTS~~
~~T00.012~~	~~69~~	~~TYPICAL SECTIONS~~
~~T00.012~~	~~303~~	~~TRACK CHARTS~~
~~T00.013~~	~~70~~	~~TYPICAL SECTIONS~~
~~T00.013~~	~~304~~	~~TRACK CHARTS~~

NOTICE: THE OFFICIAL RECORD OF THIS SHEET IS THE ELECTRONIC FILE SIGNED AND SEALED UNDER RULE 61G15-23.003, F.A.C.

REVISIONS

DATE	BY	DESCRIPTION	DATE	BY	DESCRIPTION

TRANSPORTATION
AECOM TECHNICAL SERVICES, Inc.
300 Colonial Center Pkwy, Suite 130
Lake Mary, FL. 32746
T 407.549.4200 F 407.549.4201
Certificate of Authorization No. 8115
DAVID S. BURWELL PE NO. 55853 www.aecom.com

STATE OF FLORIDA
DEPARTMENT OF TRANSPORTATION

ROAD NO.	COUNTY	FINANCIAL PROJECT ID
CFRC P2S	VARIOUS	423446-9-52-01

CENTRAL FLORIDA COMMUTER RAIL TRANSIT (CFCRT) PHASE 2 SOUTH

INDEX OF SHEETS

SHEET NO.
32

DRAWING NO.	SHEET NO.	TITLE
T00.0I4	7I	TYPICAL SECTIONS
T00.0I4	305	TRACK CHARTS
T00.0I5	72	TYPICAL SECTIONS VSLMF
T00.0I6	73	TRACK DRIP PAN DETAILS
T30.020I	306	CURVE DATA TABLE
T30.0202	307	CURVE DATA TABLE
T30.0203	308	CURVE DATA TABLE
T30.0204	309	CURVE DATA TABLE
T30.0204A	3I0	CURVE DATA TABLE
T30.0204B	3II	TURNOUT/CROSSOVER DATA TABLE
T30.0205	3I2	PLAN AND PROFILE
T30.0206	3I3	PLAN AND PROFILE
T30.0207	3I4	PLAN AND PROFILE
T30.0208	3I5	PLAN AND PROFILE
T30.0209	3I6	PLAN AND PROFILE
T30.02I0	3I7	PLAN AND PROFILE
T30.02II	3I8	PLAN AND PROFILE
T30.02I2	3I9	PLAN AND PROFILE
T30.02I3	320	PLAN AND PROFILE
T30.02I4	32I	PLAN AND PROFILE
T30.02I5	322	PLAN AND PROFILE
T30.02I6	323	PLAN AND PROFILE
T30.02I7	324	PLAN AND PROFILE
T30.02I8	325	PLAN AND PROFILE
T30.02I9	326	PLAN AND PROFILE
T30.0220	327	PLAN AND PROFILE
T30.022I	328	PLAN AND PROFILE
T30.0222	329	PLAN AND PROFILE
T30.0223	330	PLAN AND PROFILE
T30.0224	33I	PLAN AND PROFILE
T30.0225	332	PLAN AND PROFILE
T30.0226	333	PLAN AND PROFILE
T30.0227	334	PLAN AND PROFILE
T30.0228	335	PLAN AND PROFILE
T30.0229	336	PLAN AND PROFILE
T30.0230	337	PLAN AND PROFILE
T30.023I	338	PLAN AND PROFILE
T30.0232	339	PLAN AND PROFILE
T30.0233	340	PLAN AND PROFILE
T30.0234	34I	PLAN AND PROFILE
T30.0235	342	PLAN AND PROFILE
T30.0236	343	PLAN AND PROFILE
T30.0237	344	PLAN AND PROFILE
T30.0238	345	PLAN AND PROFILE
T30.0239	346	PLAN AND PROFILE
T30.0240	347	PLAN AND PROFILE
T30.024I	348	PLAN AND PROFILE
T30.0242	349	PLAN AND PROFILE
T30.0243	350	PLAN AND PROFILE
T30.0244	35I	PLAN AND PROFILE
T30.0245	352	PLAN AND PROFILE
T30.0246	353	PLAN AND PROFILE
T30.0247	354	PLAN AND PROFILE
T30.0248	355	PLAN AND PROFILE
T30.0249	356	PLAN AND PROFILE
T30.0250	357	PLAN AND PROFILE
T30.025I	358	PLAN AND PROFILE
T30.0252	359	PLAN AND PROFILE
T30.0253	360	PLAN AND PROFILE
T30.0254	36I	PLAN AND PROFILE
T30.0255	362	PLAN AND PROFILE
T30.0256	363	PLAN AND PROFILE
T30.0257	364	PLAN AND PROFILE
T30.0258	365	PLAN AND PROFILE
T30.0259	366	PLAN AND PROFILE
T30.0260	367	PLAN AND PROFILE
T30.026I	368	PLAN AND PROFILE
T30.0262	369	PLAN AND PROFILE
T30.0263	370	PLAN AND PROFILE
T30.0264	37I	PLAN AND PROFILE
T30.0265	372	PLAN AND PROFILE
T30.0266	373	PLAN AND PROFILE
T30.0267	374	PLAN AND PROFILE
T30.0268	375	PLAN AND PROFILE
T30.0269	376	PLAN AND PROFILE
T30.040IA	442	MP 797.70 LANDSTREET RD GRADE CROSSING DETAIL
T30.040IB	443	MP 797.70 LANDSTREET RD GRADE CROSSING PROFILE
T30.040IC	444	MP 797.70 LANDSTREET RD ROADWAY CROSS SECTION
T30.040ID	446	MP 797.70 LANDSTREET RD TRAFFIC CONTROL PLAN
T30.0402A	447	MP 797.94 PINE ST TYPICAL SECTION
T30.0402B	448	MP 797.94 PINE ST GRADE CROSSING DETAIL
T30.0402C	449	MP 797.94 PINE ST GRADE CROSSING PROFILE
T30.0402D	450	MP 797.94 PINE ST ROADWAY CROSS SECTIONS
T30.0402E	45I	MP 797.94 PINE ST ROADWAY CROSS SECTIONS
T30.0402F	453	MP 797.94 PINE ST SIGNING AND MARKING PLAN
T30.0402G	454	MP 797.94 PINE ST TRAFFIC CONTROL PLAN
T30.0403A	455	MP 798.24 4TH ST TYPICAL SECTION
T30.0403B	456	MP 798.24 4TH ST GRADE CROSSING DETAIL
T30.0403C	457	MP 798.24 4TH ST GRADE CROSSING PROFILE
T30.0403D	458	MP 798.24 4TH ST ROADWAY CROSS SECTION
T30.0403E	460	MP798.24 4TH ST SIGNING AND MARKING PLAN
T30.0403F	46I	MP 798.24 4TH ST TRAFFIC CONTROL PLAN
T30.0404A	462	MP 798.75 TAFT VINELAND RD GRADE CROSSING DETAIL
T30.0404B	463	MP 798.75 TAFT VINELAND RD GRADE CROSSING PROFILE
T30.0404C	464	MP 798.75 TAFT VINELAND RD ROADWAY CROSS SECTION
T30.0404D	465	MP 798.75 TAFT VINELAND RD ROADWAY CROSS SECTION
T30.0404E	466	MP 798.75 TAFT VINELAND RD ROADWAY CROSS SECTION
T30.0404F	468	MP 798.75 TAFT VINELAND RD TRAFFIC CONTROL PLAN
T30.0405A	469	MP 800.77 WETHERBEE RD TYPICAL SECTION
T30.0405B	470	MP 800.77 WETHERBEE RD TYPICAL SECTION
T30.0405C	47I	MP 800.77 WETHERBEE RD GRADE CROSSING DETAIL
T30.0405D	472	MP 800.77 WETHERBEE RD GRADE CROSSING PROFILE
T30.0405E	473	MP 800.77 WETHERBEE RD ROADWAY CROSS SECTION
T30.0405F	474	MP 800.77 WETHERBEE RD ROADWAY CROSS SECTION
T30.0405G	475	MP 800.77 WETHERBEE RD ROADWAY CROSS SECTION
T30.0405H	477	MP 800.77 WETHERBEE RD SIGNING AND MARKING PLAN
T30.0405I	478	MP 800.77 WETHERBEE RD TRAFFIC CONTROL PLAN
T30.0405J	479	MP 800.77 WETHERBEE RD TRAFFIC CONTROL PLAN
T30.0406A	480	MP 80I.I5 FAIRWAY WOODS TYPICAL SECTION
T30.0406B	48I	MP 80I.I5 FAIRWAY WOODS GRADE CROSSING DETAIL
T30.0406C	482	MP 80I.I5 FAIRWAY WOODS GRADE CROSSING PROFILE
T30.0406D	483	MP 80I.I5 FAIRWAY WOODS ROADWAY CROSS SECTION
T30.0406E	484	MP 80I.I5 FAIRWAY WOODS ROADWAY CROSS SECTION
T30.0406F	486	MP 80I.I5 FAIRWAY WOODS SIGNING AND MARKING PLAN
T30.0406G	487	MP 80I.I5 FAIRWAY WOODS TRAFFIC CONTROL PLAN
T30.0407A	488	MP 805.08 GARDEN ST TYPICAL SECTION

NOTICE: THE OFFICIAL RECORD OF THIS SHEET IS THE ELECTRONIC FILE SIGNED AND SEALED UNDER RULE 6GI5-23.003, F.A.C.

REVISIONS

DATE	BY	DESCRIPTION	DATE	BY	DESCRIPTION

TRANSPORTATION
AECOM TECHNICAL SERVICES, Inc.
300 Colonial Center Pkwy, Suite 130
Lake Mary, FL. 32746
T 407.549.4200 F 407.549.4201
Certificate of Authorization No. 8115
DAVID S. BURWELL PE NO. 55853 www.aecom.com

STATE OF FLORIDA
DEPARTMENT OF TRANSPORTATION

ROAD NO.	COUNTY	FINANCIAL PROJECT ID
CFRC P2S	VARIOUS	423446-9-52-0I

CENTRAL FLORIDA COMMUTER RAIL TRANSIT (CFCRT) PHASE 2 SOUTH

INDEX OF SHEETS

SHEET NO. 33

DRAWING NO.
C00.00INN

DRAWING NO.	SHEET NO.	TITLE
T30.0407B	489	MP 805.08 GARDEN ST GRADE CROSSING DETAIL
T30.0407C	490	MP 805.08 GARDEN ST GRADE CROSSING PROFILE
T30.0407D	491	MP 805.08 GARDEN ST ROADWAY CROSS SECTION
T30.0407E	492	MP 805.08 GARDEN ST ROADWAY CROSS SECTION
T30.0407F	494	MP 805.08 GARDEN ST SIGNING AND MARKING PLAN
T30.0407G	495	MP 805.08 GARDEN ST TRAFFIC CONTROL PLAN
T30.0408A	496	MP 805.70 CARROLL ST TYPICAL SECTION
T30.0408B	497	MP 805.70 CARROLL ST GRADE CROSSING DETAIL
T30.0408C	498	MP 805.70 CARROLL ST GRADE CROSSING PROFILE
T30.0408D	499	MP 805.70 CARROLL ST ROADWAY CROSS SECTION
T30.0408E	500	MP 805.70 CARROLL ST ROADWAY CROSS SECTION
T30.0408F	502	MP 805.70 CARROLL ST SIGNING AND MARKING PLAN
T30.0408G	503	MP 805.70 CARROLL ST TRAFFIC CONTROL PLAN
T30.0409A	504	MP 806.22 E DONEGAN AVE TYPICAL SECTION
T30.0409B	505	MP 806.22 E DONEGAN AVE GRADE CROSSING DETAIL
T30.0409C	506	MP 806.22 E DONEGAN AVE GRADE CROSSING PROFILE
T30.0409D	507	MP 806.22 E DONEGAN AVE ROADWAY CROSS SECTION
T30.0409E	509	MP 806.22 E DONEGAN AVE SIGNING AND MARKING PLAN
T30.0409F	510	MP 806.22 E DONEGAN AVE TRAFFIC CONTROL PLAN
T30.0410A	511	MP 807.23 SR 500 TYPICAL SECTION
T30.0410B	512	MP 807.23 SR 500 GRADE CROSSING DETAIL
T30.0410C	513	MP 807.23 SR 500 GRADE CROSSING PROFILE
T30.0410D	514	MP 807.23 SR 500 ROADWAY CROSS SECTION
T30.0410E	515	MP 807.23 SR 500 ROADWAY CROSS SECTION
T30.0410F	517	MP 807.23 SR 500 SIGNING AND MARKING PLAN
T30.0410G	518	MP 807.23 SR 500 TRAFFIC CONTROL PLAN
T30.0410H	519	MP 807.23 SR 500 TRAFFIC CONTROL PLAN
T30.0411A	520	MP 807.43 E MAGNOLIA ST TYPICAL SECTION
T30.0411B	521	MP 807.43 E MAGNOLIA ST GRADE CROSSING DETAIL
T30.0411C	522	MP 807.43 E MAGNOLIA ST GRADE CROSSING PROFILE
T30.0411D	523	MP 807.43 E MAGNOLIA ST ROADWAY CROSS SECTION
T30.0411E	524	MP 807.43 E MAGNOLIA ST ROADWAY CROSS SECTION
T30.0411F	526	MP 807.43 E MAGNOLIA ST SIGNING AND MARKING PLAN
T30.0411G	527	MP 807.43 E MAGNOLIA ST TRAFFIC CONTROL PLAN
T30.0412A	528	MP 807.55 OAK ST TYPICAL SECTION
T30.0412B	529	MP 807.55 OAK ST GRADE CROSSING DETAIL
T30.0412C	530	MP 807.55 OAK ST GRADE CROSSING PROFILE
T30.0412D	531	MP 807.55 OAK ST ROADWAY CROSS SECTION
T30.0412E	532	MP 807.55 OAK ST ROADWAY CROSS SECTION
T30.0412F	533	MP 807.55 OAK ST ROADWAY CROSS SECTION
T30.0412G	534	MP 807.55 OAK ST ROADWAY CROSS SECTION
T30.0412H	536	MP 807.55 OAK ST SIGNING AND MARKING PLAN
T30.0412I	537	MP 807.55 OAK ST TRAFFIC CONTROL PLAN
T30.0413A	538	MP 807.70 PARK ST TYPICAL SECTION
T30.0413B	539	MP 807.70 PARK ST GRADE CROSSING DETAIL
T30.0413C	540	MP 807.70 PARK ST GRADE CROSSING PROFILE
T30.0413D	541	MP 807.70 PARK ST ROADWAY CROSS SECTION
T30.0413E	542	MP 807.70 PARK ST ROADWAY CROSS SECTION
T30.0413F	543	MP 807.70 PARK ST ROADWAY CROSS SECTION
T30.0413G	544	MP 807.70 PARK ST ROADWAY CROSS SECTION
T30.0413H	545	MP 807.70 PARK ST ROADWAY CROSS SECTION
T30.0413I	546	MP 807.70 PARK ST ROADWAY CROSS SECTION
T30.0413J	548	MP 807.70 PARK ST SIGNING AND MARKING PLAN
T30.0413K	549	MP 807.70 PARK ST TRAFFIC CONTROL PLAN
T30.0414A	550	MP 807.94 E. DRURY AVE TYPICAL SECTION
T30.0414B	551	MP 807.94 E. DRURY AVE GRADE CROSSING DETAIL
T30.0414C	552	MP 807.94 E. DRURY AVE GRADE CROSSING PROFILE
T30.0414D	553	MP 807.94 E. DRURY AVE ROADWAY CROSS SECTION
T30.0414E	554	MP 807.94 E. DRURY AVE ROADWAY CROSS SECTION
T30.0414F	555	MP 807.94 E. DRURY AVE ROADWAY CROSS SECTION
T30.0414G	556	MP 807.94 E. DRURY AVE ROADWAY CROSS SECTION
T30.0414H	558	MP 807.94 E. DRURY AVE SIGNING AND MARKING PLAN
T30.0414I	559	MP 807.94 E. DRURY AVE TRAFFIC CONTROL PLAN
T30.0415A	560	MP 808.07 E DAKIN AVE TYPICAL SECTION
T30.0415B	561	MP 808.07 E DAKIN AVE GRADE CROSSING DETAIL
T30.0415C	562	MP 808.07 E DAKIN AVE GRADE CROSSING PROFILE
T30.0415D	563	MP 808.07 E DAKIN AVE ROADWAY CROSS SECTION
T30.0415E	564	MP 808.07 E DAKIN AVE ROADWAY CROSS SECTION
T30.0415F	566	MP 808.07 E DAKIN AVE SIGNING AND MARKING PLAN
T30.0415G	567	MP 808.07 E DAKIN AVE TRAFFIC CONTROL PLAN
T30.0416A	568	MP 808.15 E MONUMENT AVE TYPICAL SECTION
T30.0416B	569	MP 808.15 E MONUMENT AVE GRADE CROSSING DETAIL
T30.0416C	570	MP 808.15 E MONUMENT AVE GRADE CROSSING PROFILE
T30.0416D	571	MP 808.15 E MONUMENT AVE ROADWAY CROSS SECTION
T30.0416E	572	MP 808.15 E MONUMENT AVE ROADWAY CROSS SECTION
T30.0416F	574	MP 808.15 E MONUMENT AVE SIGNING AND MARKING PLAN
T30.0416G	575	MP 808.15 E MONUMENT AVE TRAFFIC CONTROL PLAN
T30.0417A	576	MP 808.22 MEMORIAL WALKWAY DEMOLITION PLAN
T30.0418A	577	MP 808.28 RUBY AVE TYPICAL SECTION
T30.0418B	578	MP 808.28 RUBY AVE GRADE CROSSING DETAIL
T30.0418C	579	MP 808.28 RUBY AVE GRADE CROSSING PROFILE
T30.0418D	580	MP 808.28 RUBY AVE ROADWAY CROSS SECTION
T30.0418E	581	MP 808.28 RUBY AVE ROADWAY CROSS SECTION
T30.0418F	582	MP 808.28 RUBY AVE ROADWAY CROSS SECTION
T30.0418G	584	MP 808.28 RUBY AVE SIGNING AND MARKING PLAN
T30.0418H	585	MP 808.28 RUBY AVE TRAFFIC CONTROL PLAN
T30.0419A	586	MP 808.52 BEAUMONT AVE TYPICAL SECTION
T30.0419B	587	MP 808.52 BEAUMONT AVE GRADE CROSSING DETAIL
T30.0419C	588	MP 808.52 BEAUMONT AVE GRADE CROSSING PROFILE
T30.0419D	590	MP 808.52 BEAUMONT AVE SIGNING AND MARKING PLAN
T30.0420A	591	MP 808.61 VERNON RD DEMOLITION PLAN
T30.0421A	592	MP 808.77 LAKESHORE BLVD DEMOLITION PLAN
T30.0422A	593	MP 808.77 CLYDE AVE TYPICAL SECTION
T30.0422B	594	MP 808.77 CLYDE AVE GRADE CROSSING DETAIL
T30.0422C	595	MP 808.77 CLYDE AVE GRADE CROSSING PROFILE
T30.0422D	596	MP 808.77 CLYDE AVE ROADWAY CROSS SECTIONS
T30.0422E	597	MP 808.77 CLYDE AVE ROADWAY CROSS SECTIONS
T30.0422H	599	MP 808.77 CLYDE AVE SIGNING AND MARKING PLAN
T30.0422I	600	MP 808.77 CLYDE AVE TRAFFIC CONTROL PLAN
T30.0423A	601	MP 810.45 CR 531 TYPICAL SECTION
T30.0423B	602	MP 810.45 CR 531 GRADE CROSSING DETAIL
T30.0423C	603	MP 810.45 CR 531 GRADE CROSSING PROFILE
T30.0423D	604	MP 810.45 CR 531 ROADWAY CROSS SECTION
T30.0423E	605	MP 810.45 CR 531 ROADWAY CROSS SECTION
T30.0423F	606	MP 810.45 CR 531 ROADWAY CROSS SECTION
T30.0423G	608	MP 810.45 CR 531 SIGNING AND MARKING PLAN
T30.0423H	609	MP 810.45 CR 531 TRAFFIC CONTROL PLAN
T30.0424A	610	MP 812.16 CRESTRIDGE DR TYPICAL SECTION
T30.0424B	611	MP 812.16 CRESTRIDGE DR GRADE CROSSING DETAIL
T30.0424C	612	MP 812.16 CRESTRIDGE DR GRADE CROSSING PROFILE
T30.0424D	613	MP 812.16 CRESTRIDGE DR ROADWAY CROSS SECTION
T30.0424E	615	MP 812.16 CRESTRIDGE SIGNING AND MARKING PLAN
T30.0424F	616	MP 812.16 CRESTRIDGE TRAFFIC CONTROL PLAN
T30.0425A	617	MP 813.77 POINCIANA BLVD GRADE CROSSING DETAIL
T30.0701	1168	UTILITY ADJUSTMENTS
T30.0702	1169	UTILITY ADJUSTMENTS

NOTICE: THE OFFICIAL RECORD OF THIS SHEET IS THE ELECTRONIC FILE SIGNED AND SEALED UNDER RULE 61G15-23.003, F.A.C.

REVISIONS					
DATE	BY	DESCRIPTION	DATE	BY	DESCRIPTION

TRANSPORTATION
AECOM TECHNICAL SERVICES, Inc.
300 Colonial Center Pkwy, Suite 130
Lake Mary, FL. 32746
T 407.549.4200 F 407.549.4201
Certificate of Authorization No. 8115
DAVID S. BURWELL PE NO. 55853 www.aecom.com

STATE OF FLORIDA
DEPARTMENT OF TRANSPORTATION

ROAD NO.	COUNTY	FINANCIAL PROJECT ID
CFRC P2S	VARIOUS	423446-9-52-01

CENTRAL FLORIDA COMMUTER RAIL TRANSIT (CFCRT) PHASE 2 SOUTH

INDEX OF SHEETS

SHEET NO. 34

DRAWING NO.	SHEET NO.	TITLE
T30.0703	1170	UTILITY ADJUSTMENTS
T30.0704	1171	UTILITY ADJUSTMENTS
T30.0705	1172	UTILITY ADJUSTMENTS
T30.0706	1173	UTILITY ADJUSTMENTS
T30.0707	1174	UTILITY ADJUSTMENTS
T30.0708	1175	UTILITY ADJUSTMENTS
T30.0709	1176	UTILITY ADJUSTMENTS
T30.0710	1177	UTILITY ADJUSTMENTS
T30.0711	1178	UTILITY ADJUSTMENTS
T30.0712	1179	UTILITY ADJUSTMENTS
T30.0713	1180	UTILITY ADJUSTMENTS
T30.0714	1181	UTILITY ADJUSTMENTS
T30.0715	1182	UTILITY ADJUSTMENTS
T30.0716	1183	UTILITY ADJUSTMENTS
T30.0717	1184	UTILITY ADJUSTMENTS
T30.0718	1185	UTILITY ADJUSTMENTS
T30.0719	1186	UTILITY ADJUSTMENTS
T30.0720	1187	UTILITY ADJUSTMENTS
T30.0721	1188	UTILITY ADJUSTMENTS
T30.0722	1189	UTILITY ADJUSTMENTS
T30.0723	1190	UTILITY ADJUSTMENTS
T30.0724	1191	UTILITY ADJUSTMENTS
T30.0725	1192	UTILITY ADJUSTMENTS
T30.0726	1193	UTILITY ADJUSTMENTS
T30.0727	1194	UTILITY ADJUSTMENTS
T30.0728	1195	UTILITY ADJUSTMENTS
T30.0729	1196	UTILITY ADJUSTMENTS
T30.0730	1197	UTILITY ADJUSTMENTS
T30.0731	1198	UTILITY ADJUSTMENTS
T30.0732	1199	UTILITY ADJUSTMENTS
T30.0733	1200	UTILITY ADJUSTMENTS
T30.0734	1201	UTILITY ADJUSTMENTS
T30.0735	1202	UTILITY ADJUSTMENTS
T30.0736	1203	UTILITY ADJUSTMENTS
T30.0737	1204	UTILITY ADJUSTMENTS
T30.0738	1205	UTILITY ADJUSTMENTS
T30.0739	1206	UTILITY ADJUSTMENTS
T30.0740	1207	UTILITY ADJUSTMENTS
T30.0741	1208	UTILITY ADJUSTMENTS
T30.0742	1209	UTILITY ADJUSTMENTS
T30.0743	1210	UTILITY ADJUSTMENTS
T30.0744	1211	UTILITY ADJUSTMENTS
T30.0745	1212	UTILITY ADJUSTMENTS
T30.0746	1213	UTILITY ADJUSTMENTS
T30.0747	1214	UTILITY ADJUSTMENTS
T30.0748	1215	UTILITY ADJUSTMENTS
T30.0749	1216	UTILITY ADJUSTMENTS
T30.0750	1217	UTILITY ADJUSTMENTS
T30.0751	1218	UTILITY ADJUSTMENTS
T30.0752	1219	UTILITY ADJUSTMENTS
T30.0753	1220	UTILITY ADJUSTMENTS
T30.0754	1221	UTILITY ADJUSTMENTS
T30.0755	1222	UTILITY ADJUSTMENTS
T30.0756	1223	UTILITY ADJUSTMENTS
T30.0757	1224	UTILITY ADJUSTMENTS
T30.0758	1225	UTILITY ADJUSTMENTS
T30.0759	1226	UTILITY ADJUSTMENTS
T30.0760	1227	UTILITY ADJUSTMENTS
T30.0761	1228	UTILITY ADJUSTMENTS
T30.0762	1229	UTILITY ADJUSTMENTS
T30.0763	1230	UTILITY ADJUSTMENTS
T30.0764	1231	UTILITY ADJUSTMENTS
T30.0765	1232	UTILITY ADJUSTMENTS
T30.0766	445	MP 797.70 LANDSTREET RD UTILITY ADJUSTMENTS
T30.0767	452	MP 797.94 PINE ST UTILITY ADJUSTMENTS
T30.0768	459	MP 798.24 4TH ST UTILITY ADJUSTMENTS
T30.0769	467	MP 798.75 TAFT VINELAND RD UTILITY ADJUSTMENTS
T30.0770	476	MP 800.77 WETHERBEE RD UTILITY ADJUSTMENTS
T30.0771	485	MP 801.15 FAIRWAY WOODS UTILITY ADJUSTMENTS
T30.0772	493	MP 805.08 GARDEN ST UTILITY ADJUSTMENTS
T30.0773	501	MP 805.70 CARROLL ST GRADE UTILITY ADJUSTMENT
T30.0774	508	MP 806.22 E DONEGAN AVE UTILITY ADJUSTMENTS
T30.0775	516	MP 807.23 SR 500 ROADWAY UTILITY ADJUSTMENTS
T30.0776	525	MP 807.43 E MAGNOLIA ST UTILITY ADJUSTMENTS
T30.0777	535	MP 807.55 OAK ST UTILITY ADJUSTMENTS
T30.0778	547	MP 807.70 PARK ST UTILITY ADJUSTMENTS
T30.0779	557	MP 807.94 E. DRURY AVE UTILITY ADJUSTMENTS
T30.0780	565	MP 808.07 E OAKIN AVE UTILITY ADJUSTMENTS
T30.0781	573	MP 808.15 E MONUMENT AVE UTILITY ADJUSTMENTS
T30.0782	583	MP 808.28 RUBY AVE UTILITY ADJUSTMENTS
T30.0783	598	MP 808.77 CLYDE AVE UTILITY ADJUSTMENTS
T30.0784	589	MP 808 BEAUMONT AVE UTILITY ADJUSTMENTS
T30.0785	607	MP 810.45 CR 531UTILITY ADJUSTMENTS
T30.0786	614	MP 812.16 CRESTRIDGE DR UTILITY ADJUSTMENTS
T30.0787	618	MP 813.77 POINCIANA BLVD UTILITY ADJUSTMENTS
T30.6001	620	CROSS SECTIONS
T30.6002	621	CROSS SECTIONS
T30.6003	622	CROSS SECTIONS
T30.6004	623	CROSS SECTIONS
T30.6005	624	CROSS SECTIONS
T30.6006	625	CROSS SECTIONS
T30.6007	626	CROSS SECTIONS
T30.6008	627	CROSS SECTIONS
T30.6009	628	CROSS SECTIONS
T30.6010	629	CROSS SECTIONS
T30.6011	630	CROSS SECTIONS
T30.6012	631	CROSS SECTIONS
T30.6013	632	CROSS SECTIONS
T30.6014	633	CROSS SECTIONS
T30.6015	634	CROSS SECTIONS
T30.6016	635	CROSS SECTIONS
T30.6017	636	CROSS SECTIONS
T30.6018	637	CROSS SECTIONS
T30.6019	638	CROSS SECTIONS
T30.6020	639	CROSS SECTIONS
T30.6021	640	CROSS SECTIONS
T30.6022	641	CROSS SECTIONS
T30.6023	642	CROSS SECTIONS
T30.6024	643	CROSS SECTIONS
T30.6025	644	CROSS SECTIONS
T30.6026	645	CROSS SECTIONS
T30.6027	646	CROSS SECTIONS
T30.6028	647	CROSS SECTIONS
T30.6029	648	CROSS SECTIONS
T30.6030	649	CROSS SECTIONS
T30.6031	650	CROSS SECTIONS

NOTICE: THE OFFICIAL RECORD OF THIS SHEET IS THE ELECTRONIC FILE SIGNED AND SEALED UNDER RULE 61G15-23.003, F.A.C.

REVISIONS					
DATE	BY	DESCRIPTION	DATE	BY	DESCRIPTION

TRANSPORTATION
AECOM TECHNICAL SERVICES, Inc.
300 Colonial Center Pkwy, Suite 130
Lake Mary, FL. 32746
T 407.549.4200 F 407.549.4201
Certificate of Authorization No. 8115
DAVID S. BURWELL PE NO. 55853 www.aecom.com

STATE OF FLORIDA
DEPARTMENT OF TRANSPORTATION

ROAD NO.	COUNTY	FINANCIAL PROJECT ID
CFRC P2S	VARIOUS	423446-9-52-01

CENTRAL FLORIDA COMMUTER RAIL TRANSIT (CFCRT) PHASE 2 SOUTH

INDEX OF SHEETS

SHEET NO. 35

DRAWING NO.	SHEET NO.	TITLE
T30.6032	651	CROSS SECTIONS
T30.6033	652	CROSS SECTIONS
T30.6034	653	CROSS SECTIONS
T30.6035	654	CROSS SECTIONS
T30.6036	655	CROSS SECTIONS
T30.6037	656	CROSS SECTIONS
T30.6038	657	CROSS SECTIONS
T30.6039	658	CROSS SECTIONS
T30.6040	659	CROSS SECTIONS
T30.6041	660	CROSS SECTIONS
T30.6042	661	CROSS SECTIONS
T30.6043	662	CROSS SECTIONS
T30.6044	663	CROSS SECTIONS
T30.6045	664	CROSS SECTIONS
T30.6046	665	CROSS SECTIONS
T30.6047	666	CROSS SECTIONS
T30.6048	667	CROSS SECTIONS
T30.6049	668	CROSS SECTIONS
T30.6050	669	CROSS SECTIONS
T30.6051	670	CROSS SECTIONS
T30.6052	671	CROSS SECTIONS
T30.6053	672	CROSS SECTIONS
T30.6054	673	CROSS SECTIONS
T30.6055	674	CROSS SECTIONS
T30.6056	675	CROSS SECTIONS
T30.6057	676	CROSS SECTIONS
T30.6058	677	CROSS SECTIONS
T30.6059	678	CROSS SECTIONS
T30.6060	679	CROSS SECTIONS
T30.6061	680	CROSS SECTIONS
T30.6062	681	CROSS SECTIONS
T30.6063	682	CROSS SECTIONS
T30.6064	683	CROSS SECTIONS
T30.6065	684	CROSS SECTIONS
T30.6066	685	CROSS SECTIONS
T30.6067	686	CROSS SECTIONS
T30.6068	687	CROSS SECTIONS
T30.6069	688	CROSS SECTIONS
T30.6070	689	CROSS SECTIONS
T30.6071	690	CROSS SECTIONS
T30.6072	691	CROSS SECTIONS
T30.6073	692	CROSS SECTIONS
T30.6074	693	CROSS SECTIONS
T30.6075	694	CROSS SECTIONS
T30.6076	695	CROSS SECTIONS
T30.6077	696	CROSS SECTIONS
T30.6078	697	CROSS SECTIONS
T30.6079	698	CROSS SECTIONS
T30.6080	699	CROSS SECTIONS
T30.6081	700	CROSS SECTIONS
T30.6082	701	CROSS SECTIONS
T30.6083	702	CROSS SECTIONS
T30.6084	703	CROSS SECTIONS
T30.6085	704	CROSS SECTIONS
T30.6086	705	CROSS SECTIONS
T30.6087	706	CROSS SECTIONS
T30.6088	707	CROSS SECTIONS
T30.6089	708	CROSS SECTIONS
T30.6090	709	CROSS SECTIONS
T30.6091	710	CROSS SECTIONS
T30.6092	711	CROSS SECTIONS
T30.6093	712	CROSS SECTIONS
T30.6094	713	CROSS SECTIONS
T30.6095	714	CROSS SECTIONS
T30.6096	715	CROSS SECTIONS
T30.6097	716	CROSS SECTIONS
T30.6098	717	CROSS SECTIONS
T30.6099	718	CROSS SECTIONS
T30.6100	719	CROSS SECTIONS
T30.6101	720	CROSS SECTIONS
T30.6102	721	CROSS SECTIONS
T30.6103	722	CROSS SECTIONS
T30.6104	723	CROSS SECTIONS
T30.6105	724	CROSS SECTIONS
T30.6106	725	CROSS SECTIONS
T30.6107	726	CROSS SECTIONS
T30.6108	727	CROSS SECTIONS
T30.6109	728	CROSS SECTIONS
T30.6110	729	CROSS SECTIONS
T30.6111	730	CROSS SECTIONS
T30.6112	731	CROSS SECTIONS
T30.6113	732	CROSS SECTIONS
T30.6114	733	CROSS SECTIONS
T30.6115	734	CROSS SECTIONS
T30.6116	735	CROSS SECTIONS
T30.6117	736	CROSS SECTIONS
T30.6118	737	CROSS SECTIONS
T30.6119	738	CROSS SECTIONS
T30.6120	739	CROSS SECTIONS
T30.6121	740	CROSS SECTIONS
T30.6122	741	CROSS SECTIONS
T30.6123	742	CROSS SECTIONS
T30.6124	743	CROSS SECTIONS
T30.6125	744	CROSS SECTIONS
T30.6126	745	CROSS SECTIONS
T30.6127	746	CROSS SECTIONS
T30.6128	747	CROSS SECTIONS
T30.6129	748	CROSS SECTIONS
T30.6130	749	CROSS SECTIONS
T30.6131	750	CROSS SECTIONS
T30.6132	751	CROSS SECTIONS
T30.6133	752	CROSS SECTIONS
T30.6134	753	CROSS SECTIONS
T30.6135	754	CROSS SECTIONS
T30.6136	755	CROSS SECTIONS
T30.6137	756	CROSS SECTIONS
T30.6138	757	CROSS SECTIONS
T30.6139	758	CROSS SECTIONS
T30.6140	759	CROSS SECTIONS
T30.6141	760	CROSS SECTIONS
T30.6142	761	CROSS SECTIONS
T30.6143	762	CROSS SECTIONS
T30.6144	763	CROSS SECTIONS
T30.6145	764	CROSS SECTIONS
T30.6146	765	CROSS SECTIONS
T30.6147	766	CROSS SECTIONS

NOTICE: THE OFFICIAL RECORD OF THIS SHEET IS THE ELECTRONIC FILE SIGNED AND SEALED UNDER RULE 6G15-23.003, F.A.C.

REVISIONS

DATE	BY	DESCRIPTION	DATE	BY	DESCRIPTION

TRANSPORTATION
AECOM TECHNICAL SERVICES, Inc.
300 Colonial Center Pkwy, Suite 130
Lake Mary, FL. 32746
T 407.549.4200 F 407.549.4201
Certificate of Authorization No. 8115
DAVID S. BURWELL PE NO. 55853 www.aecom.com

STATE OF FLORIDA
DEPARTMENT OF TRANSPORTATION

ROAD NO.	COUNTY	FINANCIAL PROJECT ID
CFRC P2S	VARIOUS	423446-9-52-01

CENTRAL FLORIDA COMMUTER RAIL TRANSIT (CFCRT) PHASE 2 SOUTH

INDEX OF SHEETS

SHEET NO. 36

DRAWING NO.	SHEET NO.	TITLE
T30.6148	767	CROSS SECTIONS
T30.6149	768	CROSS SECTIONS
T30.6150	769	CROSS SECTIONS
T30.6151	770	CROSS SECTIONS
T30.6152	771	CROSS SECTIONS
T30.6153	772	CROSS SECTIONS
T30.6154	773	CROSS SECTIONS
T30.6155	774	CROSS SECTIONS
T30.6156	775	CROSS SECTIONS
T30.6157	776	CROSS SECTIONS
T30.6158	777	CROSS SECTIONS
T30.6159	778	CROSS SECTIONS
T30.6160	779	CROSS SECTIONS
T30.6161	780	CROSS SECTIONS
T30.6162	781	CROSS SECTIONS
T30.6163	782	CROSS SECTIONS
T30.6164	783	CROSS SECTIONS
T30.6165	784	CROSS SECTIONS
T30.6166	785	CROSS SECTIONS
T30.6167	786	CROSS SECTIONS
T30.6168	787	CROSS SECTIONS
T30.6169	788	CROSS SECTIONS
T30.6170	789	CROSS SECTIONS
T30.6171	790	CROSS SECTIONS
T30.6172	791	CROSS SECTIONS
T30.6173	792	CROSS SECTIONS
T30.6174	793	CROSS SECTIONS
T30.6175	794	CROSS SECTIONS
T30.6176	795	CROSS SECTIONS
T30.6177	796	CROSS SECTIONS
T30.6178	797	CROSS SECTIONS
T30.6179	798	CROSS SECTIONS
T30.6180	799	CROSS SECTIONS
T30.6181	800	CROSS SECTIONS
T30.6182	801	CROSS SECTIONS
T30.6183	802	CROSS SECTIONS
T30.6184	803	CROSS SECTIONS
T30.6185	804	CROSS SECTIONS
T30.6186	805	CROSS SECTIONS
T30.6187	806	CROSS SECTIONS
T30.6188	807	CROSS SECTIONS
T30.6189	808	CROSS SECTIONS
T30.6190	809	CROSS SECTIONS
T30.6191	810	CROSS SECTIONS
T30.6192	811	CROSS SECTIONS
T30.6193	812	CROSS SECTIONS
T30.6194	813	CROSS SECTIONS
T30.6195	814	CROSS SECTIONS
T30.6196	815	CROSS SECTIONS
T30.6197	816	CROSS SECTIONS
T30.6198	817	CROSS SECTIONS
T30.6199	818	CROSS SECTIONS
T30.6200	819	CROSS SECTIONS
T30.6201	820	CROSS SECTIONS
T30.6202	821	CROSS SECTIONS
T30.6203	822	CROSS SECTIONS
T30.6204	823	CROSS SECTIONS
T30.6205	824	CROSS SECTIONS
T30.6206	825	CROSS SECTIONS
T30.6207	826	CROSS SECTIONS
T30.6208	827	CROSS SECTIONS
T30.6209	828	CROSS SECTIONS
T30.6210	829	CROSS SECTIONS
T30.6211	830	CROSS SECTIONS
T30.6212	831	CROSS SECTIONS
T30.6213	832	CROSS SECTIONS
T30.6214	833	CROSS SECTIONS
T30.6215	834	CROSS SECTIONS
T30.6216	835	CROSS SECTIONS
T30.6217	836	CROSS SECTIONS
T30.6218	837	CROSS SECTIONS
T30.6219	838	CROSS SECTIONS
T30.6220	839	CROSS SECTIONS
T30.6221	840	CROSS SECTIONS
T30.6222	841	CROSS SECTIONS
T30.6223	842	CROSS SECTIONS
T30.6224	843	CROSS SECTIONS
T30.6225	844	CROSS SECTIONS
T30.6226	845	CROSS SECTIONS
T30.6227	846	CROSS SECTIONS
T30.6228	847	CROSS SECTIONS
T30.6229	848	CROSS SECTIONS
T30.6230	849	CROSS SECTIONS
T30.6231	850	CROSS SECTIONS
T30.6232	851	CROSS SECTIONS
T30.6233	852	CROSS SECTIONS
T30.6234	853	CROSS SECTIONS
T30.6235	854	CROSS SECTIONS
T30.6236	855	CROSS SECTIONS
T30.6237	856	CROSS SECTIONS
T30.6238	857	CROSS SECTIONS
T30.6239	858	CROSS SECTIONS
T30.6240	859	CROSS SECTIONS
T30.6241	860	CROSS SECTIONS
T30.6242	861	CROSS SECTIONS
T30.6243	862	CROSS SECTIONS
T30.6244	863	CROSS SECTIONS
T30.6245	864	CROSS SECTIONS
T30.6246	865	CROSS SECTIONS
T30.6247	866	CROSS SECTIONS
T30.6248	867	CROSS SECTIONS
T30.6249	868	CROSS SECTIONS
T30.6250	869	CROSS SECTIONS
T30.6251	870	CROSS SECTIONS
T30.6252	871	CROSS SECTIONS
T30.6253	872	CROSS SECTIONS
T30.6254	873	CROSS SECTIONS
T30.6255	874	CROSS SECTIONS
T30.6256	875	CROSS SECTIONS
T30.6257	876	CROSS SECTIONS
T30.6258	877	CROSS SECTIONS
T30.6259	878	CROSS SECTIONS
T30.6260	879	CROSS SECTIONS
T30.6261	880	CROSS SECTIONS
T30.6262	881	CROSS SECTIONS
T30.6263	882	CROSS SECTIONS

NOTICE: THE OFFICIAL RECORD OF THIS SHEET IS THE ELECTRONIC FILE SIGNED AND SEALED UNDER RULE 61G15-23.003, F.A.C.

REVISIONS					
DATE	BY	DESCRIPTION	DATE	BY	DESCRIPTION

TRANSPORTATION
AECOM TECHNICAL SERVICES, Inc.
300 Colonial Center Pkwy, Suite 130
Lake Mary, FL. 32746
T 407.549.4200 F 407.549.4201
Certificate of Authorization No. 8115
DAVID S. BURWELL PE NO. 55853 www.aecom.com

STATE OF FLORIDA
DEPARTMENT OF TRANSPORTATION

ROAD NO.	COUNTY	FINANCIAL PROJECT ID
CFRC P2S	VARIOUS	423446-9-52-01

CENTRAL FLORIDA COMMUTER RAIL TRANSIT (CFCRT) PHASE 2 SOUTH

INDEX OF SHEETS

SHEET NO. 37

DRAWING NO.	SHEET NO.	TITLE
T30.6264	883	CROSS SECTIONS
T30.6265	884	CROSS SECTIONS
T30.6266	885	CROSS SECTIONS
T30.6267	886	CROSS SECTIONS
T30.6268	887	CROSS SECTIONS
T30.6269	888	CROSS SECTIONS
T30.6270	889	CROSS SECTIONS
T30.6271	890	CROSS SECTIONS
T30.6272	891	CROSS SECTIONS
T30.6273	892	CROSS SECTIONS
T30.6274	893	CROSS SECTIONS
T30.6275	894	CROSS SECTIONS
T30.6276	895	CROSS SECTIONS
T30.6277	896	CROSS SECTIONS
T30.6278	897	CROSS SECTIONS
T30.6279	898	CROSS SECTIONS
T30.6280	899	CROSS SECTIONS
T30.6281	900	CROSS SECTIONS
T30.6282	901	CROSS SECTIONS
T30.6283	902	CROSS SECTIONS
T30.6284	903	CROSS SECTIONS
T30.6285	904	CROSS SECTIONS
T30.6286	905	CROSS SECTIONS
T30.6287	906	CROSS SECTIONS
T30.6288	907	CROSS SECTIONS
T30.6289	908	CROSS SECTIONS
T30.6290	909	CROSS SECTIONS
T30.6291	910	CROSS SECTIONS
T30.6292	911	CROSS SECTIONS
T30.6293	912	CROSS SECTIONS
T30.6294	913	CROSS SECTIONS
T30.6295	914	CROSS SECTIONS
T30.6296	915	CROSS SECTIONS
T30.6297	916	CROSS SECTIONS
T30.6298	917	CROSS SECTIONS
T30.6299	918	CROSS SECTIONS
T30.6300	919	CROSS SECTIONS
T30.6301	920	CROSS SECTIONS
T30.6302	921	CROSS SECTIONS
T30.6303	922	CROSS SECTIONS
T30.6304	923	CROSS SECTIONS
T30.6305	924	CROSS SECTIONS
T30.6306	925	CROSS SECTIONS
T30.6307	926	CROSS SECTIONS
T30.6308	927	CROSS SECTIONS
T30.6309	928	CROSS SECTIONS
T30.6310	929	CROSS SECTIONS
T30.6311	930	CROSS SECTIONS
T30.6312	931	CROSS SECTIONS
T30.6313	932	CROSS SECTIONS
T30.6314	933	CROSS SECTIONS
T30.6315	934	CROSS SECTIONS
T30.6316	935	CROSS SECTIONS
T30.6317	936	CROSS SECTIONS
T30.6318	937	CROSS SECTIONS
T30.6319	938	CROSS SECTIONS
T30.6320	939	CROSS SECTIONS
T30.6321	940	CROSS SECTIONS
T30.6322	941	CROSS SECTIONS
T30.6323	942	CROSS SECTIONS
T30.6324	943	CROSS SECTIONS
T30.6325	944	CROSS SECTIONS
T30.6326	945	CROSS SECTIONS
T30.6327	946	CROSS SECTIONS
T30.6328	947	CROSS SECTIONS
T30.6329	948	CROSS SECTIONS
T30.6330	949	CROSS SECTIONS
T30.6331	950	CROSS SECTIONS
T30.6332	951	CROSS SECTIONS
T30.6333	952	CROSS SECTIONS
T30.6334	953	CROSS SECTIONS
T30.6335	954	CROSS SECTIONS
T30.6336	955	CROSS SECTIONS
T30.6337	956	CROSS SECTIONS
T30.6338	957	CROSS SECTIONS
T30.6339	958	CROSS SECTIONS
T30.6340	959	CROSS SECTIONS
T30.6341	960	CROSS SECTIONS
T30.6342	961	CROSS SECTIONS
T30.6343	962	CROSS SECTIONS
T30.6344	963	CROSS SECTIONS
T30.6345	964	CROSS SECTIONS
T30.6346	965	CROSS SECTIONS
T30.6347	966	CROSS SECTIONS
T30.6348	967	CROSS SECTIONS
T30.6349	968	CROSS SECTIONS
T30.6350	969	CROSS SECTIONS
T30.6351	970	CROSS SECTIONS
T30.6352	971	CROSS SECTIONS
T30.6353	972	CROSS SECTIONS
T30.6354	973	CROSS SECTIONS
T30.6355	974	CROSS SECTIONS
T30.6356	975	CROSS SECTIONS
T30.6357	976	CROSS SECTIONS
T30.6358	977	CROSS SECTIONS
T30.6359	978	CROSS SECTIONS
T30.6360	979	CROSS SECTIONS
T30.6361	980	CROSS SECTIONS
T30.6362	981	CROSS SECTIONS
T30.6363	982	CROSS SECTIONS
T30.6364	983	CROSS SECTIONS
T30.6365	984	CROSS SECTIONS
T30.6366	985	CROSS SECTIONS
T30.6367	986	CROSS SECTIONS
T30.6368	987	CROSS SECTIONS
T30.6369	988	CROSS SECTIONS
T30.6370	989	CROSS SECTIONS
T30.6371	990	CROSS SECTIONS
T30.6372	991	CROSS SECTIONS
T30.6373	992	CROSS SECTIONS
T30.6374	993	CROSS SECTIONS
T30.6375	994	CROSS SECTIONS
T30.6376	995	CROSS SECTIONS
T30.6377	996	CROSS SECTIONS
T30.6378	997	CROSS SECTIONS
T30.6379	998	CROSS SECTIONS

NOTICE: THE OFFICIAL RECORD OF THIS SHEET IS THE ELECTRONIC FILE SIGNED AND SEALED UNDER RULE 61G15-23.003, F.A.C.

REVISIONS					
DATE	BY	DESCRIPTION	DATE	BY	DESCRIPTION

TRANSPORTATION
AECOM TECHNICAL SERVICES, Inc.
300 Colonial Center Pkwy, Suite 130
Lake Mary, FL. 32746
T 407.549.4200 F 407.549.4201
Certificate of Authorization No. 8115
DAVID S. BURWELL PE NO. 55853 www.aecom.com

STATE OF FLORIDA
DEPARTMENT OF TRANSPORTATION

ROAD NO.	COUNTY	FINANCIAL PROJECT ID
CFRC P2S	VARIOUS	423446-9-52-01

CENTRAL FLORIDA COMMUTER RAIL TRANSIT (CFCRT) PHASE 2 SOUTH

INDEX OF SHEETS

SHEET NO. 38

DRAWING NO.	SHEET NO.	TITLE
T30.6380	999	CROSS SECTIONS
T30.6381	1000	CROSS SECTIONS
T30.6382	1001	CROSS SECTIONS
T30.6383	1002	CROSS SECTIONS
T30.6384	1003	CROSS SECTIONS
T30.6385	1004	CROSS SECTIONS
T30.6386	1005	CROSS SECTIONS
T30.6387	1006	CROSS SECTIONS
T30.6388	1007	CROSS SECTIONS
T30.6389	1008	CROSS SECTIONS
T30.6390	1009	CROSS SECTIONS
T30.6391	1010	CROSS SECTIONS
T30.6392	1011	CROSS SECTIONS
T30.6393	1012	CROSS SECTIONS
T30.6394	1013	CROSS SECTIONS
T30.6395	1014	CROSS SECTIONS
T30.6396	1015	CROSS SECTIONS
T30.6397	1016	CROSS SECTIONS
T30.6398	1017	CROSS SECTIONS
T30.6399	1018	CROSS SECTIONS
T30.6400	1019	CROSS SECTIONS
T30.6401	1020	CROSS SECTIONS
T30.6402	1021	CROSS SECTIONS
T30.6403	1022	CROSS SECTIONS
T30.6404	1023	CROSS SECTIONS
T30.6405	1024	CROSS SECTIONS
T30.6406	1025	CROSS SECTIONS
T30.6407	1026	CROSS SECTIONS
T30.6408	1027	CROSS SECTIONS
T30.6409	1028	CROSS SECTIONS
T30.6410	1029	CROSS SECTIONS
T30.6411	1030	CROSS SECTIONS
T30.6412	1031	CROSS SECTIONS
T30.6413	1032	CROSS SECTIONS
T30.6414	1033	CROSS SECTIONS
T30.6415	1034	CROSS SECTIONS
T30.6416	1035	CROSS SECTIONS
T30.6417	1036	CROSS SECTIONS
T30.6418	1037	CROSS SECTIONS
T30.6419	1038	CROSS SECTIONS
T30.6420	1039	CROSS SECTIONS
T30.6421	1040	CROSS SECTIONS
T30.6422	1041	CROSS SECTIONS
T30.6423	1042	CROSS SECTIONS
T30.6424	1043	CROSS SECTIONS
T30.6425	1044	CROSS SECTIONS
T30.6426	1045	CROSS SECTIONS
T30.6427	1046	CROSS SECTIONS
T30.6428	1047	CROSS SECTIONS
T30.6429	1048	CROSS SECTIONS
T30.6430	1049	CROSS SECTIONS
T30.6431	1050	CROSS SECTIONS
T30.6432	1051	CROSS SECTIONS
T30.6433	1052	CROSS SECTIONS
T30.6434	1053	CROSS SECTIONS
T30.6435	1054	CROSS SECTIONS
T30.6436	1055	CROSS SECTIONS
T30.6437	1056	CROSS SECTIONS
T30.6438	1057	CROSS SECTIONS
T30.6439	1058	CROSS SECTIONS
T30.6440	1059	CROSS SECTIONS
T30.6441	1060	CROSS SECTIONS
T30.6442	1061	CROSS SECTIONS
T30.6443	1062	CROSS SECTIONS
T30.6444	1063	CROSS SECTIONS
T30.6445	1064	CROSS SECTIONS
T30.6446	1065	CROSS SECTIONS
T30.6447	1066	CROSS SECTIONS
T30.6448	1067	CROSS SECTIONS
T30.6449	1068	CROSS SECTIONS
T30.6450	1069	CROSS SECTIONS
T30.6451	1070	CROSS SECTIONS
T30.6452	1071	CROSS SECTIONS
T30.6453	1072	CROSS SECTIONS
T30.6454	1073	CROSS SECTIONS
T30.6455	1074	CROSS SECTIONS
T30.6456	1075	CROSS SECTIONS
T30.6457	1076	CROSS SECTIONS
T30.6458	1077	CROSS SECTIONS
T30.6459	1078	CROSS SECTIONS
T30.6460	1079	CROSS SECTIONS
T30.6461	1080	CROSS SECTIONS
T30.6462	1081	CROSS SECTIONS
T30.6463	1082	CROSS SECTIONS
T30.6464	1083	CROSS SECTIONS
T30.6465	1084	CROSS SECTIONS
T30.6466	1085	CROSS SECTIONS
T30.6467	1086	CROSS SECTIONS
T30.6468	1087	CROSS SECTIONS
T30.6469	1088	CROSS SECTIONS
T30.6470	1089	CROSS SECTIONS
T30.6471	1090	CROSS SECTIONS
T30.6472	1091	CROSS SECTIONS
T30.6473	1092	CROSS SECTIONS
T30.6474	1093	CROSS SECTIONS
T30.6475	1094	CROSS SECTIONS
T30.6476	1095	CROSS SECTIONS
T30.6477	1096	CROSS SECTIONS
T30.6478	1097	CROSS SECTIONS
T30.6479	1098	CROSS SECTIONS
T30.6480	1099	CROSS SECTIONS
T30.6481	1100	CROSS SECTIONS
T30.6482	1101	CROSS SECTIONS
T30.6483	1102	CROSS SECTIONS
T30.6484	1103	CROSS SECTIONS
T30.6485	1104	CROSS SECTIONS
T30.6486	1105	CROSS SECTIONS
T30.6487	1106	CROSS SECTIONS
T30.6488	1107	CROSS SECTIONS
T30.6489	1108	CROSS SECTIONS
T30.6490	1109	CROSS SECTIONS
T30.6491	1110	CROSS SECTIONS
T30.6492	1111	CROSS SECTIONS
T30.6493	1112	CROSS SECTIONS
T30.6494	1113	CROSS SECTIONS
T30.6495	1114	CROSS SECTIONS

NOTICE: THE OFFICIAL RECORD OF THIS SHEET IS THE ELECTRONIC FILE SIGNED AND SEALED UNDER RULE 61G15-23.003, F.A.C.

REVISIONS

DATE	BY	DESCRIPTION	DATE	BY	DESCRIPTION

TRANSPORTATION
AECOM TECHNICAL SERVICES, Inc.
300 Colonial Center Pkwy, Suite 130
Lake Mary, FL. 32746
T 407.549.4200 F 407.549.4201
Certificate of Authorization No. 8115
DAVID S. BURWELL PE NO. 55853 www.aecom.com

STATE OF FLORIDA
DEPARTMENT OF TRANSPORTATION

ROAD NO.	COUNTY	FINANCIAL PROJECT ID
CFRC P2S	VARIOUS	423446-9-52-01

CENTRAL FLORIDA COMMUTER RAIL TRANSIT (CFCRT) PHASE 2 SOUTH

INDEX OF SHEETS

SHEET NO. 39

DRAWING NO.	SHEET NO.	TITLE
~~T30.6496~~	~~1115~~	~~CROSS SECTIONS~~
~~T30.6497~~	~~1116~~	~~CROSS SECTIONS~~
~~T30.6498~~	~~1117~~	~~CROSS SECTIONS~~
~~T30.6499~~	~~1118~~	~~CROSS SECTIONS~~
~~T30.6500~~	~~1119~~	~~CROSS SECTIONS~~
~~T30.6501~~	~~1120~~	~~CROSS SECTIONS~~
~~T30.6502~~	~~1121~~	~~CROSS SECTIONS~~
~~T30.6503~~	~~1122~~	~~CROSS SECTIONS~~
~~T30.6504~~	~~1123~~	~~CROSS SECTIONS~~
~~T30.6505~~	~~1124~~	~~CROSS SECTIONS~~
~~T30.6506~~	~~1125~~	~~CROSS SECTIONS~~
~~T30.6507~~	~~1126~~	~~CROSS SECTIONS~~
~~T30.6508~~	~~1127~~	~~CROSS SECTIONS~~
~~T30.6509~~	~~1128~~	~~CROSS SECTIONS~~
~~T30.6510~~	~~1129~~	~~CROSS SECTIONS~~
~~T30.6511~~	~~1130~~	~~CROSS SECTIONS~~
~~V18.201~~	~~2204~~	~~VSLMF CREW BUILDING - HVAC PLAN~~
~~V18.241~~	~~2205~~	~~VSLMF HVAC SCHEDULES~~
~~V18.242~~	~~2206~~	~~VSLMF HVAC SCHEDULES~~
~~V18.251~~	~~2207~~	~~VSLMF HVAC DETAILS~~
~~V18.252~~	~~2208~~	~~VSLMF HVAC DETAILS~~
~~V18.253~~	~~2209~~	~~VSLMF HVAC DETAILS~~
~~V18.254~~	~~2210~~	~~VSLMF HVAC DETAILS~~
~~V18.255~~	~~2211~~	~~VSLMF HVAC DETAILS~~
W00.001	223	GENERAL INFORMATION
W14.007	1588	MEADOW WOODS STATION WAYFINDING PLAN
W14.007A	1589	MEADOW WOODS STATION WAYFINDING PLAN - 'A'
W14.007B	1590	MEADOW WOODS STATION WAYFINDING PLAN - 'B'
W14.007C	1591	MEADOW WOODS STATION WAYFINDING PLAN - 'C'
W14.007D	1592	MEADOW WOODS STATION WAYFINDING PLAN - 'D'
W14.007E	1593	MEADOW WOODS STATION WAYFINDING PLAN - 'E'
W14.007F	1594	MEADOW WOODS STATION WAYFINDING PLAN - 'F'
W14.201	1595	MEADOW WOODS STATION WAYFINDING PLAN
W14.202	1596	MEADOW WOODS STATION WAYFINDING PLAN
W14.700	1597	MEADOW WOODS STATION GRAPHICS DETAILS
W14.701	1598	MEADOW WOODS STATION GRAPHICS DETAILS
W14.702	1599	MEADOW WOODS STATION GRAPHICS DETAILS
W14.703	1600	MEADOW WOODS STATION GRAPHICS DETAILS
W14.704	1601	MEADOW WOODS STATION GRAPHICS DETAILS
W14.705	1602	MEADOW WOODS STATION GRAPHICS DETAILS
W14.706	1603	MEADOW WOODS STATION GRAPHICS DETAILS
W14.707	1604	MEADOW WOODS STATION GRAPHICS DETAILS
W14.708	1605	MEADOW WOODS STATION GRAPHICS DETAILS
W15.007	1758	OSCEOLA PARKWAY STATION GRAPHICS PLAN
W15.007A	1759	OSCEOLA PARKWAY STATION GRAPHICS PLAN - 'A'
W15.007B	1760	OSCEOLA PARKWAY STATION GRAPHICS PLAN - 'B'
W15.007C	1761	OSCEOLA PARKWAY STATION GRAPHICS PLAN - 'C'
W15.007D	1762	OSCEOLA PARKWAY STATION GRAPHICS PLAN - 'D'
W15.007E	1763	OSCEOLA PARKWAY STATION GRAPHICS PLAN - 'E'
W15.007F	1764	OSCEOLA PARKWAY STATION GRAPHICS PLAN - 'F'
W15.007G	1765	OSCEOLA PARKWAY STATION GRAPHICS PLAN - 'G'
W15.201	1766	OSCEOLA PARKWAY STATION GRAPHICS PLAN
W15.202	1767	OSCEOLA PARKWAY STATION GRAPHICS PLAN
W15.700	1768	OSCEOLA PARKWAY STATION GRAPHICS DETAILS
W15.701	1769	OSCEOLA PARKWAY STATION GRAPHICS DETAILS
W15.702	1770	OSCEOLA PARKWAY STATION GRAPHICS DETAILS
W15.703	1771	OSCEOLA PARKWAY STATION GRAPHICS DETAILS
W15.704	1772	OSCEOLA PARKWAY STATION GRAPHICS DETAILS
W15.705	1773	OSCEOLA PARKWAY STATION GRAPHICS DETAILS
W15.706	1774	OSCEOLA PARKWAY STATION GRAPHICS DETAILS
W15.707	1775	OSCEOLA PARKWAY STATION GRAPHICS DETAILS
W15.708	1776	OSCEOLA PARKWAY STATION GRAPHICS DETAILS
W16.007	1863	KISSIMMEE STATION WAYFINDING PLAN
W16.007C	1864	KISSIMMEE STATION WAYFINDING PLAN - 'C'
W16.007D	1865	KISSIMMEE STATION WAYFINDING PLAN - 'D'
W16.201	1866	KISSIMMEE STATION WAYFINDING PLAN
W16.202	1867	KISSIMMEE STATION WAYFINDING PLAN
W16.700	1868	KISSIMMEE STATION GRAPHICS DETAILS
W16.702	1869	KISSIMMEE STATION GRAPHICS DETAILS
W16.704	1870	KISSIMMEE STATION GRAPHICS DETAILS
W16.705	1871	KISSIMMEE STATION GRAPHICS DETAILS
W16.706	1872	KISSIMMEE STATION GRAPHICS DETAILS
W16.707	1873	KISSIMMEE STATION GRAPHICS DETAILS
W16.708	1874	KISSIMMEE STATION GRAPHICS DETAILS
W16.709	1875	KISSIMMEE STATION GRAPHICS DETAILS
W16.710	1876	KISSIMMEE STATION GRAPHICS DETAILS
W16.711	1877	KISSIMMEE STATION GRAPHICS DETAILS
W17.007	2081	POINCIANA STATION WAYFINDING PLAN
W17.007A	2082	POINCIANA STATION WAYFINDING PLAN - 'A'
W17.007B	2083	POINCIANA STATION WAYFINDING PLAN - 'B'
W17.007C	2084	POINCIANA STATION WAYFINDING PLAN - 'C'
W17.007D	2085	POINCIANA STATION WAYFINDING PLAN - 'D'
W17.007E	2086	POINCIANA STATION WAYFINDING PLAN - 'E'
W17.007F	2087	POINCIANA STATION WAYFINDING PLAN - 'F'
W17.007G	2088	POINCIANA STATION WAYFINDING PLAN - 'G'
W17.007H	2089	POINCIANA STATION WAYFINDING PLAN - 'H'
W17.007I	2090	POINCIANA STATION WAYFINDING PLAN - 'I'
W17.007J	2091	POINCIANA STATION WAYFINDING PLAN - 'J'
W17.201	2092	POINCIANA STATION WAYFINDING PLAN
W17.202	2093	POINCIANA STATION WAYFINDING PLAN
W17.700	2094	POINCIANA STATION GRAPHICS DETAILS
W17.701	2095	POINCIANA STATION GRAPHICS DETAILS
W17.702	2096	POINCIANA STATION GRAPHICS DETAILS
W17.703	2097	POINCIANA STATION GRAPHICS DETAILS
W17.704	2098	POINCIANA STATION GRAPHICS DETAILS
W17.705	2099	POINCIANA STATION GRAPHICS DETAILS
W17.706	2100	POINCIANA STATION GRAPHICS DETAILS
W17.707	2101	POINCIANA STATION GRAPHICS DETAILS
W17.708	2102	POINCIANA STATION GRAPHICS DETAILS
W20.700-A	224	GRAPHICS DETAILS
W20.700-B	225	GRAPHICS DETAILS
W20.701	226	GRAPHICS DETAILS
W20.702	227	GRAPHICS DETAILS
W20.705	228	GRAPHICS DETAILS
W20.708	229	GRAPHICS DETAILS
W20.710	230	GRAPHICS DETAILS
W20.712	231	GRAPHICS DETAILS
W20.713	232	GRAPHICS DETAILS
W20.714	233	GRAPHICS DETAILS
W20.715	234	GRAPHICS DETAILS
W20.716A	235	GRAPHICS DETAILS
W20.717	236	GRAPHICS DETAILS
W20.719	237	GRAPHICS DETAILS
W20.719B	238	GRAPHICS DETAILS
W20.720	239	GRAPHICS DETAILS
W20.722	240	GRAPHICS DETAILS

DRAWING NO.
C00.001TT

NOTICE: THE OFFICIAL RECORD OF THIS SHEET IS THE ELECTRONIC FILE SIGNED AND SEALED UNDER RULE 61G15-23.003, F.A.C.

REVISIONS

DATE	BY	DESCRIPTION	DATE	BY	DESCRIPTION

TRANSPORTATION
AECOM TECHNICAL SERVICES, Inc.
300 Colonial Center Pkwy, Suite 130
Lake Mary, FL. 32746
T 407.549.4200 F 407.549.4201
Certificate of Authorization No. 8115
DAVID S. BURWELL PE NO. 55853 www.aecom.com

STATE OF FLORIDA
DEPARTMENT OF TRANSPORTATION

ROAD NO.	COUNTY	FINANCIAL PROJECT ID
CFRC P2S	VARIOUS	423446-9-52-01

CENTRAL FLORIDA COMMUTER RAIL TRANSIT (CFCRT) PHASE 2 SOUTH

INDEX OF SHEETS

SHEET NO.
40

DRAWING NO.
C00.00IUU

DRAWING NO.	SHEET NO.	TITLE
W20.723	24I	GRAPHICS DETAILS
W20.725	242	GRAPHICS DETAILS
W20.726	243	GRAPHICS DETAILS
W20.727	244	GRAPHICS DETAILS
W20.728	245	GRAPHICS DETAILS
W20.729	246	GRAPHICS DETAILS
W20.800	247	GENERAL INFORMATION, MESSAGE SCHEDULE
W20.80I	248	COLOR SCHEDULE
W20.802	249	COLOR SCHEDULE
W20.803	250	COLOR SCHEDULE
W20.804	25I	COLOR SCHEDULE
W20.805A	I606	MEADOW WOODS STATION MESSAGE SCHEDULE
W20.805B	I607	MEADOW WOODS STATION MESSAGE SCHEDULE
W20.806A	I777	OSCEOLA PARKWAY STATION MESSAGE SCHEDULE
W20.806B	I778	OSCEOLA PARKWAY STATION MESSAGE SCHEDULE
W20.807	I878	KISSIMMEE STATION MESSAGE SCHEDULE
W20.808	2I03	POINCIANA STATION MESSAGE SCHEDULE

DRAWING NO.	SHEET NO.	TITLE

NOTICE: THE OFFICIAL RECORD OF THIS SHEET IS THE ELECTRONIC FILE SIGNED AND SEALED UNDER RULE 6GI5-23.003, F.A.C.

REVISIONS

DATE	BY	DESCRIPTION	DATE	BY	DESCRIPTION

TRANSPORTATION
AECOM TECHNICAL SERVICES, Inc.
300 Colonial Center Pkwy, Suite 130
Lake Mary, FL. 32746
T 407.549.4200 F 407.549.4201
Certificate of Authorization No. 8115
DAVID S. BURWELL PE NO. 55853 www.aecom.com

STATE OF FLORIDA
DEPARTMENT OF TRANSPORTATION

ROAD NO.	COUNTY	FINANCIAL PROJECT ID
CFRC P2S	VARIOUS	423446-9-52-0I

CENTRAL FLORIDA COMMUTER RAIL TRANSIT (CFCRT) PHASE 2 SOUTH

INDEX OF SHEETS

SHEET NO.
4I

ABBREVIATIONS

ABBREVIATIONS	DESCRIPTIONS
A	AMP, AMPERES, LIGHT FIXTURE TYPE A
A.B.	ANCHOR BOLT
A.F.F or AFF	ABOVE FINISHED FLOOR
A.I.S.I.	AMER. IRON & STEEL INSTITUTE
A.O.S.	APPARENT OPENING SIZE
AASHTO	AMERICAN ASSOCIATION OF STATE HIGHWAY
	AND TRANSPORTATION OFFICIALS
ABND	ABANDONED
ABV	ABOVE
AC	ACRE, ALTERNATING CURRENT, AIR
	CONDITIONING
ACI	AMERICAN CONCRETE INSTITUTE
ACT	ACOUSTICAL CEILING TILE
AD	ADDENDUM
ADA	AMERICANS WITH DISABILITIES ACT
ADD'L	ADDITIONAL
ADJ	ADJACENT, ADJUSTABLE
AE	LIGHT FIXTURE TYPE AE
AFR	ABOVE FINISHED ROOF
AGG	AGGREGATE
AHD	AHEAD
AHRI	AIR-CONDITIONING HEATING AND
	REFRIGERATION INSTITUTE
AHU	AIR HANDLING UNIT
AISC	AMERICAN INSTITUTE OF STEEL
	CONSTRUCTION
ALT	ALTERNATE
ALUM	ALUMINUM
AMP	AMPLIFIER
AMS	APPLICATION & MATRIX SERVER
ANC	AMBIENT NOISE COLLECTOR
ANS	AMBIENT NOISE SENSOR
ANSI	AMERICAN NATIONAL STANDARDS INSTITUTE
APPROX	APPROXIMATE
ARCH	ARCHITECTURAL
AREMA	AMERICAN RAILWAY ENGINEERING AND
	MAINTENANCE OF WAY ASSOCIATION
ASCE	AMERICAN SOCIETY OF CIVIL ENGINEERS
ASD	ALLOWABLE STRESS DESIGN
ASPH	ASPHALT
ASSE	AMERICAN SOCIETY OF SANITARY
	ENGINEERING
ASTM	AMERICAN SOCIETY FOR TESTING MATERIALS
AT	AERIAL TARGET
ATCS	ADVANCED TRAIN CONTROL SYSTEM
ATS	AUTOMATIC TRANSFER SWITCH
AVE	AVENUE
AVG	ANALOG VOICE GATEWAY
AWG	AMERICAN WIRE GAUGE
AWS	AMERICAN WELDING SOCIETY
AWWA	AMERICAN WATER WORKS ASSOCIATION
B	LIGHT FIXTURE TYPE B
B.B.	BOND BEAM
B.F.F.	BELOW FINISH FLOOR

ABBREVIATIONS	DESCRIPTIONS
B.O.,BOT., BT, B/	BOTTOM, BOTTOM OF
B.P.	BASE PLATE
B.S.	BOTH SIDES
B.U.	BUILT UP
BAS	BASIN
BCP	BASIC CALL PROCESS
BE	BURIED ELECTRIC
BFO	BURIED FIBER OPTIC
BHP	BRAKE HORSEPOWER
BIT.	BITUMINOUS
BK	BACK
BL	BASE LINE
BLC	BASE LINE CONTROL
BLDG	BUILDING
BLVD	BOULEVARD
BLW	BELOW
BM	BENCHMARK
BNCH	BENCH
BNDRY	BOUNDARY
BO	BASIN OUTLET
BOB	BOTTOM OF BANK
BOC	BACK OF CURB
BOD	BOTTOM OF DITCH
BOG	BOTTOM OF GUTTER
BOR	BORDER
BR	BRANCH, BRIDGE
BRDG	BRIDGING
BRG	BEARING
BRK	BRICK, BREAK, BROKEN
BS	BELL SOUTH
BT	BURIED TELEPHONE
BTU	BRITISH THERMAL UNIT
BTV	BURIED TV
BTWN	BETWEEN
BUS	BUSINESS
BWF	BARBED WIRE FENCE
BX	BOX
BXC	BOX CULVERT
C	CONDUCTOR, CONDUIT
C.B.	CONCRETE BEAM
C.C.	CONCRETE COLUMN
C.I.P.	CAST IN PLACE
C.J., CSJ	CONSTRUCTION JOINT, CONTROL JOINT
C.M.	CONCRETE MASONRY
C.M.U. or CMU	CONCRETE MASONRY UNIT
C.O.	CERTIFICATE OF OCCUPANCY
C/C	CENTER TO CENTER
CA	COMPRESSED AIR
CAN	CANAL
CAT	CATEGORY, COMPRESSED AIR
CATV	CABLE TELEVISION
CATVS	CABLE SERVICE BOX
CB	CATCH BASIN, CIRCUIT BREAKERS, CHORD
	BEARING, CONCRETE BLOCK STRUCTURE,
	CERAMIC TILE BASE

ABBREVIATIONS	DESCRIPTIONS
CBC	CONCRETE BLOCK CULVERT
CBS	CONCRETE BLOCK STRUCTURE
CBW	CONCRETE BARRIER WALL
CCB	COMMUNICATIONS CABINET BOX
CCTV	CLOSED CIRCUIT TELEVISION
CCTVPS	CCTV POWER SUPPLY
CEC	COMMUNICATION EQUIPMENT CABINET
CF	CURB FACE, CUBIC FEET
CFCRT	CENTRAL FLORIDA COMMUTER RAIL TRANSIT
CFM	CUBIC FEET PER MINUTE
CFRC	CENTRAL FLORIDA RAIL COORIDOR
CG	CURB AND GUTTER
CI	CAST IRON
CIF	COMMON INTERMEDIATE FORMAT
CINL	CURB INLET
CIP	CAST IRON PIPE
CJ	CONTROL JOINT
CKT	CIRCUIT
℄, CL, C/L	CENTERLINE
CLEAR	CLEAR(ANCE)
CLF	CHAIN LINK FENCE
CLR	CLEARANCE
CM	CONCRETE MONUMENT
CMP	CORRUGATED METAL PIPE
CNTR	CONTOUR
CO	CLEANOUT, CROSSOVER, COMPANY, COUNTY
COE	U.S. ARMY CORPS OF ENGINEERS
COL	COLUMN
COMM	COMMUNICATIONS
CON	CONNECTION
CONC.	CONCRETE
CONF.	CONFERENCE
CONST	CONSTRUCT, CONSTRUCTION
CONT	CONTINUOUS
CONTR	CONTRACTOR
COORD	COORDINATE
COP	COEFFICIENT OF PERFORMANCE
CORR	CORRUGATED
COTG	CLEANOUT TO GRADE
CP	CONCRETE PIPE, CONTROL POINT
CPT	CARPET
CPVT	CONCRETE PAVEMENT
CR	CARD READER, COUNTY ROAD
CS	CURVE TO SPIRAL, CURVE TO SPIRAL POINT
CSK	COUNTER SINK
CSL	CONCRETE SLAB
CSP	CORRUGATED STEEL PIPE
CSS	CENTRAL STORAGE SERVER
CT	CERAMIC TILE, CURRENT TRANSFORMER
CTLVR	CANTILEVER
CTR	CENTER
CTR'D	CENTERED
CTS	COMM. TRANSMISSION SYSTEM
CU	CONDENSING UNIT
CUL	CUL-DE-SAC
CULV	CULVERT

NOTICE: THE OFFICIAL RECORD OF THIS SHEET IS THE ELECTRONIC FILE SIGNED AND SEALED UNDER RULE 61G15-23.003, F.A.C.

REVISIONS

DATE	BY	DESCRIPTION	DATE	BY	DESCRIPTION

TRANSPORTATION
AECOM TECHNICAL SERVICES, Inc.
300 Colonial Center Pkwy, Suite 130
Lake Mary, FL. 32746
T 407.549.4200 F 407.549.4201
Certificate of Authorization No. 8115
DAVID S. BURWELL PE NO. 55853 www.aecom.com

STATE OF FLORIDA
DEPARTMENT OF TRANSPORTATION

ROAD NO.	COUNTY	FINANCIAL PROJECT ID
CFRC P2S	VARIOUS	423446-9-52-01

CENTRAL FLORIDA COMMUTER RAIL TRANSIT (CFCRT) PHASE 2 SOUTH

ABBREVIATIONS

SHEET NO. 42

DRAWING NO.
C00.006B

ABBREVIATIONS	DESCRIPTIONS
CW	COLD WATER, CONTINUOUS WELD,
	DOMESTIC COLD WATER
CWR	CONTINOUSLY WELDED RAIL
CY	CUBIC YARDS
D	DEGREE, LIGHT FIXTURE TYPE D
D.L.	DEAD LOAD
dB	DECIBELS
DB	DESIGN BUILD
DBB	DESIGN BID BUILD
DBH	DIAMETER AT BREAST HEIGHT
DBI	DITCH BOTTOM INLET
DBL	DOUBLE
dBM	DECIBELS REFERENCED TO 1MILLIWATT
DBM	DESIGN BID MAINTAIN
DC	DIRECT CURRENT, DOOR CONTACT
DCK	DOCK
DEMO	DEMOLISH
DEPT.	DEPARTMENT
DESC.	DESCRIPTION
DET, DTL	DETAIL
DFU	DRAINAGE FIXTURE UNIT
DH	DRILL HOLE
DIA	DIAMETER
DI	DUCTILE IRON, DIAMETER
DIAG	DIAGONAL
DIM	DIMENSION
DIP	DUCTILE IRON PIPE
DIST	DISTANCE, DISTRICT
DN	DOWN
DP	DISTRIBUTION PANEL
DPI	DITCH POINT OF INTERSECTION
DR	DRIVE
DRWY, DWY	DRIVEWAY
DS	DOWNSPOUT
DSW	DESIGN STORM WATER
DT	DUCT BANK
DTL	DEATIL
DTM	DIGITAL TERRAIN MODEL
DTMF	DIAL TONE MULTI FREQUENCY
DVR	DIGITAL VIDEO RECORDER
DWG	DRAWING
DWGS	DRAWINGS
DWL	DOWEL
E	EAST, EASTING
E.E.	EACH END
E.F.	EACH FACE
E.S.	EACH SIDE
E.W.	EACH WAY
EA	EACH, ACTUAL SUPERELEVATION
EAT	ENTERING AIR TEMPERATURE
ECB	EMERGENCY CALL BOX
ECO	EXTERIOR CLEANOUT
EER	ENERGY EFFICIENCY RATIO
EF	EXHAUST FAN

ABBREVIATIONS	DESCRIPTIONS
EJ	EXPANSION JOINT
EL	ELECTRIC LOCK, ELEVATION
ELEC	ELECTRICAL
ELEV	ELEVATION
EM	EMERGENCY LIGHTING
EMT	ELECTRICAL METALLIC TUBING
ENGR	ENGINEER
EOP	EDGE OF PAVEMENT
EQ	EQUAL
EQ. SP.	EQUAL SPACE(S)(ING)
ERCP	ELLIPTICAL REINFORCED CONCRETE PIPE
ES	ETHERNET SWITCH
ESP	EXTERNAL STATIC PRESSURE
EST	ESTIMATED
ETH	ETHERNET
EU	UNDERBALANCED SUPERELEVATION
EWH	ELECTRIC WATER HEATER
EWT	ENTERING WATER TEMPERATURE
EX	EXAMPLE, EXISTING
EXIST	EXISTING
EXP	EXPANSION,EXPOSED
EXT	EXTERIOR, EXTENSION
EXWY	EXPRESSWAY
F	FINAL
F&I	FURNISH AND INSTALL
F.D.E.P.	FLORIDA DEPT OF EVIRONMENTAL
	PROTECTION
F.F.	FINISH FLOOR, FAR FACE
F.G.	FINISH GRADE
F.S.	FAR SIDE
F/	FACE OF
F/O, FO	FIBER OPTIC
FAB.	FABRICATED
FBC	FLORIDA BUILDING CODE
FCU	FAN COOLING UNIT, FAN COIL UNIT
FD	FRENCH DRAIN, FLOOR DRAIN
FDN.	FOUNDATION
FDOT	FLORIDA DEPARTMENT OF TRANSPORTATION
FDP	FIBER DISTRIBUTION PANEL
FEC	FIBER/ETHERNET CONVERTER
FES	FLARED END SECTION
FFRW	FRONT FACE RETAINING WALL
FH	FIRE HYDRANT
FIN	FINISH, FINISHED
FL	FLOW LINE, FLOOR, FREIGHT LEAD, FLORIDA
FLA	FLORIDA, FULL LOAD AMPS
FLG	FLANGE
FLM	FLUME
FM	FORCE MAIN
F'M	SPECIFIED COMPRESSIVE STRENGHT OF
	MASONRY
FNC	FENCE
FOC	FIBER OPTIC CABLE
FOTS	FIBER OPTIC TRANSMISSION SYSTEM
FP	FLAG POLE, FINANCIAL PROJECT

ABBREVIATIONS	DESCRIPTIONS
FPL	FLORIDA POWER AND LIGHT
FPM	FEET PER MINUTE
FPN	FINANCIAL PROJECT NUMBER
FPUC	FLORIDA PUBLIC UTILITIES COMMISSION
FR	FRAME
FT	FDOT, FEET
FTG	FOOTING
FTP	FLORIDA TRAFFIC PLANS
FV	FIELD VERIFY
FX	ETHERNET TRANSMISSION CARD
FY	YIELD STRESS
G	GAS
G.B.	GRADE BEAM
G.C.	GENERAL CONTRACTOR
GA	GAGE, GAUGE, GALLON
GALV, GA	GALVANIZED
GBIT	GIGABIT
GFCI	GROUND FAULT CIRCUIT INTERRUPTER
GFI	GROUND FAULT INTERRUPTER
GLB	GLU-LAM BEAM
GM	GAS MAIN
GPH	GALLONS PER HOUR
GPM	GALLONS PER MINUTE
GPS	GLOBAL POSITIONING SYSTEM
GR	GRADE
GRD, GND	GROUND
GT	GATE
GTTR	GUTTER
GV	GAS VALVE, GATE VALVE
GVC	GAS VALVE COVER
GVL	GRAVEL
GWB	GYPSUM WALL BOARD
GY	GUY ANCHOR
GYP	GUY POLE, GYPSUM
GYPBD	GYPSUM BOARD
GYW	GUY WIRE
H.C.	HOLLOW CORE
H.P.	HIGH POINT
H.S.	HIGH STUD
HB	HOSE BIB
HDG	HOT DIPPED GALVANIZED STEEL
HDPE	HIGH DENSITY POLYETHYLENE
HDWL	HEAD WALL
HED	HEDGE
HEP	HEADEND POWER
HK	HOOK
HMA	HOT MIX ASPHALT
HNDRL	HANDRAIL
HOR	HORIZONTAL
HPL	HIGH PRESSURE LAMINATE
HR	HOUR
HSE	HOUSE
HSS	HOLLOW STRUCTURAL STEEL
HT	HEIGHT

NOTICE: THE OFFICIAL RECORD OF THIS SHEET IS THE ELECTRONIC FILE SIGNED AND SEALED UNDER RULE 61G15-23.003, F.A.C.

REVISIONS

DATE	BY	DESCRIPTION	DATE	BY	DESCRIPTION

TRANSPORTATION
AECOM TECHNICAL SERVICES, Inc.
300 Colonial Center Pkwy, Suite 130
Lake Mary, FL. 32746
T 407.549.4200 F 407.549.4201
Certificate of Authorization No. 8115
DAVID S. BURWELL PE NO. 55853 www.aecom.com

STATE OF FLORIDA
DEPARTMENT OF TRANSPORTATION

ROAD NO.	COUNTY	FINANCIAL PROJECT ID
CFRC P2S	VARIOUS	423446-9-52-01

CENTRAL FLORIDA COMMUTER RAIL TRANSIT (CFCRT) PHASE 2 SOUTH

ABBREVIATIONS

SHEET NO.
43

PrinceK 5/22/2015 6:22:21 PM Q:\4234469520\roadway\C00-006 - Abbreviations.dgn

DRAWING NO.
C00.006C

ABBREVIATIONS	DESCRIPTIONS
HVAC	HEATING,VENTILATION AND AIR CONDITIONING
HWY	HIGHWAY
HYD	HYDRANT, HYDRAULIC
HZ	HERTZ - CYCLES PER SECOND
I	INTERSTATE, MOMENT OF INERTIA
I.D., ID	INSIDE DIAMETER
I.F.	INSIDE FACE
I.P.S.,IPS	IRON PIPE SIZE
I/O	INPUT / OUTPUT MODULE
ID	IDENTIFIER, IDENTIFICATION
IEER	INTEGRATED ENERGY EFFICIENCY RATIO
IMC	INTERMEDIATE METAL CONDUIT
IN	INCHES, MOMENT OF INERTIA (NEG BENDING)
INFO	INFORMATION
INL	INLET
INSUL	INSULATION
INT	INTERIOR, INTERLOCKING
INV	INVERT
IOS	INITIAL OPERATING SEGMENT, OMOTOA,
	OPERATING SEGMENT
IP	IRON PIPE OR INTERNET PROTOCOL,
	MOMENT OF INERTIA (POSITIVE BENDING)
ISA	INTERNATIONAL SOCIETY OF ARBORICULTURE
ISL	ISLAND
ITS	INTELLIGENT TRANSPORTATION SYSTEM
ITW	ILLINOIS TOOL WORKS
JB	JUNCTION BOX
JST	JOIST
JT	JOINT
K.O.	KIP, KNOCK OUT
KM	KILOMETERS
Kv	KILOVOLTS
KVA	KILOVOLT AMPS
KW	KILOWATT
KWY	KEYWAY
L	LENGTH, LIGHT, LEFT
L.L.	LIVE LOAD
L.P.	LOW POINT
L.S.H.	LONG SLOTTED HOLES
L.V.L.	LAMINATED VENEER LUMBER
LAT	LEAVING AIR TEMPERATURE
LB	POUND
LB/SY	POUNDS PER SQUARE YARD
LBR	LIMEROCK BEARING RATION
LBS.	POUNDS
LC	LENGTH OF CURVE
LDG	LANDING
LF	LINEAR FEET, LINEAR FOOT
LG	LONG
LH	LEFT HAND
LIQ.	LIQUID
LLH	LONG LEG HORIZONTAL

ABBREVIATIONS	DESCRIPTIONS
LLV	LONG LEG VERTICAL
LN	LANE
LNTL	LINTEL
LONG.	LONGITUDINAL
LP	LIGHT POLE, LOAD PANEL
LS	LENGTH OF SPIRAL
LT	LEFT
LTG	LIGHT
LVC	LENGTH OF VERTICAL CURVE
LWT	LEAVING WATER TEMPERATURE
M.B.	MASONRY BEAM
M.C.	MOMENT CONNECTION
M.O., MO	MASONRY OPENING
M.S.	METAL STUD
MAINT.	MAINTENANCE
MAS, MSNRY	MASONRY
MAX	MAXIMUM
MBH	THOUSAND BTUs PER HOUR
MBM	THOUSAND (FT) BOARD MEASURE, METAL
	BUIDLING MFR
Mbps	MEGABITS PER SECOND
MBX	MAILBOX
MC	METAL-CLAD
MCA	MINIMUM CIRCUIT AMPS
MCJ	MASONRY CONTROL JOINT
ME	METER, ELECTRIC
MECH	MECHANICAL
MED	MEDIAN, MEDIUM
MEP	MECHANICAL ELEECTRICAL PLUMBING
MES	MITERED END SECTION,MANAGED ETHERNET
	SWITCH
MEZZ	MEZZANINE
MFR	MANUFACTURE, MANUFACTURER
MH	MANHOLE, COVER
MHD	MANHOLE, STORM
MHE	MANHOLE, ELECTRIC
MHS	MANHOLE, SEWER
MIN	MINIMUM
MISC	MISCELLANEOUS
MK	MARK
ML	MICROLAM
MLI	MAINLINE 1
ML2	MAINLINE 2
MLM	MOMENT
MM	MILLIMETER
MMS	MODULAR MANAGED SWITCH
MOCP	MAXIMUM OVER CURRENT PROTECTION
MOD.	MODIFIED,MOTOR OPERATED CONTROL
	DAMPER
MON	MONUMENT
MONW	MONITORING WELL
MP	MILEPOST
MPH	MILES PER HOUR
MSB	MAIN SWITCH BOARD
MTD	MOUNTED

ABBREVIATIONS	DESCRIPTIONS
MTL	METAL
MUTCD	MANUAL ON UNIFORM TRAFFIC CONTROL
	DEVICES
N	NORTH, NORTHING
N.F.	NEAR FACE
N.G.S.	NATIONAL GEODETIC SURVEY
N.S.	NEAR SIDE
N.T.S.	NOT TO SCALE
N/C	NORMALLY CLOSED
N/O	NORMALLY OPEN, NORTH OF
NA	NOT APPLICABLE
NAVD 88	NORTH AMERICAN VERTICAL DATUM
NEC	NATIONAL ELECTRICAL CODE
NECA	NATIONAL ELECTRICAL CONTRACTORS
	ASSOCIATION
NEMA	NATIONAL ELECTRICAL MANUFACTURERS
	ASSOCIATION
NESC	NATIONAL ELECTRICAL SAFETY CODE
NFPA	NATIONAL FIRE PROTECTION ASSOCIATION
NGVD.	NATIONAL GEODETIC VERTICAL DATUM
NIC	NOT IN CONTRACT
NM	NANOMETERS
NO	NUMBER
NOA	NOTICE OF ACCEPTANCE
NOAA	NATIONAL OCEANIC AND ATHMOSPHERIC
	ADMINISTRATION
NPDES	NATIONAL POLLUTANT DISCHARGE
	ELIMINATION SYSTEM
NPT	NATIONAL PIPE THREAD
NRCP	NON-REINFORCED CONCRETE PIPE
NTS	NOT TO SCALE
NVD	NETWORK VIDEO DECODER
NVR	NETWORK VIDEO RECORDER
NVX	NETWORK VIRTUAL MATRIX
O.B.	OVER BUILT
O.F.	OUTSIDE FACE
O.S.W.	OTHER SURFACE WATER
OA	OVERALL, OUTSIDE AIR
OAE	OR APPROVED EQUAL
OC	ON CENTER
OCC	OPERATIONS CONTROL CENTER
OD	OUTSIDE DIAMETER
OH	OVERHEAD, OPPOSITE HAND
OHS	OVERHEAD SIGN
OPASS	OVERPASS
OPG,OPNG	OPENING
OPP	OPPOSITE
OS	OCCUPANCY SENSOR
OSHA	OCCUPATIONAL SAFETY AND HEALTH
	ADMINISTRATION
P	PLAN
P.A.P	POWDER ACTUATED FASTENER
P.C.	POINT OF CURVATURE

NOTICE: THE OFFICIAL RECORD OF THIS SHEET IS THE ELECTRONIC FILE SIGNED AND SEALED UNDER RULE 61G15-23.003, F.A.C.

REVISIONS

DATE	BY	DESCRIPTION	DATE	BY	DESCRIPTION

TRANSPORTATION
AECOM TECHNICAL SERVICES, Inc.
300 Colonial Center Pkwy, Suite 130
Lake Mary, FL. 32746
T 407.549.4200 F 407.549.4201
Certificate of Authorization No. 8115
DAVID S. BURWELL PE NO. 55853 www.aecom.com

STATE OF FLORIDA
DEPARTMENT OF TRANSPORTATION

ROAD NO.	COUNTY	FINANCIAL PROJECT ID
CFRC P2S	VARIOUS	423446-9-52-01

CENTRAL FLORIDA COMMUTER RAIL TRANSIT (CFCRT) PHASE 2 SOUTH

ABBREVIATIONS

SHEET NO. 44

PrinceK 5/22/2015 6:22:22 PM Q:\4234469520I\roadway\C00-006 - Abbreviations.dgn

DRAWING NO.
C00.006D

ABBREVIATIONS	DESCRIPTIONS
P.I.P.	POUR IN PLACE
P.L.F.	POUNDS PER LINEAR FOOT
P.S.L.	PARALLEL STRAND LUMBER
P.T.	POINT OF TANGENT, PRESSURE TREATED
P2S	PHASE 2 SOUTH
PA	PASCAL OR PUBLIC ADDRESS
PAT	PASSENGER ASSISTANCE TELEPHONE
PB	PULL BOX
PC	POINT OF CURVATURE OR PRECAST
PCT	PRESTRESSED CONCRETE TRESTLE
PE	PROFESSIONAL ENG, PRE-ENGINEERED
PED	PEDESTRIAN
PEN.	PENETRATION
PERIM	PERIMETER
PERP	PERPENDICULAR
PGL	PROFILE GRADE LINE
PH	PHASE, MEASURE OF ACIDITY OR ALKALINITY
PI	POINT OF INTERSECTION, POINT OF
	INFLECTION
PIL	PILING
PKWY	PARKWAY
PL	PLATE
PLA	PLATFORM
PLBG	PLUMBING
PLEQ	PLAYGROUND EQUIPMENT
PLN	PLANTERS
PLY OR PLYWD	PLYWOOD
PNL	PANEL
PNT, PT	PAINT
POB	POINT OF BEGINNING
PP	POWER POLE
PPT	POWER POLE W/ TRANSFORMER
PREFAB	PRE-FABRICATED
PREMANUF	PRE-MANUFACTURED
PROC.	PROCTOR
PROP.	PROPOSED
PS	POINT OF SWITCH, PEDESTRIAN SIGN,
	POWER SUPPLY
PSCR	PUBLIC SIDEWALK CURB RAMP
PSF	POUNDS PER SQUARE FOOT
PSI	POUNDS PER SQUARE INCH
PSIG	POUNDS PER SQUARE INCH GAUGE
PT	POINT OF TANGENCY
PTC	POSITIVE TRAIN CONTROL
PTD	PAINTED
PTN	PARTITION
PTZ	PAN TILT ZOOM CAMERA
PVC	POINT OF VERTICAL CURVE, POLYVINYL
	CHLORIDE
PVI	POINT OF VERTICAL INTERSECTION
PVM'T., PAVT	PAVEMENT
PVT	POINT OF VERTICAL TANGENT
PWR	POWER LINE
QTY	QUANTITY

ABBREVIATIONS	DESCRIPTIONS
R, RAD	RADIUS
R, RT	RIGHT
R.C.	REINFORCED CONCRETE
R/W, ROW	RIGHT OF WAY
RA	RETURN AIR
RB	RESILIENT BASE
RC	REVERSE CURVE, REINFORCED CONCRETE
RCP	REINFORCED CONCRETE PIPE
RD	ROAD, ROUND, ROOF DRAIN
RDWY	ROADWAY
RE	AREA SECTION
REF	REFERENCE
REFL	REFLECTED
REFRIG.	REFRIGERANT
REINF.	REINFORCE(D)(ING)
REQ.	REQUIRE
REQD.REV	REQUIRED
RET	RETAINING
REV	REVIEWED, REVISION
RF	ROOF
RGS	RIGID GALVANIZED STEEL
RH	RIGHT HAND
RL	RAIN LEADER
RL, RWL	RAINWATER LEADER
RMES	REDUNDANT MANAGED ETHERNET SWITCH
RO	ROUGH OPENING
RPM	REVOLUTIONS PER MINUTE
RPU	REMOTE PROGRAMMABLE UNIT CONTROLLER
RR, R/R	RAILROAD
RS/L	REFRIGERANT SUCTION & LIQUID LINES
RU	RACK UNIT
RW	RETAINING WALL
RX	RECEIVE
S	SOUTH, SANITARY SEWER, SPEAKER
S&I	SERVICE AND INSPECTION
S.E.	SLAB EDGE
S.J.	SAWCUT JOIST
S.P.	SOUTHERN PINE
S.P.F.	SPRUCE PINE FIRE
S.W.	SHEAR WALL
S/H	STROBE/HORN DEVICE
SA	SUPPLY AIR
SAN	SANITARY
SC	SEAL COAT, SPIRAL TO CURVE, FIBER OPTIC
	SC CONNECTOR
SCFM	STANDARD CUBIC FEET PER MINUTE
SCHED	SCHEDULE
SCT	SCATTERED
SD	SCUPPER DRAIN
SDT	STATIC DISSIPATIVE CARPET TILE
SECT	SECTION
SF	SQUARE FOOT, SQUARE FEET,STEP FOOTING
SGN	SIGN
SHLDR	SHOULDER
SHP	SHARED POLE

ABBREVIATIONS	DESCRIPTIONS
SHT	SHEET
SHWT	SEASONAL HIGH WATER TABLE
SIG	SIGNAL
SIM	SIMILAR
SJ	SLAB CONTROL JOINT
SJI	STEEL JOIST INSTITUTE
SL	SLOPE
SM	SINGLE MODE, SURFACE MOUNTED
SMF	SINGLE MODE FIBER
SN	SECTION MODULUS (NEGATIVE BENDING)
SP	SECTION MODULUS (POSITIVE BENDING),
	SEWER PIPE, STATIC PRESSURE,SPACING,
	SUPERPAVE
SPA.	SPACE(S)
SPD	SURGE PROTECTION DEVICE
SPEC	SPECIFICATION
SPECS	SPECIFICATIONS
SPH	SPRINKLER HEAD
SPL	SPILLWAY
SPT	STANDARD PENETRATION TEST
SQ	SQUARE
SQ. IN.	SQUARE INCH
SQ/YD	SQUARE YARD
SR	STATE ROAD
SRAP	SPIRAL RIB ALUMINUM PIPE
SRASP	SPIRAL RIB ALUMINIZED STEEL PIPE
SRF	SPLIT RAIL FENCE
SRM	STANDARD ROUTE MARKERS
SS	SANITARY SEWER, STAINLESS STEEL,
	STORM SEWER
SSPC	SOCIETY FOR PROTECTIVE COATINGS,
	STEEL STRUCTURES PAINTING COUNCIL
SSS	SIGN, SINGLE SUPPORT
SSTA	SUBSTATION
ST	STORM PIPE, FIBER OPTIC CONNECTOR,
	SOIL TIGHT, SPIRAL TO TANGENT, STREET,
	STRAND, SURFACE TREATMENT
STA	STATION
STD	STANDARD
STGE., STO	STORAGE
STL	STEEL
STR	STREET
STR., STRC, STRUCT.	STRUCTURE, STRENGTH
STRL, STRUC	STRUCTURAL
STTX	STORAGE TANK
STWY	STAIRWAY
STY	STORY
SUC.	SUCTION
SUPER.	SUPERVISOR
SW, SWK	SIDEWALK
SWF	STOCK WIRE FENCE
SWP	SWAMP
SYM.	SYMMETRICAL
SYS	SYSTEM
T	TANGENT

NOTICE: THE OFFICIAL RECORD OF THIS SHEET IS THE ELECTRONIC FILE SIGNED AND SEALED UNDER RULE 61G15-23.003, F.A.C.

REVISIONS

DATE	BY	DESCRIPTION	DATE	BY	DESCRIPTION

TRANSPORTATION
AECOM TECHNICAL SERVICES, Inc.
300 Colonial Center Pkwy, Suite 130
Lake Mary, FL. 32746
T 407.549.4200 F 407.549.4201
Certificate of Authorization No. 8115
DAVID S. BURWELL PE NO. 55853 www.aecom.com

STATE OF FLORIDA
DEPARTMENT OF TRANSPORTATION

ROAD NO.	COUNTY	FINANCIAL PROJECT ID
CFRC P2S	VARIOUS	423446-9-52-01

CENTRAL FLORIDA COMMUTER RAIL TRANSIT (CFCRT) PHASE 2 SOUTH

ABBREVIATIONS

SHEET NO. 45

PrinceK 5/22/2015 6:22:22 PM Q:\423469520\roadway\C00-006 - Abbreviations.dgn

ABBREVIATIONS	DESCRIPTIONS
T&B	TOP & BOTTOM
T.B.	TIE BEAM
T.O., T/	TOP OF
T/A, TAI	TEMP/ALARM INTERFACE
T/R	TOP OF RAIL
TAS	TESTING APPLICATION STANDARD
TB	TERMINAL BLOCK
TBD	TO BE DETERMINED
TDS	TURN DOWN SLAB
TEL.	TELEPHONE
TELB	TELEPHONE BOOTH
TEMP.	TEMPORARY, TEMPERATURE
TF	TRACK FEET
THD	THREADED
THK	THICK
THNS	THICKEN SLAB
THW	THERMOPLASTIC HEAT AND MOISTURE
	RESISTANT WIRE
TK	TANK
TN	TON
TNPK	TURNPIKE
TO	TURNOUT
TOP'G	TOPPING
TOPO	TOPOGRAPHIC
TOS	TOP OF STEEL
TOW	TOP OF WALL
TP	TWISTED PAIR
TRAF	TRAFFIC
TRANS.	TRANSFER, TRANSVERSE
TRN	RETURN
TRNF	TRANSFORMER
TS	TANGENT TO SPRIAL POINT
TSP	TECHNICAL SPECIAL PROVISIONS, TOTAL
	STATIC PRESSURE
TTL	TRANSISTOR-TRANSISTOR LOGIC
TV	TELEVISION
TVM	TICKET VENDING MACHINE
TVU	TICKET VALIDATOR UNIT
TW	THERMOPLASTIC MOISTURE RESISTANT WIRE
TX	TRANSMIT
TYP.	TYPICAL
U.S.	UNITED STATES
UG	UNDERGROUND
UL	UNDERWRITER'S LABORATORIES
UNK	UNKNOWN
UNO	UNLESS NOTED OTHERWISE
UP	UTILITY POLE
UPS	UNINTERRUPTIBLE POWER SUPPLY
UTIL	UTILITIES
UV	ULTRAVIOLET
V	SPEED, VOLTS
V.C.	VERTICAL CURVE
V/PH	VOLTS/PHASE
VAC	VOLTS ALTERNATING CURRENT

ABBREVIATIONS	DESCRIPTIONS
VALC	VALVE COVER
VB	VALVE BOX
VC	VITRIFIED CLAY
VCS	VALVE COVER, SEWER
VCT	VINYL COMPOSITION TILE
VCW	VALVE COVER, WATER
VERT	VERTICAL
VH	VERIFIED HORIZONTAL LOCATION
VHF	VERY HIGH FREQUENCY
VLV	VALVE
VMS	VARIABLE MESSAGE SIGN
VMX	VIRTUAL MATRIX
VNT	VENT
VOIP	VOICE OVER INTERNET PROTOCOL
VRF	VARIABLE REFRIGERANT FLOW
VS	VERSUS
VSLMF	VEHICLE STORAGE AND LIGHT MAINTENANCE
	FACILITY
VV	VERIFIED VERTICAL ELEVATION
VVH	VERIFIED VERTICAL ELEVATION AND
	HORIZONTAL LOCATION
W	WATER, WEST, WIDTH
W.E.	WATER ELEVATION
W.F.	WALL FOOTING, WIDE FLANGE
W.O.	WINDOW OPENING (MASONRY)
W.P.	WORKING POINT
W/	WITH
W/O	WITHOUT
WD	WOOD
WEDG	WATERS EDGE
WL	WATER LINE
WM	WATER MAIN
WP	WATERPROOF
WS	WATERSTOP
WSEL	WATER SURFACE ELEVATION
WT	WEIGHT
WV	WATER VALVE
WVC	WATER VALVE COVER
WWF	WELDED WIRE FABRIC
X-CUT	CROSS CUT
YD	YARD DRAIN
YR.	YEAR

DRAWING NO.
C00.006E

NOTICE: THE OFFICIAL RECORD OF THIS SHEET IS THE ELECTRONIC FILE SIGNED AND SEALED UNDER RULE 61G15-23.003, F.A.C.

REVISIONS

DATE	BY	DESCRIPTION	DATE	BY	DESCRIPTION

TRANSPORTATION
AECOM TECHNICAL SERVICES, Inc.
300 Colonial Center Pkwy, Suite 130
Lake Mary, FL. 32746
T 407.549.4200 F 407.549.4201
Certificate of Authorization No. 8115
DAVID S. BURWELL PE NO. 55853 www.aecom.com

STATE OF FLORIDA
DEPARTMENT OF TRANSPORTATION

ROAD NO.	COUNTY	FINANCIAL PROJECT ID
CFRC P2S	VARIOUS	423446-9-52-01

CENTRAL FLORIDA COMMUTER RAIL TRANSIT (CFCRT) PHASE 2 SOUTH

ABBREVIATIONS

SHEET NO. 46

PROJECT SYMBOLS

ARCHITECTURAL SYMBOLS

NORTH ARROWS

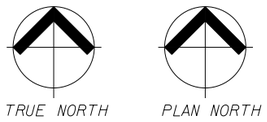

DETAIL REFERENCE

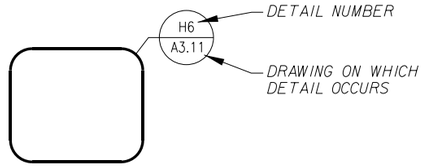

WALL SECTION OR BUILDING SECTION REFERENCE

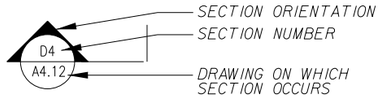

DETAIL REFERENCE

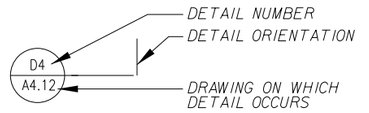

INTERIOR ELEVATION REFERENCE

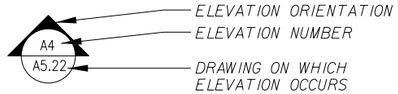

IDENTIFICATION COLUMN

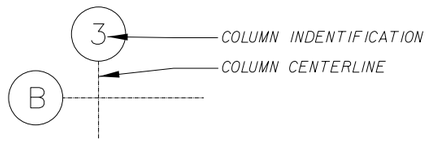

DRAWING IDENTIFICATION

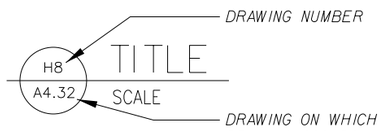

REVISION IDENTIFICATION



LEGEND NOTES REFERENCE

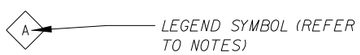

PARTITION TYPE IDENTIFICATION



DETAIL / SECTION ELEVATION TARGET



FLOOR PLAN ELEVATION TARGET



STRUCTURAL SYMBOLS

SECTION CUT ON PLANS

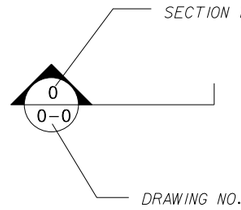

SECTION MARK ON DETAILS

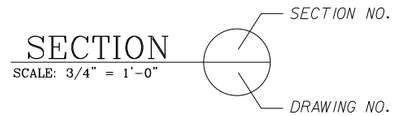

FOOTING MARK ON PLANS

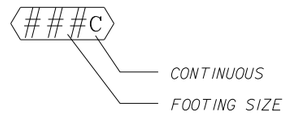

ELEVATION MARK ON PLANS



NORTH ARROW



FILLED CELLS ON PLANS AND DETAILS ■

SPAN DIRECTION

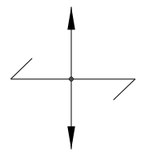

TARGET ON PLAN AND DETAILS



STEP



MOMENT CONNECTION



REVISION MARK



ELECTRICAL SYMBOLS

GFI RECEPTACLE. WP DENOTES WEATHERPROOF COVER.



FLUSH FLOOR OUTLET BOX WITH LOCABLE COVER AND DUPLEX RECEPTACLE WITH APPROPRIATE FLANGE. WP DENOTES WEATHERPOOF



JUNCTION BOX. WP DENOTES WEATHERPROOF



LIGHT POLE ON STATIONS AND/OR PEDESTRIAN AREAS



LIGHT POLE FOR PARKING LOTS (1 HEAD)



LIGHT POLE FOR PARKING LOTS (2 HEADS)

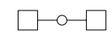

SPEAKER



EMERGENCY LIGHT FIXTURE WITH INTEGRAL BATTERY BALLAST

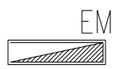

UNDER CANOPY LIGHT FIXTURE



UNDER CANOPY LIGHT FIXTURE



EXISTING CONDUIT

NEW CONDUIT

CIRCUIT HOMERUN. NUMBER OF ARROWHEADS DENOTES NUMBER OF CIRCUITS. PLAN DESIGNATION IS ADJACENT TO ARROWHEAD. SEE CONNECTION SCHEDULE



SURGE SUPPRESSOR
C3 = SERVICE ENTRANCE DEVICE



GROUND



SINGLE POLE SWITCH
(SUBSCRIPT INDICATES ITEM CONTROLLED)



THREE-WAY SWITCH



SINGLE POLE SWITCH WITH WEATHERPROOF COVER



DUPLEX RECEPTACLE

DRAWING NO.
C00.007A

NOTICE: THE OFFICIAL RECORD OF THIS SHEET IS THE ELECTRONIC FILE SIGNED AND SEALED UNDER RULE 61G15-23.003, F.A.C.

REVISIONS					
DATE	BY	DESCRIPTION	DATE	BY	DESCRIPTION

TRANSPORTATION
AECOM TECHNICAL SERVICES, Inc.
300 Colonial Center Pkwy, Suite 130
Lake Mary, FL. 32746
T 407.549.4200 F 407.549.4201
Certificate of Authorization No. 8115
DAVID S. BURWELL PE NO. 55853 www.aecom.com

STATE OF FLORIDA
DEPARTMENT OF TRANSPORTATION

ROAD NO.	COUNTY	FINANCIAL PROJECT ID
CFRC P2S	VARIOUS	423446-9-52-01

CENTRAL FLORIDA COMMUTER RAIL TRANSIT (CFCRT) PHASE 2 SOUTH

PROJECT SYMBOLS

SHEET NO. 47

DRAWING NO.
C00.007B

ELECTRICAL SYMBOLS

DUPLEX RECEPTACLE MOUNTED ABOVE COUNTER

GFI RECEPTACLE MOUNTED ABOVE COUNTER

TWO DUPLEX RECEPTACLES WITH COMMON COVER

SPECIAL PURPOSE RECEPTACLE, RATING AS NOTED — WP

JUNCTION BOX — J

NON-FUSED DISCONNECT SWITCH, SIZE & # OF POLES
NF DENOTES NON-FUSED
AR DENOTES AMP RATING OF SWITCH — 30AR / NF

FUSED DISCONNECT
AR DENOTES AMP RATING OF SWITCH
AF DENOTES AMP FUSE SIZE — 30AR / 20AF

BRANCH CIRCUIT PANELBOARD, UNDER 250 VOLTS, SURFACE MOUNTED

BRANCH CIRCUIT PANELBOARD, OVER 250 VOLTS, SURFACE MOUNTED

BRANCH CIRCUIT CONDUIT CONCEALED ABOVE CEILING OR IN WALL. CONDUIT SHALL INCLUDE PHASE, NEUTRAL AND GROUND CONDUCTORS AS REQUIRED FOR CIRCUITS (UNLESS OTHERWISE NOTED).

BRANCH CIRCUIT CONDUIT CONCEALED IN SLAB, UNDERGROUND OR UNDER FLOOR.

BRANCH CIRCUIT CONDUIT EXPOSED

GROUND OR GROUND ROD AS NOTED

CONDUIT TURNING UP — UP

CONDUIT TURNING DOWN — DN

CONDUIT STUB

CONDUIT CONTINUED

FLUORESCENT STRIP FIXTURE

FIXTURE DESIGNATION — A

FLUORESCENT FIXTURE

CIRCUIT NUMBER — 2

LOWER CASE LETTER INDICATES CONTROL CIRCUIT SWITCH LEG — a

FLUORESCENT FIXTURE
DIAGONAL SHADING DENOTES EMERGENCY LIGHT FIXTURE.

HID, FLUORESCENT, LED OR INCANDESCENT FIXTURE

EXIT LIGHT FIXTURE
DIRECTION ARROWS AS SHOWN
(SHADED QUADRANT INDICATES FACE(S) OF FIXTURE)

WALL MOUNTED EXIT LIGHT FIXTURE

BATTERY PACK WITH TWIN HEADS

COMMUNICATIONS "INFORMATION OUTLET" MTD. AT RECEPTACLE HEIGHT UNLESS OTHERWISE NOTED.
C = ABOVE THE COUNTER

TELEPHONE/COMPUTER TERMINAL BOARD — TTB

TELEVISION SIGNAL WALL OUTLET — TV

CCTV CAMERA W/ CONDUIT TO VIDEO JUNCTION BOX — CAM

CARD READER — CR

TRANSFORMER — 4" / 5'-6" / 5" / T

FLUORESCENT STRIP FIXTURE

NOTICE: THE OFFICIAL RECORD OF THIS SHEET IS THE ELECTRONIC FILE SIGNED AND SEALED UNDER RULE 61G15-23.003, F.A.C.

REVISIONS					
DATE	BY	DESCRIPTION	DATE	BY	DESCRIPTION

TRANSPORTATION
AECOM TECHNICAL SERVICES, Inc.
300 Colonial Center Pkwy, Suite 130
Lake Mary, FL. 32746
T 407.549.4200 F 407.549.4201
Certificate of Authorization No. 8115
DAVID S. BURWELL PE NO. 55853 www.aecom.com

STATE OF FLORIDA
DEPARTMENT OF TRANSPORTATION

ROAD NO.	COUNTY	FINANCIAL PROJECT ID
CFRC P2S	VARIOUS	423446-9-52-01

CENTRAL FLORIDA COMMUTER RAIL TRANSIT (CFCRT) PHASE 2 SOUTH

PROJECT SYMBOLS

SHEET NO. 48

DRAWING NO.
C00.007C

PLUMBING SYMBOLS

- DOMESTIC COLD WATER (ABOVE GROUND)
- DOMESTIC COLD WATER (UNDERGROUND)
- SANITARY — S —
- SANITARY VENT — V —
- STORM DRAIN — ST —
- COMPRESSED AIR — CA —
- SHUTOFF VALVE
- SHUTOFF VALVE IN VALVE BOX
- ELBOW, TURNED DOWN
- ELBOW, TURNED UP
- TEE, TURNED UP
- TEE, TURNED DOWN
- FLOOR DRAIN
- PLUMBING FIXTURE/EQUIPMENT TAG — FD-1
- WALL CLEANOUT — WCO
- CLEANOUT TO GRADE — COTG
- FLOOR CLEANOUT — FCO
- WALL HYDRANT

TRACK SYMBOLS

- TURNOUT

COMMUNICATION SYMBOLS

- 96-STRAND FIBER
- FUTURE FIBER
- FDOT RADIO
- FDOT RENDUNDANT FIBER LOOP
- UNDERGROUND CONDUIT
- RADIO BASE - TYPICAL
- STATION
- FIBER TERMINATION
- VARIABLE MESSAGE SIGN DUAL DISPLAY (ELECTRONICS DETAILS) — VMS
- VARIABLE MESSAGE SIGN DUAL DISPLAY (CEILING PLANS)
- EMERGENCY CALL BOX — ECB
- PULL BOX — PB
- PASSENGER ASSISTANCE TELEPHONE — PAT
- PA SPEAKER (ELECTRONICS DETAILS) — PA
- PA SPEAKER (CEILING PLANS) — S
- PAN/TILT/ZOOM CCTV CAMERA (ELECTRONICS DETAILS) — PTZ
- PAN/TILT/ZOOM CCTV CAMERA (CEILING PLANS) — C
- AMBIENT NOISE SENSOR — A
- ALARM TEMPERATURE SENSOR
- NORMALLY CLOSED / NORMALLY OPEN CIRCUIT
- NORTH ARROW — 1" = 20'
- SINGLE FIBER OPTIC SC CONNECTOR
- DOUBLE FIBER OPTIC SC CONNECTOR
- RJ CONNECTOR
- OPERATIONS CONTROL CENTER
- DETAIL IDENTIFIER
  # - DETAIL NUMBER
  Mxx.xxx- DRAWING NUMBER — # / Mxx.xxx
- QUAD RECEPTICAL
- SERVER

- SERVER ARRAY
- AUDIO RECORDER
- CONDUIT ID — XX-##
  XX = DA - DATA
  XX = AC - POWER
  XX = FO - FIBER OPTIC
  ## - CIRCUIT NUMBER
- NETWORK PROCESSOR AMS & NVR
- WORKSTATION
- FIREWALL ROUTER
- MULTIPULE WORKSTATIONS
- ETHERNET SWITCH - ES
  MANAGED ETHERNET SWITCH - MES
- VIDEO WALL
- STROBE/HORN DEVICE — S/H
- CARD READER (G INDICATES GATE ACCESS CONTROL DEVICE) — CR G
- FIBER
- SINGLE FIBER OPTIC SC CONNECTOR
- JUNCTION BOX — J
- CCTV CAMERA

NOTICE: THE OFFICIAL RECORD OF THIS SHEET IS THE ELECTRONIC FILE SIGNED AND SEALED UNDER RULE 61G15-23.003, F.A.C.

REVISIONS

DATE	BY	DESCRIPTION	DATE	BY	DESCRIPTION

TRANSPORTATION
AECOM TECHNICAL SERVICES, Inc.
300 Colonial Center Pkwy, Suite 130
Lake Mary, FL. 32746
T 407.549.4200 F 407.549.4201
Certificate of Authorization No. 8115
DAVID S. BURWELL PE NO. 55853 www.aecom.com

STATE OF FLORIDA
DEPARTMENT OF TRANSPORTATION

ROAD NO.	COUNTY	FINANCIAL PROJECT ID
CFRC P2S	VARIOUS	423446-9-52-01

CENTRAL FLORIDA COMMUTER RAIL TRANSIT (CFCRT) PHASE 2 SOUTH

PROJECT SYMBOLS

SHEET NO. 49

DRAWING NO.
C00.002A

GENERAL NOTES

1. BENCHMARK ELEVATIONS SHOWN ON THE PLANS ARE NORTH AMERICAN VERTICAL DATUM OF 1988 (NAVD 88).

2. ANY PUBLIC LAND CORNER OR BENCHMARK WITHIN THE LIMITS OF CONSTRUCTION SHALL BE PROTECTED. IF A CORNER MONUMENT IS IN DANGER OF BEING DISTURBED OR DESTROYED, AND HAS NOT BEEN PROPERLY REFERENCED, THE ENGINEER SHALL NOTIFY THE DISTRICT LOCATION SURVEYOR WITHOUT DELAY.

3. CONSTRUCTION SHALL BE IN COMPLIANCE WITH 2010 ADA STANDARDS FOR ACCESSIBLE DESIGN, TITLE II. CONTRACTOR SHALL BE FAMILIAR WITH TOLERANCES ALLOWED BY ADAAG AND ENSURE WORK DONE FALLS WITHIN THESE TOLERANCES.

4. ALL PIPE JOINTS ARE TO BE WRAPPED IN ACCORDANCE WITH INDEX NO. 280 AND SPECIFICATION 430 WITH A FILTER FABRIC JACKET MEETING THE REQUIREMENTS OF INDEX NO. 199, TYPE D-3 WITH AN A.O.S. EQUAL TO OR GREATER THAN 70. THE COST OF THE FABRIC SHALL BE INCLUDED IN THE COST OF THE PIPE.

5. EXISTING DRAINAGE STRUCTURES WITHIN CONSTRUCTION LIMITS SHALL REMAIN UNLESS OTHERWISE NOTED.

6. THE CONTRACTOR SHALL PROVIDE A DEWATERING SYSTEM AS NECESSARY DEPENDING ON GROUNDWATER LEVELS AT THE TIME OF CONSTRUCTION. THE DEWATERING SYSTEM SHALL MAINTAIN GROUNDWATER LEVELS AT LEAST 2 FEET BELOW PROOF ROLLED AND COMPACTION SURFACES, INCLUDING THE BOTTOM OF EXCAVATIONS. THE CONTRACTOR SHALL PROVIDE POSITIVE SITE DRAINAGE DURING SITE PREPARATION AND FILL PLACEMENT. SURFACE RUNOFF SHALL NOT BE ALLOWED TO ACCUMULATE.

7. ALL AREAS DISTURBED BY CONSTRUCTION SHALL BE SODDED UNLESS OTHERWISE INDICATED IN THE PLANS.

8. EXISTING DRIVEWAYS WITHIN THE LIMITS OF THIS PROJECT ARE TO BE REPLACED AT THE SAME LOCATION AND WIDTH, UNLESS OTHERWISE SHOWN IN THE PLANS.

9. TRAFFIC TO BE MAINTAINED IN ACCORDANCE WITH THE FDOT DESIGN STANDARDS, INDEX 600 SERIES. SPECIAL ATTENTION SHALL BE MADE TO LANE CLOSURE RESTRICTION TIMES.

10. PAY ITEM NUMBERS ARE PROVIDED ONLY FOR THE PURPOSE OF DESCRIBING THE WORK TO BE PERFORMED. PAY ITEM DESCRIPTIONS ARE FOUND IN THE DEPARTMENT'S BASIS OF ESTIMATES HANDBOOK.

11. CONTRACTOR SHALL CONFIRM EXACT MESSAGES OF ALL GRAPHIC STATION SIGNAGE WITH THE ENGINEER PRIOR TO MANUFACTURING SIGNS.

12. ALL TYPE "B" FENCING SHALL BE BLACK VINYL COATED UNLESS OTHERWISE INDICATED IN THE PLANS.

13. THE CONTRACTOR SHALL ENGAGE A SURVEYOR LICENSED IN THE STATE OF FLORIDA TO ESTABLISH THE LOCATION OF THE TRACK AND PLATFORM AS PARALLEL THROUGH STATION AREAS AT THE LOCATION AND ELEVATIONS SHOWN IN THE PLANS. ALL PLATFORM FORM WORK SHALL BE INDEPENDENTLY VERIFIED AND CERTIFIED BY THE ENGINEER PRIOR TO PLACING CONCRETE. ANY DEVIATION FROM THE LOCATION OR ELEVATIONS SHOWN IN THE PLANS SHALL BE BROUGHT TO THE ENGINEERS ATTENTION IMMEDIATELY. ALL WORK NECESSARY TO CORRECT DEVIATIONS IN LOCATION OR ELEVATION SHALL BE MADE BY THE CONTRACTOR AT NO ADDITIONAL COST TO THE DEPARTMENT.

SIGNING AND PAVEMENT MARKING GENERAL NOTES

1. ALL EXISTING SIGNS ARE TO REMAIN UNLESS OTHERWISE NOTED.

2. THE LOCATION OF THE SIGNS SHOWN IN THE PLANS ARE APPROXIMATE. THE ENGINEER MAY REQUIRE THE CONTRACTOR TO FIELD ADJUST THE LOCATION OF ANY SIGN TO ENSURE PROPER VISIBILITY.

3. SIGN ASSEMBLY LOCATIONS SHOWN ON PLANS WHICH ARE IN CONFLICT WITH UTILITIES, ETC., MAY BE ADJUSTED SLIGHTLY AS DIRECTED BY THE ENGINEER.

4. MATCH EXISTING PAVEMENT MARKINGS AT THE BEGINNING AND AT THE END OF PROJECT AND AT ALL SIDE STREETS.

5. THE CONTRACTOR IS TO MAINTAIN VISIBILITY OF EXISTING STREET NAME IDENTIFICATION SIGNS DURING CONSTRUCTION.

6. ALL PAVEMENT MARKINGS WITHIN THE FDOT RIGHT OF WAY OF STATE ROADWAYS SHALL BE THERMOPLASTIC PAVEMENT MARKINGS UNLESS OTHERWISE INDICATED IN THE PLANS. ALL PAVEMENT MARKINGS OUTSIDE THE FDOT RIGHT OF WAY OF STATE ROADWAYS ARE TO BE PAINT PAVEMENT MARKINGS UNLESS OTHERWISE INDICATED IN THE PLANS.

7. ALL REMOVED SIGNS BECOME THE PROPERTY OF THE CONTRACTOR TO BE DISPOSED OF PROPERLY UNLESS OTHERWISE NOTED IN THESE PLANS.

8. IT IS THE CONTRACTOR'S RESPONSIBILITY TO REMOVE AND REPLACE ALL EXISTING SIGNS OR PAVEMENT MARKINGS THAT CONFLICT WITH CONSTRUCTION OPERATIONS. IF SIGNS OR PAVEMENT MARKINGS ARE DAMAGED BY THE CONTRACTOR, AS DETERMINED BY THE ENGINEER, THE SIGNS OR PAVEMENT MARKINGS SHALL BE REPLACED AT THE CONTRACTOR'S EXPENSE.

9. THE CONTRACTOR SHALL REMOVE EXISTING PAVEMENT MARKINGS THAT ARE IDENTIFIED IN THE PLANS TO BE REMOVED BY A METHOD ACCEPTABLE TO THE ENGINEER.

NOTICE: THE OFFICIAL RECORD OF THIS SHEET IS THE ELECTRONIC FILE SIGNED AND SEALED UNDER RULE 61G15-23.003, F.A.C.

REVISIONS					
DATE	BY	DESCRIPTION	DATE	BY	DESCRIPTION

TRANSPORTATION
AECOM TECHNICAL SERVICES, Inc.
300 Colonial Center Pkwy, Suite 130
Lake Mary, FL. 32746
T 407.549.4200 F 407.549.4201
Certificate of Authorization No. 8115
DAVID S. BURWELL PE NO. 55853 www.aecom.com

STATE OF FLORIDA
DEPARTMENT OF TRANSPORTATION

ROAD NO.	COUNTY	FINANCIAL PROJECT ID
CFRC P2S	VARIOUS	423446-9-52-01

CENTRAL FLORIDA COMMUTER RAIL TRANSIT (CFCRT) PHASE 2 SOUTH

CIVIL GENERAL NOTES

SHEET NO.
52

PrinceK 5/26/2015 4:33:26 PM Q:\423446952O1\roadway\C00-002 - Gen Notes.dgn

DRAWING NO.
C00.002B

UTILITY GENERAL NOTES

1. THE LOCATION(S) OF THE UTILITIES SHOWN IN THE PLANS (INCLUDING THOSE DESIGNATED VV, VH AND VVH) ARE BASED ON LIMITED INVESTIGATION TECHNIQUES AND SHOULD BE CONSIDERED APPROXIMATE ONLY. THE VERIFIED LOCATIONS/ELEVATIONS APPLY ONLY AT THE POINTS SHOWN. INTERPOLATIONS BETWEEN THESE POINTS HAVE NOT BEEN VERIFIED.
2. EXISTING UTILITIES ARE TO REMAIN IN PLACE UNLESS OTHERWISE NOTED.
3. THE CONTRACTOR SHALL NOTIFY ALL UTILITY OWNERS THROUGH SUNSHINE ONE CALL OF FLORIDA, INC. AT 1-800-432-4770 AND THE UTILITY OWNERS ON THESE SHEETS A MINIMUM OF 48 HOURS IN ADVANCE OF CONSTRUCTION AT THE PROJECT SITE.
4. CONTRACTOR IS RESPONSIBLE FOR ANY AND ALL FEES REQUIRED TO ESTABLISH UTILITY SERVICE TO THE PROJECT SITE. CONTRACTOR SHALL COORDINATE WITH THE RESPECTIVE UTILITY PROVIDERS AS NEEDED.
5. UTILITY INFORMATION SHOWN IN THE PLANS AS 'NOT VERIFIED' IS OBTAINED FROM GREENLINE DATA SUPPLIED BY THE UAO AND IS NOT A SURVEY.
6. FOR RAILROAD SIGNAL LOCATES PLEASE CONTACT CFRC AT 407-461-8926.

WATER SYSTEM NOTES

1. A MINIMUM VERTICAL CLEARANCE OF 12 INCHES SHALL BE MAINTAINED BETWEEN SANITARY SEWERS AND WATER MAINS. ADJUST WATER MAINS OVER OR UNDER THE SANITARY SEWER.
2. A MINIMUM HORIZONTAL SEPARATION OF 6 FEET SHALL BE MAINTAINED BETWEEN WATER MAINS AND GRAVITY SANITARY SEWER. A MINIMUM HORIZONTAL SEPARATION OF 3 FEET SHALL BE MAINTAINED BETWEEN WATER MAINS AND SANITARY FORCE MAINS.
3. CONFLICTS BETWEEN WATER AND STORM OR GRAVITY SANITARY SEWER TO BE RESOLVED BY ADJUSTING THE WATER LINES AS NECESSARY. NO WATER PIPE SHALL PASS THROUGH OR COME IN CONTACT WITH ANY PART OF A SANITARY OR STORM WATER MANHOLE OR STRUCTURE.
4. CONTRACTOR TO INSTALL TEMPORARY BLOW-OFFS AT THE END OF WATER SERVICE LATERALS TO ASSURE ADEQUATE FLUSHING AND DISINFECTION.
5. THRUST BLOCKING AND/OR RESTRAINED JOINTS SHALL BE PROVED AT ALL FITTINGS AND HYDRANTS IN ACCORDANCE WITH LOCAL REGULATORY AGENCY AND/OR AWWA STANDARDS.
6. ALL COMPONENTS OF THE WATER SYSTEM, INCLUDE FITTINGS, HYDRANTS, CONNECTIONS, AND VALVES SHALL REMAIN UNCOVERED UNTIL PROPERLY PRESSURE TESTED AND ACCEPTED BY THE OWNER'S ENGINEER. PRESSURE TESTS TO BE IN ACCORDANCE WITH LOCAL REGULATORY AGENCY AND/OR AWWA SPECIFICATIONS. CONTRACTOR TO NOTIFY THE ENGINEER 48 HOURS IN ADVANCE OF PERFORMING TESTS.
7. CONTRACTOR TO PERFORM CHLORINATION AND BACTERIOLOGICAL SAMPLING REQUIRED TO OBTAIN CLEARANCE OF DOMESTIC WATER SYSTEM THROUGH LOCAL REGULATORY AGENCIES. COPIES OF ALL BACTERIOLOGICAL TESTS TO BE SUBMITTED TO THE ENGINEER.
8. CONTRACTOR SHALL OBTAIN WATER SYSTEM DETAILS FROM THE UTILITY PROVIDER. CONTRACTOR IS RESPONSIBLE FOR ALL FEES ASSOCIATED WITH W.M. CONNECTIONS, METERS, INSPECTIONS, BACK FLOW PREVENTERS AND ALL OTHER APPERTENANCES FOR THE W.M.
9. UNLESS OTHERWISE SHOWN IN THE PLANS, WATER SERVICE LINES PASSING UNDER PAVED OR OTHER IMPERVIOUS SURFACES SHALL BE INSTALLED IN SLEEVING OF ADEQUATE SIZE AND STRENGTH. CASINGS SHALL EXTEND AT LEAST FIVE (5) FEET BEYOND THE EDGE OF ROADWAY, SIDEWALK, ETC. OR TO THE LENGTHS SHOWN IN THE PLANS, WHICHEVER IS GREATER. FOR CONDUIT UNDER RAIL REFER TO REQUIREMENTS OF FDOT STANDARD INDEX 280 FOR CASING LENGTH.

MAINLINE AND CROSSING CONTACTS

COMPANY:	TELEPHONE NUMBER:
AT&T FLORIDA	407-380-0938
FPL FIBERNET	305-552-2931
AT&T CORP.	813-342-0512
BRIGHT HOUSE NETWORKS	407-532-8509
LEVEL (3) COMMUNICATIONS, LLC	407-859-4071
VERIZON	407-541-2083
TECO PEOPLES GAS	407-420-2678
CENTURYLINK	407-814-5383
COMCAST COMMUNICATIONS	407-849-3610
FLORIDA GAS TRANSMISSION	407-838-7171
KINDER MORGAN/CENTRAL FLORIDA PIPELINE	813-241-1106
KISSIMMEE UTILITY AUTHORITY	407-933-7777 ext. 110
CROWN CASTLE fka NEXG NETWORKS	408-468-5542
ORANGE COUNTY UTILITIES (WATER, WASTEWATER)	407-254-9718
ORLANDO ORANGE COUNTY EXPRESSWAY AUTHORITY (OOCEA)	407-316-3800
OSCEOLA COUNTY TRAFFIC	407-742-0662
ORLANDO UTILITIES COMMISSION (OUC) (ELECTRIC TRANSMISSION)	407-236-9651
ORLANDO UTILITIES COMMISSION (OUC) (WATER)	407-236-9651
DUKE ENERGY (DISTRIBUTION)	407-942-9421
DUKE ENERGY (TRANSMISSION)	813-948-4147
SPRINT	407-422-6670
TAFT WATER ASSOCIATION	407-855-8712
TOHO WATER AUTHORITY (WATER, WASTEWATER, REUSE WATER)	407-944-5000
TOWER CLOUD	727-471-5640
TW TELECOM	407-215-6849

ABBREVIATIONS

FM = FORCE MAIN
DI = DUCTILE IRON
WM = WATER MAIN
RCWM = RECLAIMED WATER MAIN

NOTICE: THE OFFICIAL RECORD OF THIS SHEET IS THE ELECTRONIC FILE SIGNED AND SEALED UNDER RULE 61G15-23.003, F.A.C.

REVISIONS					
DATE	BY	DESCRIPTION	DATE	BY	DESCRIPTION

LOCHRANE ENGINEERING, INC.
201 SOUTH BUMBY AVENUE
ORLANDO, FLORIDA 32803
(407) 896-3317
FOREST W. ADKINS, P.E.
P.E. NUMBER 56003
CERTIFICATE OF AUTHORIZATION NO. 2856

STATE OF FLORIDA
DEPARTMENT OF TRANSPORTATION

ROAD NO.	COUNTY	FINANCIAL PROJECT ID
CFRC P2S	VARIOUS	423446-9-52-01

CENTRAL FLORIDA COMMUTER RAIL TRANSIT (CFCRT) PHASE 2 SOUTH

UTILITY GENERAL NOTES

SHEET NO. 53

DRAWING NO.
C00.002C

MEADOW WOODS STATION CONTACTS

COMPANY:	TELEPHONE NUMBER:
AT&T FLORIDA	407-273-5084
DUKE ENERGY - DISTRIBUTION	407-942-9421
DUKE ENERGY - TRANSMISSION	407-942-9243
KINDER MORGAN/CENTRAL FLORIDA PIPELINE	813-241-1106
ORLANDO UTILITIES COMMISSION WATER	407-434-2560
BRIGHTHOUSE NETWORKS	407-532-8509
LEVEL (3) COMMUNICATIONS, LLC	407-859-4071
COMCAST COMMUNICATIONS	352-315-8527
VERIZON BUSINESS (FORMERLY MCI)	407-541-2083

POINCIANA STATION CONTACTS

COMPANY:	TELEPHONE NUMBER:
TOHO WATER AUTHORITY	407-944-5000
COMCAST COMMUNICATIONS	407-849-3610
DUKE ENERGY - DISTRIBUTION	407-942-9421
CENTURYLINK	407-814-5383
KINDER MORGAN/CENTRAL FLORIDA PIPELINE	813-241-1106
KISSIMMEE UTILITY AUTHORITY	407-933-7777 ext. 110
BRIGHT HOUSE NETWORKS	407-532-8509
TECO PEOPLES GAS	407-420-2678
LEVEL (3) COMMUNICATIONS, LLC	407-859-4071
VERIZON BUSINESS (FORMERLY MCI)	407-541-2083

OSCEOLA PARKWAY STATION CONTACTS

COMPANY:	TELEPHONE NUMBER:
LEVEL (3) COMMUNICATION	407-859-4071
FLORIDA GAS TRANSMISSION CO.	407-838-7171
BRIGHT HOUSE NETWORKS	407-532-8509
CENTURYLINK	407-814-5383
KINDER MORGAN/CENTRAL FLORIDA PIPELINE	813-241-1106
TOHO WATER AUTHORITY	407-944-5000
VERIZON BUSINESS (FORMERLY MCI)	407-541-2083
KISSIMMEE UTILITY AUTHORITY	407-933-7777 ext. 110

KISSIMMEE STATION CONTACTS

COMPANY:	TELEPHONE NUMBER:
AT&T FLORIDA	407-273-5084
FLORIDA GAS TRANSMISSION	407-838-7171
CENTURYLINK	407-814-5383
KINDER MORGAN/CENTRAL FLORIDA PIPELINE	813-241-1106
KISSIMMEE UTILITY AUTHORITY	407-933-7777 ext. 110
TOHO WATER AUTHORITY	407-944-5000
BRIGHT HOUSE NETWORKS	407-532-8509
LEVEL (3) COMMUNICATIONS, LLC	407-859-4071
VERIZON BUSINESS (FORMERLY MCI)	407-541-2083
OSCEOLA COUNTY TRAFFIC	407-742-0662

NOTICE: THE OFFICIAL RECORD OF THIS SHEET IS THE ELECTRONIC FILE SIGNED AND SEALED UNDER RULE 61G15-23.003, F.A.C.

REVISIONS					
DATE	BY	DESCRIPTION	DATE	BY	DESCRIPTION

LOCHRANE ENGINEERING, INC.
201 SOUTH BUMBY AVENUE
ORLANDO, FLORIDA 32803
(407) 896-3317
FOREST W. ADKINS, P.E.
P.E. NUMBER 56003
CERTIFICATE OF AUTHORIZATION NO. 2856

STATE OF FLORIDA
DEPARTMENT OF TRANSPORTATION

ROAD NO.	COUNTY	FINANCIAL PROJECT ID
CFRC P2S	VARIOUS	423446-9-52-01

CENTRAL FLORIDA COMMUTER RAIL TRANSIT (CFCRT) PHASE 2 SOUTH

UTILITY GENERAL NOTES

SHEET NO. 54

OUC NOTES

GENERAL NOTES:

1. IT SHALL BE THE RESPONSIBILITY OF THE CONTRACTOR TO ENSURE THAT ALL REQUIRED PERMITS ARE IN-HAND BEFORE BEGINNING ANY CONSTRUCTION.

2. THE CONTRACTOR SHALL BE RESPONSIBLE FOR LOCATING AND VERIFYING ALL EXISTING UTILITIES PRIOR TO CONSTRUCTION, AND FOR NOTIFYING THE VARIOUS UTILITY COMPANIES TO MAKE THE NECESSARY ARRANGEMENTS FOR ANY RELOCATION, TEMPORARY DISRUPTION OF SERVICE, OR CLARIFICATION OF ACTIVITY REGARDING SAID UTILITY. THE CONTRACTOR SHALL EXERCISE CAUTION WHEN CROSSING AN UNDERGROUND UTILITY, WHETHER SHOWN ON THESE PLANS OR FIELD LOCATED. CONTRACTOR SHALL BE RESPONSIBLE FOR PROTECTING ALL EXISTING STRUCTURES OR UTILITIES FROM CONSTRUCTION OF WATER FACILITIES. CONTRACTOR SHALL COORDINATE ANY NECESSARY ADJUSTMENTS AND COOPERATE WITH THE OWNER. ANY DELAY OR INCONVENIENCE OF THE VARIOUS UTILITIES SHALL BE INCIDENTAL TO THE CONTRACT AND NO EXTRA COMPENSATION WILL BE ALLOWED.

3. ALL CONSTRUCTION OF THE WATER DISTRIBUTION SYSTEM SHALL MEET CURRENT ORLANDO UTILITIES COMMISSION SPECIFICATIONS FOR MATERIAL, INSTALLATION, AND DISINFECTION. ALL MATERIAL AND EQUIPMENT SHALL BE STORED, INSTALLED, AND USED IN ACCORDANCE WITH THE MANUFACTURERS RECOMMENDATIONS. ALL WATER FACILITIES WILL BE IN COMPLIANCE WITH THE CONDITIONS OF FDEP PERMIT FOR THE PROJECT.

4. WATER MAIN SEPARATION FROM SEWER, STORM, AND RECLAIM LINES WILL BE IN COMPLIANCE WITH FDEP GUIDELINES. THE MINIMUM SEPARATION REQUIREMENTS FROM SANITARY FORCE MAINS, AT LEAST A 6' HORIZONTAL AND AN 12" VERTICAL SEPARATION AT CROSSINGS, MUST BE OBSERVED WITH NO STANDARD MITIGATION ALLOWED. A MINIMUM OF 18' SEPARATION FROM BUILDINGS AND STRUCTURES IS REQUIRED. SEE F.A.C. RULE 62-555-314.

5. ALL CONDUIT TO BE A MINIMUM 2' FROM ALL WATER MAINS, AND APPURTENANCES.

6. ALL HYDROSTATIC TESTING SHALL BE IN ACCORDANCE WITH ANSI/AWWA C600 FOR D.I. PIPE AND ANSI/AWWA C605 FOR PVC PIPE.

7. PROVISIONS ARE REQUIRED TO PROTECT EXISTING ACTIVE WATER MAINS FROM BACKFLOW CONTAMINATION DURING FILLING, FLUSHING, TESTING, AND MAINTAINING A PRESSURE IN THE NEW PIPING UNTIL A FDEP LETTER OF CLEARANCE IS OBTAINED.

8. THE DISINFECTION OF WATER MAINS SHALL BE IN COMPLIANCE WITH "RULES OF THE DEPARTMENT OF ENVIRONMENTAL REGULATION - CHAPTER 62-555 "PERMITTING AND CONSTRUCTION OF PUBLIC WATER SYSTEMS." THE PROCEDURE WILL MEET AND EXCEED THE REQUIREMENTS SET FORTH IN ANSI/AWWA STANDARDS C651. CHLORINATION IS A 5 DAY PROCESS, STARTING ON MONDAYS UNLESS APPROVED BY O.U.C.

9. CROSS CONNECTION CONTROL SHALL BE IN ACCORDANCE WITH RULES AND REQUIREMENTS OF THE DEPARTMENT OF ENVIRONMENTAL PROTECTION - CHAPTER 62-555 "PERMITTING AND CONSTRUCTION OF PUBLIC WATER SYSTEMS."

10. BACKFLOW PREVENTERS SHALL BE LOCATED NO MORE THAN 10 FEET FROM POINT OF SERVICE UNLESS PRIOR APPROVAL HAS BEEN RECEIVED FROM OUC CROSS CONNECTION CONTROL DEPT.

11. A PRE-CONSTRUCTION MEETING FOR THE INSTALLATION OF WATER FACILITIES IS REQUIRED. CONTACT: OUC WATER CONSTRUCTION 407-434-2535.

12. ALL TAPS ON ACTIVE WATER MAINS SHALL BE PERFORMED BY AN OUC APPROVED TAPPING CONTRACTOR.

13. ALL OUC OWNED SERVICES ASSEMBLIES SHALL HAVE A MINIMUM OF 10' SEPARATION FROM STRUCTURES AND TREES.

14. THE CONNECTION OF GROUNDING SYSTEMS FOR NEW OR RENOVATION CONSTRUCTION TO OUC WATER SYSTEM FACILITIES IS PROHIBITED.

GENERAL MATERIAL NOTES:

1. MATERIAL USED IN THE CONSTRUCTION OF THE WATER DISTRIBUTION SYSTEM SHALL ADHERE TO THE REQUIREMENTS OUTLINED IN THE OUC WATER DISTRIBUTION'S SPECIFICATION STANDARDS MANUAL. THE FOLLOWING INFORMATION IS TO PROVIDE GENERAL GUIDANCE IN THE PREPARATION OF CONSTRUCTION PLANS AND SPECIFICATIONS, AND IN NO WAY LIMITS OUC'S RIGHTS TO APPROVE OR DISAPPROVE PLANS, SPECIFICATIONS OF INSTALLATIONS. MOST CENTRAL FLORIDA UTILITY SUPPLY COMPANIES HAVE A COPY OF OUC'S SPECIFICATION STANDARDS MANUAL.

2. A. SERVICE MATERIAL FOR AND 1" SHALL INCLUDE SOFT ANNEALED TYPE-K COPPER TUBING.

   B. SERVICE MATERIAL FOR 2" SHORT SIDE SERVICES SHALL INCLUDE 2" CTS TYPE-K HARD COPPER PIPE.

   C. SERVICE MATERIAL FOR 2" LONG SIDE SERVICES SHALL INCLUDE 2" RESTRAINED JOINT (SDR 17/CLASS 250) PVC PIPE (IPS-O.D.).

   D. PVC PIPE MUST BE BLUE IN COLOR OR HAVING CONTINUOUS BLUE MARKINGS TO CONFORM TO AWWA COLORS WITH NSF LOGO FOR POTABLE WATER USE.

3. SERVICE MATERIAL (CORP. STOPS, CURB STOPS, ETC.) FOR 1", AND 2" SERVICES SHALL BE BRASS COMPRESSION FITTINGS IN ACCORDANCE W/AWWA C800. FLARED FITTINGS ARE ACCEPTABLE UNDER CONTROLLED CONDITIONS. AN AWWA (CC) THREADING IS REQUIRED ON ALL 1" CORPORATION STOPS USED WITH DIRECT PIPE TAPPING ON DUCTILE IRON PIPE OR WITH SERVICE CLAMPS ON PVC PIPE. INSTALLATION OF 2" SERVICES REQUIRE SERVICE CLAMPS AND TO ACCOMMODATE 1 1/2" OR 2" METERS, 2" BALL ANGLE METER VALVES (CTS X FLANGE) WITH SLOTTED HOLES ON THE FLANGE FACE ARE REQUIRED. PADLOCK WINGS MUST BE INCLUDED ON EACH CURB STOP OR BALL METER VALVE.

4. ALL VALVE BOXES SHALL BE CAST IRON SLIDING TYPE ONLY.

TOHO NOTES

GENERAL NOTES:

1. APPROVED BACKFLOW PREVENTION IS REQUIRED ON ALL SERVICES.

2. IRRIGATION CONNECTION TO EXISTING POTABLE WATER SERVICES TO BE PURCHASED BY CONTRACTOR, ASSEMBLED AND INSTALLED BY TOHO WATER AUTHORITY. BACKFLOW PREVENTERS SHALL BE INSTALLED MINIMUM OF 12" ABOVE FLOOD PLAIN ("DCV" OR RPZ"). "PVB" MUST BE INSTALLED A MINIMUM OF 12" ABOVE THE HIGHEST OUTLET.

3. THE CONTRACTOR SHALL MAKE FINAL HORIZONTAL AND VERTICAL ADJUSTMENTS TO METER ASSEMBLY AND METER BOX. THE METER ASSEMBLY SHALL BE ADJUSTED TO APPROXIMATELY 7" BELOW FINISH GRADE. THE METER BOX SHALL BE CENTERED OVER METER ASSEMBLY.

4. SINGLE SERVICE METER BOX SHALL BE UNIFORMLY PERPENDICULAR TO THE CURB OR SIDEWALK. DOUBLE SERVICE METER BOXES SHALL BE UNIFORMLY PARALLEL TO THE CURB OR SIDEWALK. TOP OF METER BOX TO BE ADJUSTED FLUSH WITH FINISH GRADE.

5. MAINTAIN A MINIMUM OF 3' CLEARANCE FREE OF ALL PLANTINGS & STRUCTURES AROUND METER BOX.

6. ALL FITTINGS AND STOPS SHALL BE BRASS PACK JOINT TYPE w/CLAMP SCREW RETAINERS.

7. SERVICE SHALL NOT TERMINATE BENEATH PAVEMENT, CURBS SIDEWALKS OR OTHER STRUCTURES.

8. CURB STOPS SHALL BE LOCKING TYPE, STRAIGHT BALL VALVE WITH OUTLET SIZE AND THREADS TO MATCH INTENDED METER.

9. METER COUPLINGS SHALL NOT BE USED.

10. TAPS SHALL BE A MINIMUM 18" FROM JOINTS, SUCCESSIVE TAPS INTO THE WATER MAIN SHOULD BE SPACED A MINIMUM 18".

11. THE SERVICE LINE SHALL BE CONTINUOUS FROM CORPORATION STOP TO CURB STOP OR TEE BRANCH WITH NO FITTINGS IN BETWEEN.

12. ETCH A 3 INCH "W" IN THE CURB. (SEE SPECIFICATION 51.8)

13. WATER MAIN SEPARATION FROM SEWER, STORM, AND RECLAIM LINES WILL BE IN COMPLIANCE WITH FDEP GUIDELINES. THE MINIMUM SEPARATION REQUIREMENTS FROM SANITARY FORCE MAINS, AT LEAST A 6' HORIZONTAL AND AN 12" VERTICAL SEPARATION AT CROSSINGS, MUST BE OBSERVED WITH NO STANDARD MITIGATION ALLOWED. A MINIMUM OF 18' SEPARATION FROM BUILDINGS AND STRUCTURES IS REQUIRED. SEE F.A.C. RULE 62-555-314.

GENERAL MATERIAL NOTES:

1. MATERIALS AND PRODUCTS SHALL CONFORM TO TOHO WATER AUTHORITY UTILITY DEPARTMENT STANDARDS.

2. TUBING SHALL BE SDR-9 POLYETHYLENE CONFORMING TO AWWA C901. TUBING SHALL HAVE A MINIMUM PRESSURE RATING OF 200 PSI AND INCLUDE UV PROTECTION. TUBING SHALL CONFORM TO TOHO WATER AUTHORITY UTILITY DEPARTMENT STANDARDS. TUBING IN RECLAIMED SERVICE SHALL BE PURPLE IN COLOR.

3. CORPORATION STOPS SHALL BE BALL TYPE WITH AWWA TAPER CC THREADS WITH PACK JOINT OUTLET FOR CTS. CORPORATION STOPS SHALL CONFORM TO TOHO WATER AUTHORITY UTILITY DEPARTMENT STANDARDS.

4. SERVICE SADDLES SHALL HAVE NYLON OR EPOXY COATED BODIES WITH 18-8 OR 304 SST DOUBLE STRAPS. SERVICE SADDLES SHALL CONFORM TO TOHO WATER AUTHORITY UTILITY DEPARTMENT STANDARDS.

5. WATER METER AND METER BOX TO BE PROVIDED BY THE LOCAL UTILITY AUTHORITY.

6. VALVE BOXES SHALL BE CONCRETE WITH BOLTED LIDS, VALVE BOXES SHALL CONFORM TO TOHO WATER AUTHORITY UTILITY DEPARTMENT STANDARDS.

7. SERVICE TEES SHALL BE PACK JOINT, TEES SHALL CONFORM TO TOHO WATER AUTHORITY UTILITY DEPARTMENT STANDARDS. REDUCE SIDE OUTLET SIZE AS REQUIRED.

8. ISOLATION VALVES SHALL CONFORM TO TOHO WATER AUTHORITY UTILITY DEPARTMENT STANDARDS WITH OPTIONAL HANDLE.

9. DISINFECT ALL POTABLE WATER LINES BY THE CONTINUOUS FEED METHOD OR BY THE SLUG METHOD IN ACCORDANCE WITH AWWA C651.

NOTICE: THE OFFICIAL RECORD OF THIS SHEET IS THE ELECTRONIC FILE SIGNED AND SEALED UNDER RULE 61G15-23.003, F.A.C.

REVISIONS					
DATE	BY	DESCRIPTION	DATE	BY	DESCRIPTION

WATER
AECOM TECHNICAL SERVICES, Inc.
150 North Orange Ave, Suite 200
Orlando, FL. 32801
T 407.843.6552 F 407.839.1789
Certificate of Authorization No. 8115 www.aecom.com
JOHN RANDOLPH REED PE NO. 73082

STATE OF FLORIDA
DEPARTMENT OF TRANSPORTATION

ROAD NO.	COUNTY	FINANCIAL PROJECT ID
CFRC P2S	VARIOUS	423446-9-52-01

CENTRAL FLORIDA COMMUTER RAIL TRANSIT (CFCRT) PHASE 2 SOUTH

WATER CONNECTION GENERAL NOTES

SHEET NO. 55

DRAWING NO.
C00.002D

LANDSCAPE GENERAL NOTES

1. ALL PLANT BEDS SHALL BE DRESSED WITH 3" LAYER OF EUCALYPTUS MULCH UNLESS NOTED OTHERWISE. PINE STRAW MULCH AT 6" DEPTH SHALL BE UTILIZED AS NOTED ON THE PLANS.

2. CONTRACTOR SHALL VERIFY ALL EXISTING UTILITIES PRIOR TO INSTALLATION.

3. ALL PLANTS SHALL MEET GRADE, SIZE, CONTAINER, AND SPACING PER SPECIFICATIONS. ANY MATERIAL NOT MEETING SPECIFICATIONS SHALL BE REMOVED AND REPLACED AT THE CONTRACTOR'S EXPENSE.

4. CONTRACTOR SHALL BE RESPONSIBLE FOR PROPER PLANT HEALTH IN ON-SITE SOILS. CONTRACTOR SHALL BE RESPONSIBLE FOR WARRANTY OF HEALTH OF PLANTS IN ON-SITE SOILS. IF, DURING DIGGING, CONTRACTOR DISCOVERS WATER-LOGGED, CLAYEY, COMPACTED OR SIMILARLY POORLY DRAINED SOILS, IT SHOULD BE BROUGHT TO THE ATTENTION OF THE ENGINEER FOR REMEDIAL ACTION.

5. CONTRACTOR SHALL PERFORM SOIL TESTS PRIOR TO CONSTRUCTION 1) TO DETERMINE NUTRIENT STATUS AND PH OF SOIL AND 2) TO DETERMINE THE SOIL TEXTURE OF THE TOP 12" OF SOIL, AND THEN AMEND THE SOIL BASED ON THE RESULTS OF THE TEST. (4) TO (5) SAMPLES ARE TO BE TAKEN FROM THE PROJECT SITE. SAMPLES ARE TO BE TESTED BY LOCAL COUNTY EXTENSION OFFICE. AMEND WITH LIME AND SULFUR AS NEEDED TO OBTAIN OPTIMAL SOIL PH FOR PLANT HEALTH.

6. CONTRACTOR SHALL BE RESPONSIBLE FOR FINE GRADING. GRADING SHALL BE SUBJECT TO THE APPROVAL OF THE ENGINEER.

7. SOIL SHALL BE FREE FROM LIME ROCK AND CONSTRUCTION DEBRIS. COMPACTED OR UNSUITABLE SOILS ARE TO BE REPLACED WITH SOIL SUITABLE FOR PLANT GROWTH. DESIRED PARTICLE SIZE DISTRIBUTION IN TOP 12" OF ON-SITE OR REPLACEMENT SOIL:
   - COARSE SAND (0.5-2mm)/MEDIUM SAND (0.25-0.5 mm) AT A MINIMUM OF 60% (BY WEIGHT) OF PARTICLES SHALL FALL WITHIN THIS RANGE(#60 SIEVE);
   - FINE SAND (0.15-0.25mm) AT A MAXIMUM OF 20% (BY WEIGHT) OF PARTICLES SHALL FALL WITHIN THIS RANGE (#100 SIEVE);
   - VERY FINE SAND (0.075-0.15mm) AT A MAXIMUM OF 5% (BY WEIGHT) OF PARTICLES SHALL FALL WITHIN THIS RANGE (#200 SIEVE);
   - SILT (0.037-0.075mm) AT A MAXIMUM OF 5% (BY WEIGHT) OF PARTICLES SHALL FALL WITHIN THIS RANGE (#400 SIEVE);
   - CLAY (LESS THAN 0.037mm) AT A MAXIMUM OF 3% (BY WEIGHT) OF PARTICLES SHALL FALL WITHIN THIS RANGE (PAN).

8. PER CRIME PREVENTION THROUGH ENVIRONMENTAL DESIGN (CPTED) PRINCIPLES: SHRUBS/HEDGES SHALL BE MAINTAINED AT A HEIGHT NOT TO EXCEED 36 INCHES. CANOPY TREE CLEAR TRUNKS AT MATURITY SHALL BE MAINTAINED AT 6 FEET HEIGHT. EXISTING CANOPY TREES SHALL BE LIMBED UP TO 6 FEET CLEAR TRUNK.

9. PRIOR TO REMOVAL OF ANY TREES, THE TREES TO BE RETAINED SHALL HAVE PROTECTIVE TREE BARRIERS.

10. CONTRACTOR SHALL BE RESPONSIBLE FOR THEIR OWN TAKE OFFS AND QUANTITIES. THE QUANTITIES ON THE PLANT LIST SERVE ONLY AS A GUIDE. THIS INCLUDES SOD AND MULCH QUANTITIES OF WHICH THE CONTRACTOR SHALL BE HELD TO BID QUANTITIES. IN THE EVENT OF A CONFLICT BETWEEN QUANTITIES REPRESENTED ON THE PLAN VS. QUANTITIES SHOWN ON THE PLANT LIST, THE PLAN SHALL CONTROL.

11. PALM TREES TO BE PLANTED AT ORIGINAL ROOT BALL DEPTHS. DO NOT BACKFILL ONTO PALM TRUNK.

12. LANDSCAPE SHALL BE INSTALLED PER FDOT INDEX NO. 544 DESIGN STANDARDS.

13. LANDSCAPE INSTALLATION SHALL MEET THE REQUIREMENTS OF SPECIFICATION SECTION 580.

14. PRIOR TO PLACING MIX AND BACKFILL, OR COMMENCING WITH PLANTING, ROTOTILL ANY OR ALL AREAS THAT HAVE BEEN PREVIOUSLY COMPACTED OVER 90 PERCENT FOR OTHER CONSTRUCTION PURPOSES. DESIRED INFILTRATION OR PERCOLATION RATE OF SOIL TO BE 12" PER HOUR.

15. CONSTRUCTION SHALL BE IN COMPLIANCE WITH 2010 ADA STANDARDS FOR ACCESSIBLE DESIGN, TITLE II. CONTRACTOR SHALL BE FAMILIAR WITH TOLERANCES ALLOWED BY ADAAG AND ENSURE WORK DONE FALLS WITHIN THESE TOLERANCES.

TREE PROTECTION/PRUNING REQUIREMENTS

1. PROTECT EXISTING TREES AND UNDERGROWTH TO REMAIN AGAINST:
   - + UNNECESSARY CUTTING, BREAKING, OR SKINNING OF ROOTS AND LIMBS
   - + SKINNING AND BRUISING OF BARK
   - + SMOTHERING OF TREES BY STOCKPILING CONSTRUCTION OR EXCAVATION MATERIAL WITHIN DRIP-LINE
   - + EXCESS FOOT OR VEHICULAR TRAFFIC
   - + PARKING VEHICLES WITHIN DRIP-LINE

2. ERECT TEMPORARY PLASTIC CONSTRUCTION FENCING BEFORE COMMENCEMENT OF ANY SITE CLEARING OR GRADING. FENCE SHALL BE A MINIMUM HEIGHT OF 4 FT. WITH WOOD POSTS SET DEEP ENOUGH IN THE GROUND TO BE STABLE WITHOUT ADDITIONAL SUPPORT. ALL FENCING SHOULD BE SET BEYOND THE DRIP-LINE OF EXISTING TREES AND A MINIMUM OF 10' CLEAR DISTANCE FROM THE FACE OF ANY TREE TRUNKS AND SHALL FULLY ENCLOSE ALL TREES AND UNDERGROWTH SCHEDULED TO REMAIN. NOTHING SHALL BE PLACED INSIDE OF THE FENCE, INCLUDING, BUT NOT LIMITED TO, CONSTRUCTION MATERIALS, MACHINERY, CHEMICALS, OR TEMPORARY SOIL DEPOSITS. FOR TREES LARGER THAN 20" DBH, THE FENCE SHALL BE NO CLOSER THAN 15' FROM THE TREE TRUNK. WHEN PAVING, EXCAVATION, OR HARDSCAPE MUST BE DONE WITHIN THE FENCE, THE FENCE SHALL BE MOVED TO A SECONDARY LOCATION AT THE EDGE OF WORK, EXTRA CARE MUST BE TAKEN AT THIS TIME BY THE CONTRACTOR TO INSURE THAT NO DAMAGE TO THE TREE AND UNDERGROWTH OCCURS.

3. WATER IS TO BE PROVIDED TO EXISTING TREES AND UNDERGROWTH TO BE PRESERVED AS REQUIRED TO MAINTAIN THEIR HEALTH DURING CONSTRUCTION.

4. FOR GRADE CUTS WITHIN THE DRIP LINES, ROOTS SHALL NOT BE TRACTOR CLEARED. LIMIT OF CONSTRUCTION SHALL BE DETERMINED, FENCE PLACED, AND ROOTS CUT CLEAN WITH A POWER SAW. MUST CLEANLY CUT ROOTS TO AVOID SHEARING OF ROOTS AND DAMAGE TREES. TEMPORARILY COVER EXPOSED ROOTS WITH MOIST MULCH TO PREVENT DRYING AND COVER WITH EARTH AS SOON AS POSSIBLE.

5. NO CLEARING OF UNDERGROWTH SHALL TAKE PLACE WITHOUT PRIOR APPROVAL OF THE ENGINEER. WHEN THE CLEARING OF UNDERGROWTH DOES TAKE PLACE, IT SHALL BE DONE BY QUALIFIED PERSONNEL SO AS NOT TO DAMAGE TREE ROOTS. MULCH SHALL BE IMMEDIATELY PLACED OVER ANY CLEARED UNDERGROWTH AREA TO PROTECT SURFACE ROOTS OF TREES.

6. NO GRADE CHANGES ARE TO BE MADE WITHIN THE FENCE WITHOUT PRIOR APPROVAL OF THE ENGINEER.

7. INTERFERING BRANCHES MAY BE REMOVED AT THE DIRECTION OF THE ENGINEER BY AN ISA CERTIFIED ARBORIST.

8. THE CONTRACTOR SHALL REPAIR OR REPLACE TREES INDICATED TO REMAIN, WHICH ARE DAMAGED IN THE CONSTRUCTION OPERATIONS, IN A MANNER ACCEPTABLE TO THE ENGINEER. EMPLOY A QUALIFIED TREE SURGEON TO REPAIR MAJOR DAMAGE TO TREES AND SHRUBS, PROMPTLY, TO PREVENT PROGRESSIVE DETERIORATION CAUSED BY THE DAMAGE. CONTRACTOR SHALL PROVIDE DOCUMENTATION TO THE ENGINEER OF REPAIRS OR RECOMMENDATIONS FROM AN ISA CERTIFIED ARBORIST.

9. CONTRACTOR SHALL BE RESPONSIBLE FOR TREES DAMAGED BEYOND REPAIR. TREES SHALL BE REPLACED ON AN INCH FOR INCH BASIS WITH TREES OF 5" CALIPER OR GREATER OF THE SAME SPECIES EQUALING THE OVERALL CALIPER OF THE TREE REMOVED. IF A 20" CALIPER TREE IS REMOVED, IT SHALL BE REPLACED WITH (4) 5" CALIPER TREES. REPLACEMENT TREES SHALL BE "FLORIDA #1 GRADE" OR BETTER. IF TREES ARE HARMED THROUGH LACK OF PROTECTION OR NEGLIGENCE, THE CONTRACTOR SHALL BEAR THE BURDEN OF COST OF REPAIR OR REPLACEMENT.

10. FENCE LOCATIONS TO BE APPROVED IN THE FIELD BY THE ENGINEER.

NOTICE: THE OFFICIAL RECORD OF THIS SHEET IS THE ELECTRONIC FILE SIGNED AND SEALED UNDER RULE 61G10-11.011, F.A.C.

REVISIONS					
DATE	BY	DESCRIPTION	DATE	BY	DESCRIPTION

Christina E. Hite, RLA #1340
DIX.HITE + PARTNERS
150 W. JESSUP AVENUE
LONGWOOD, FLORIDA
TEL 407.667.1777
FAX 407.667.1779
Certificate of Authorization No. LC0000358

STATE OF FLORIDA
DEPARTMENT OF TRANSPORTATION

ROAD NO.	COUNTY	FINANCIAL PROJECT ID
CFRC P2S	VARIOUS	423446-9-52-01

CENTRAL FLORIDA COMMUTER RAIL TRANSIT (CFCRT) PHASE 2 SOUTH

LANDSCAPE GENERAL NOTES

SHEET NO.
56

PrinceK 5/26/2015 4:33:27 PM Q:\4234469520\roadway\C00-002 - Gen Notes.dgn

DRAWING NO.
C00.002E

STRUCTURAL GENERAL NOTES:

CODES AND STANDARDS

ALL WORK SHALL CONFORM TO THE FOLLOWING CODES AND STANDARDS. USE THE LATEST EDITION UNLESS NOTED OTHERWISE.

A. FLORIDA BUILDING CODE - 2010.
B. "MINIMUM DESIGN LOADS FOR BUILDINGS AND OTHER STRUCTURES" - ASCE 7-10.
C. "BUILDING CODE REQUIREMENTS FOR REINFORCED CONCRETE", ACI 318-08.
D. "ACI MANUAL OF CONCRETE PRACTICE" - PARTS 1 THROUGH 5 - LATEST EDITION.
E. "STEEL CONSTRUCTION MANUAL", THIRTEENTH EDITION.
F. "STRUCTURAL WELDING CODE ANSI/AWS D1.1-08", AMERICAN WELDING SOCIETY.
G. "2010 ADA STANDARDS FOR ACCESSIBLE DESIGN, TITLE II."

GENERAL CONDITIONS

A. IN CASE OF CONFLICT BETWEEN THE GENERAL NOTES, DRAWINGS AND SPECIFICATIONS, THE MOST RIGID REQUIREMENT MUST GOVERN. DISCREPANCIES SHALL BE BROUGHT TO THE ATTENTION OF THE ENGINEER.

B. IT IS THE CONTRACTOR'S SOLE RESPONSIBILITY TO DETERMINE ERECTION PROCEDURE AND SEQUENCE TO INSURE THE SAFETY OF THE CONSTRUCTION SITE.

C. THE CONTRACTOR SHALL REVIEW AND DETERMINE THAT DIMENSIONS ARE COORDINATED BETWEEN ARCHITECTURAL AND STRUCTURAL DRAWINGS PRIOR TO FABRICATION OR START OF CONSTRUCTION.

D. THE ENGINEER WILL ENGAGE AN APPROVED TESTING AGENCY TO PROVIDE SERVICES AS INDICATED BELOW. SUBMIT REPORTS TO ENGINEER.

1. TEST SOIL COMPACTION PER GEOTECHNICAL REPORT
2. TEST CONCRETE IN ACCORDANCE WITH ASTM C172 AND C31. SEE SPECIFICATION FOR ADDITIONAL REQUIREMENTS.
3. TEST MASONRY GROUT IN ACCORDANCE WITH ASTM C1019.
4. TEST STRUCTURAL STEEL CONNECTIONS PER SPECIFICATIONS.

LIGHT POLE, SIGNAGE AND OTHER FOUNDATIONS

1. ALLOWABLE NET SOIL BEARING PRESSURE IS ASSUMED TO BE 2000 PSF OR GREATER. THE PROJECT GEOTECHNICAL ENGINEER MUST DETERMINE THE ALLOWABLE SOIL BEARING PRESSURE AND SUBMIT THEIR REPORT FOR THE RECORD.

2. ALL REQUIREMENTS FOR SITE PREPARATION AND SOIL COMPACTION SPECIFIED IN THE SOILS REPORT SHALL BE FOLLOWED UNLESS ADDITIONAL MORE STRINGENT REQUIREMENTS ARE SPECIFIED. A CERTIFIED TESTING AGENCY SHALL PERFORM SOIL DENSITY TESTS TO ENSURE CONFORMANCE WITH THE GEOTECHNICAL REPORT. SUBMIT ALL TEST RESULTS TO THE ENGINEER.

3. CONTRACTOR IN CONJUNCTION WITH THE ENGINEER SHALL VERIFY EXISTING FIELD CONDITIONS DURING EXCAVATION THAT MAY AFFECT THE ALLOWABLE BEARING PRESSURE AND OR THE INSTALLATION OF THE FOUNDATION SYSTEM PRIOR TO STARTING WORK.

4. ALL FOOTINGS SHALL BE CENTERED UNDER THE POLE ABOVE UNLESS NOTED OTHERWISE.

CAST IN PLACE CONCRETE

1. ALL CONCRETE WORK SHALL BE IN ACCORDANCE WITH FDOT STANDARDS AND "THE BUILDING CODE REQUIREMENTS FOR REINFORCED CONCRETE" ACI 318 LATEST EDITION, AND "SPECIFICATIONS FOR STRUCTURAL CONCRETE FOR BUILDINGS," ACI 301, LATEST EDITION.

2. ALL CONCRETE SHALL USE THE FOLLOWING FDOT CLASS OF CONCRETE PER TABLE 2 IN SECTION 346-3 CLASSIFICATION, STRENGTH, SLUMP AND AIR CONTENT:

PLACEMENT	FDOT CLASS OF CONCRETE	SPECIFIED STRENGTH	TARGET SLUMP
FOOTINGS (LIGHT POLE &SIGNAGE)	II	3400 psi	3"
PLATFORM SLAB AND GRADE BEAMS	III	5000 psi	3"
COLUMN BLOCK-OUTS & PEDESTAL'S	III	5000 psi	3"
REMAINING CONCRETE	III	5000 psi	3"

3. A HIGHER TARGET SLUMP, NOT TO EXCEED 7" IS ACCEPTABLE WHEN A TYPE F, G, I OR II ADMIXTURE IS USED.

STRUCTURAL STEEL NOTES

1. STRUCTURAL STEEL SHALL CONFORM TO THE AISC "SPECIFICATIONS FOR DESIGN, FABRICATION AND ERECTION OF STRUCTURAL STEEL FOR BUILDINGS". THIRTEENTH EDITION.

2. WELDED CONNECTIONS SHALL CONFORM TO THE LATEST REVISED CODE OF THE AMERICAN WELDING SOCIETY, AWS D1.1.

3. STRUCTURAL STEEL SHALL CONFORM TO THE FOLLOWING REQUIREMENTS UNLESS NOTED OTHERWISE:

ANGLES, PLATES, CHANNEL	ASTM A36
STEEL TUBES	ASTM A500, GRADE B, Fy=45,000 PSI
W-SHAPES	ASTM A-992, Fy=50,000 PSI
ANCHOR BOLTS	ASTM F1554, GRADE 36
PIPE	ASTM A53, GRADE B
GALV DIAGONAL ROD	ASTM A36
GALV HIGH STRENGTH BOLTS	ASTM A325-N
HARDENED STEEL WASHERS	ASTM F436
GALV CLEVISES, PINS AND TURNBUCKLES	PER AISC MANUAL-TABLE 15-3,4,5 & 8. SEE DWGS. FOR REQUIRED STRENGTH

4. STEEL SHAPES, PLATES, ETC., SHALL HAVE SSPC-SP6 SURFACE PREPARATION FOR A HIGH PREFORMANCE COATING.

5. ALL SHOP AND FIELD CONNECTIONS SHALL BE MADE WITH HIGH STRENGTH BOLTS OR WELDS. ALL HIGH STRENGTH BOLTS AND NUTS SHALL BE CLEARLY MARKED AS REQUIRED BY AISC SPECIFICATIONS. CONNECTIONS MADE WITH UNMARKED BOLTS AND NUTS WILL BE REJECTED. BOLT CONNECTIONS SHALL CONFORM TO THE REQUIREMENTS OF THE "SPECIFICATIONS FOR STRUCTURAL JOINTS USING ASTM A325 BOLTS" AS APPROVED BY THE COUNCIL ON RIVETED AND BOLTS JOINTS. USE BEARING TYPE WITH THREADS ALLOWED ACROSS THE SHEAR PLANE.

6. STEEL SHAPES, PLATES, ETC. AT ALL CANOPY FRAMING IS "ARCHITECTURALLY EXPOSED STRUCTURAL STEEL" AND SHALL MEET THE AISC SPECIAL FABRICATION REQUIREMENTS IN SECTION 10 IN THE STEEL CONSTRUCTION MANUAL THIRTEENTH EDITION. THE SURFACE PREPARATION SHALL BE "SSPC-SP6" UNLESS NOTED OTHERWISE. ALL CANOPY FRAMING SHALL BE PRIMED WITH TWO-COMPONENT POLYAMIDOAMINE EPOXY OR APPROVED EQUAL. ALL OTHER STEEL SHAPES, PLATES, ETC. WHICH ARE EXPOSED TO CONCRETE OR WEATHER AND ARE NOT "ARCHITECTURALLY EXPOSED STEEL" MUST BE G90 GALVANIZED UNLESS PROTECTED BY AN APPROVED HIGH PERFORMANCE COATING. SEE SPECIFICATIONS.

7. AN APPROVED LICENSED TESTING COMPANY SHALL VISUALLY INSPECT ALL WELDS AND TEST BOLTS AT ALL CONNECTIONS FOR FULL TENSION AS REQUIRED BY THE AISC CODE FOR FULLY TIGHTENED A325 BOLTS. SEE SPECIFICATIONS FOR ADDITIONAL TESTING REQUIREMENTS.

8. TOUCH UP FIELD WELDS AND ANY DAMAGED AREAS OF PAINT IN FIELD AFTER WELDING. (USE APPROVED PRIMER AT "ARCHITECTURALLY EXPOSED STEEL AND GALVANIZED PAINT FOR TOUCH OF GALVANIZED STEEL).

9. ALL WELDED CONNECTIONS SHALL BE COMPLETE WITH E70XX ELECTRODES. SHOP AND FIELD WELDS SHALL BE MADE BY APPROVED CERTIFIED WELDERS IN ACCORDANCE WITH AND THE AMERICAN WELDING SOCIETY CODE FOR BUILDINGS (AWS D1.1). ACCEPTANCE TO BE SUBJECT TO THE INSPECTION AND REVIEW HAVE AN INDEPENDENT INSPECTION AGENCY.

10. FIELD STRUCTURAL STEEL TO BE INSPECTED BY QUALIFIED INSPECTORS APPROVED BY THE STRUCTURAL ENGINEER. FIELD INSPECTION REPORTS TO BE FILED WITH THE STRUCTURAL ENGINEER WITHIN 5 DAYS OF THE TIME OF ACTUAL INSPECTION. INSPECTORS MUST BE NOTIFIED OF ALL PHASES OF CONSTRUCTION BY THE CONTRACTOR.

11. ALL STRUCTURAL STEEL SHALL BE SHOP PAINTED WITH A HIGH PERFORMANCE PAINT. IT IS THE CONTRACTOR'S OPTION TO PLACE THE FINAL COAT IN THE FIELD OR IN THE SHOP. IF FINAL COATING IS PLACED IN THE SHOP, IT IS THE CONTRACTOR'S RESPONSIBILITY TO REPAIR THE COATING AS REQUIRED TO SATISFY THE PERFORMANCE PAINT REQUIREMENTS.

12. PROVIDE HIGH PERFORMANCE PAINT ON ALL UNGALVANIZED PIECES EXCEPT AT AREAS TO BE FIELD WELDED. SEE SPECIFICATIONS.

13. SEE SPECIFICATION FOR ADDITIONAL REQUIREMENTS.

METAL ROOF DECK NOTES

1. ROOF DECK SHALL BE GALV. 3" - 20 GAGE TYPE N METAL DECK U.N.O.
   DECK SECTION PROPERTIES:
   Ip= 0.848 in4 /ft
   Sp = 0.501 in3 /ft
   In = 1.079 in4 /ft
   Sn = 0.552 in3 /ft
   fy= 50 KSI (MINIMUM)

   AT KISSIMMEE STATION:

   ROOF DECK SHALL BE GALV. 1-1/2" - 20 GAGE TYPE B METAL DECK. THE MINIMUM DECK PROPERTIES SHALL BE:

   Ip = 0.201 in4 /ft
   Sp = 0.234 in3 /ft
   In = 0.22 in4 /ft
   Sn = 0.247 in3 /ft
   fy = 50 KSI (MINIMUM)

   FASTEN ROOF DECK WITH 5/8" DIA. PUDDLE WELDS USING A 24/4 PATTERN TO ALL SUPPORTS EXCEPT 12" O.C. AT SIDE SUPPORTS.
   PROVIDE S.S. #10 SCREWS AT 24" O.C. AT ALL SIDELAPS. ALL SIDELAP SCREWS MUST BE PLACED FROM BOTTOM SIDE - COORDINATE WITH ENGINEER.

2. SEE SPECIFICATIONS FOR ADDITIONAL REQUIREMENTS.

PLYWOOD ROOF DECK NOTES

1. PLYWOOD SHEATHING LOCATION AND REQUIREMENTS SHALL BE COORDINATED WITH THE ROOFING AND ARCHITECTURAL DETAILS.

2. UNLESS NOTED OTHERWISE THE PLYWOOD SHEATHING BE:
   15/32" CDX PLYWOOD FASTENED TO 20GA HAT CHANNELS WITH EQUIVALENT 10-24 X 1" WOOD TO METAL FASTENERS AT 6" O.C. (MAX).

NOTICE: THE OFFICIAL RECORD OF THIS SHEET IS THE ELECTRONIC FILE SIGNED AND SEALED UNDER RULE 61G15-23.003, F.A.C.

REVISIONS

DATE	BY	DESCRIPTION	DATE	BY	DESCRIPTION

McElroyEngineering LLC
STRUCTURAL DESIGN GROUP
1835 EDGEWATER DR. ORLANDO, FL. 32804
P: 407.245.8775 | F: 407.245.8744
www.mcelroyeng.com
CERTIFICATE OF AUTHORIZATION - 8822
CRAIG E. McELROY, P.E. NO. 44741

STATE OF FLORIDA
DEPARTMENT OF TRANSPORTATION

ROAD NO.	COUNTY	FINANCIAL PROJECT ID
CFRC P2S	VARIOUS	423446-9-52-01

CENTRAL FLORIDA COMMUTER RAIL TRANSIT (CFCRT) PHASE 2 SOUTH

STRUCTURAL GENERAL NOTES

SHEET NO. 57

DRAWING NO.
C00.002G

COMMUNICATION GENERAL NOTES:

1. PERFORM WORK IN CONFORMANCE TO THE REQUIREMENTS OF THE SPECIFICATIONS, DRAWINGS, THE LATEST EDITION OF THE NATIONAL ELECTRICAL CODE (NEC), OSHA REGULATIONS, 2010 ADA STANDARDS FOR ACCESSIBLE DESIGN, TITLE II, AND THE REGULATIONS OF AUTHORITIES HAVING JURISDICTION.

2. LOCATIONS OF EQUIPMENT AND RACEWAYS, UNLESS SPECIFICALLY DIMENSIONED ARE APPROXIMATE ONLY. REFER TO ARCHITECTURAL AND MECHANICAL PLANS FOR EXACT EQUIPMENT LOCATIONS OR ESTABLISH EXACT LOCATIONS IN THE FIELD TO CLEAR ALL OBSTACLES.

3. INSTALL CONDUITS, JUNCTION BOXES AND OTHER ELECTRICAL EQUIPMENT TO NOT INTERFERE WITH THE OPERATION OF DOORS AND OTHER EQUIPMENT. CONCEAL ALL CONDUITS TO THE EXTENT POSSIBLE. ALL EXPOSED CONDUIT TO BE INTERMEDIATE METAL CONDUIT AND RUN PARALLEL OR PERPENDICULAR TO STRUCTURAL BEAMS. ALL CONDUIT FASTENERS SHALL BE HDG.

4. USE ONLY NEMA 4X TYPE ENCLOSURES AND RACEWAY FITTINGS, THROUGHOUT PROJECT, EXCEPT AS NOTED.

5. DEVELOP DETAILS AND SUBMIT TYPICALS FOR EACH TYPE OF MOUNTING ARRANGEMENT. SELECT MATERIALS DESIGNED FOR USE IN OUTDOOR/WET ENVIRONMENTS UNLESS DIRECTED OTHERWISE.

6. PROVIDE DETAILED INSPECTION OF SYSTEM INTEGRATION AND DESIGNS FOR POWER AND COMMUNICATIONS SYSTEMS AS SPECIFIED AND NOTED ELSEWHERE IN THE CONTRACT DOCUMENTS.

7. FINAL CONDUIT CONNECTIONS TO EQUIPMENT SUBJECT TO MOVEMENT OR VIBRATION SHALL BE MADE WITH LIQUID-TIGHT FLEXIBLE METAL CONDUIT (LIQUID TIGHT TYPE CEA OR EQUAL.) MINIMUM LENGTH OF 12" AND MAXIMUM LENGTH OF 30" WITH EXTERNAL GROUND JUMPER AND LIQUID TIGHT CONNECTORS.

8. PERFORM ALL CUTTING, DRILLING, AND CORE BORING AS NECESSARY TO PROVIDE PENETRATIONS THROUGH WALLS AND FLOORS FOR ELECTRICAL INSTALLATION WORK. PATCH AND RESTORE ALL PENETRATION OPENINGS TO ORIGINAL CONDITION. ALL SUCH WORK SHALL BE SUBMITTED TO FDOT FOR ACCEPTANCE BEFORE COMMENCING. FIRE RATINGS OF ALL PENETRATED WALLS AND FLOORS SHALL BE MAINTAINED. ALL WALL AND FLOOR PENETRATIONS SUBJECT TO MOISTURE SHALL BE WATER PROOFED.

9. ALL UNUSED OPENINGS IN CONDUIT BOXES SHALL BE CAPPED AND SEALED. ALL COMMUNICATIONS CONDUITS SHALL BE WATER TIGHT; INCLUDING A DIRECT WATER SPRAYING.

10. ALL MATERIALS REQUIRED SHALL BEAR U.L. LISTING AND LABELING WHERE SUCH STANDARDS HAVE BEEN ESTABLISHED.

11. FURNISH AND INSTALL ALL MISCELLANEOUS CONDUIT FITTINGS, CONDUITS, CONNECTORS, CLAMPS, HARDWARE, HANGERS, SUPPORTS, ETC. NECESSARY FOR A COMPLETE INSTALLATION EVEN IF NOT SHOWN ON THE CONTRACT DRAWINGS.

12. THE EQUIPMENT MOUNTING DETAILS AS SHOWN ARE FOR LOCATION OF EQUIPMENT PURPOSES ONLY. THE CONTRACTOR SHALL PROVIDE AND SUBMIT FOR APPROVAL MOUNTING DETAILS AND STRUCTURAL CALCULATIONS FOR ALL DEVICES AND HARDWARE MOUNTED ONTO THE STATION CANOPIES PRIOR TO INSTALLATION OF ANY DEVICES.

13. ALL NECESSARY MISCELLANEOUS HARDWARE WHICH INCLUDES, BUT NOT LIMITED TO, NUTS, BOLTS, SCREWS, LUGS, WIRE CABLE TIES, AND DEVICE MOUNTING HARDWARE SHALL BE INCLUDED IN THE BID PRICING.

14. THE CONTRACTOR IS REQUIRED TO COORDINATE WITH THE ENGINEER TO PROVIDE ALL CONNECTIONS TO AND PROGRAMMING OF EXISTING HEAD END SYSTEMS AT THE OCC TO ACCEPT THE EQUIPMENT PROVIDED AT THE PHASE 2 SOUTH STATIONS AS INDICATED IN THE DRAWINGS. ALL EQUIPMENT MUST BE COMPATIBLE WITH EXISTING SYSTEMS AT THE OCC. IT IS THE RESPONSIBILITY OF THE CONTRACTOR TO VERIFY EXISTING SYSTEMS AND ENSURE COMPATIBILITY.

15. FURNISH AND INSTALL MACHINE GENERATED LABELS TO IDENTIFY EACH COMMUNICATION CABLE AT BOTH ENDS.

16. ALL CAT 6 ETHERNET CONNECTIONS SHALL BE LIMITED TO 295 FT PER TIA 568 STDS.

NOTICE: THE OFFICIAL RECORD OF THIS SHEET IS THE ELECTRONIC FILE SIGNED AND SEALED UNDER RULE 61G15-23.003, F.A.C.

REVISIONS					
DATE	BY	DESCRIPTION	DATE	BY	DESCRIPTION

SYSTRA Engineering, Inc.
520 EIGHTH AVENUE,SUITE 2100
NEW YORK, NY 10018
T. (212) 494-9111 F. (212) 494-9112
Certificate of Authorization No. 6209

STEVE YAZBEK PE NO. 79153 www.systraconsulting.com

STATE OF FLORIDA
DEPARTMENT OF TRANSPORTATION

ROAD NO.	COUNTY	FINANCIAL PROJECT ID
CFRC P2S	VARIOUS	423446-9-52-01

CENTRAL FLORIDA COMMUTER RAIL TRANSIT (CFCRT) PHASE 2 SOUTH

COMMUNICATION GENERAL NOTES

SHEET NO.
59

ELECTRICAL GENERAL NOTES

1. THE CONTRACTOR SHALL PROVIDE THE ELECTRICAL PORTION OF THE PROJECT. THIS INCLUDES, BUT IS NOT LIMITED TO: TEMPORARY ELECTRIC SERVICE AND DISTRIBUTION FOR CONSTRUCTION PURPOSES; PERMANENT BUILDING SERVICE ENTRANCE EQUIPMENT AND FEEDER DISTRIBUTION; TRENCH EXCAVATION, PUMPING, BACKFILLING AND COMPACTION FOR ALL UNDERGROUND ELECTRICAL WORK; BUILDING INTERIOR SWITCHBOARD, BRANCH CIRCUITS; ELECTRICAL DISCONNECTS, DEVICES, BOXES, SWITCHES, AND LIGHTING FIXTURES; CONDUITS, CABLING AND OUTLETS FOR TELEPHONE, AND COMPUTER SYSTEMS; AND COORDINATION WITH THE ELECTRIC UTILITY, OTHER CONTRACTORS, THE ENGINEER AND THE DEPARTMENT.

2. FOR THE PURPOSE OF THIS CONTRACT THE TERM "PROVIDE" SHALL MEAN TO PROVIDE ALL LABOR, MATERIAL, EQUIPMENT, TRANSPORTATION, AND SUPERVISION REQUIRED TO FURNISH AND INSTALL.

3. THE NATIONAL ELECTRICAL CODE, NATIONAL ELECTRIC SAFETY CODE, NECA STANDARD OF INSTALLATION, FLORIDA BUILDING CODE, AND SUNRAIL DESIGN CRITERIA, LATEST EDITIONS, SHALL ESTABLISH THE MINIMUM REQUIREMENTS FOR INSTALLATION, BUT IN ADDITION, ALL WORK SHALL ALSO COMPLY WITH OSHA, STATE, COUNTY, LOCAL OR MUNICIPAL CODE REQUIREMENTS, 2010 ADA STANDARDS FOR ACCESSIBLE DESIGN, TITLE II, AND THE RULES OF THE LOCAL ELECTRICAL COMPANY. IN CASE OF CONFLICTS, CONFORM TO THE MORE STRINGENT REQUIREMENTS. IN CASES OF CONFLICTS BETWEEN THESE DESIGN DOCUMENTS AND REQUIREMENTS OF THE ABOVE CODES, CONTACT THE ENGINEER BEFORE PROCEEDING.

4. ALL MATERIALS USED IN THIS PROJECT SHALL BE NEW AND UNDERWRITER'S LABORATORIES (UL) LISTED AND LABELED, UNLESS OTHERWISE NOTED.

5. SUBMIT SHOP DRAWINGS, CATALOG SHEETS, OR OTHER DESCRIPTIVE DATA WITH SUFFICIENT INFORMATION TO ESTABLISH DESIGN, QUALITY AND PERFORMANCE. SUBMIT DATA FOR: SERVICE EQUIPMENT, DISCONNECTS, FUSES, SWITCHBOARD, PANELBOARDS, YARD POWER UNITS, WIRING DEVICES, WIRE, CONDUIT, LIGHT FIXTURES, TIME SWITCHES, LIGHTING CONTACTORS, SURGE SUPPRESSION DEVICES, TRANSFORMERS, AUTOMATIC TRANSFER SWITCH, AND GENERATOR. PROVIDE SUBMITTALS AS A SINGLE PACKAGE.

6. PROVIDE EQUIPMENT NAMEPLATES FOR ALL EQUIPMENT, INCLUDING SERVICE EQUIPMENT, SWITCHBOARD, PANELBOARDS, YARD POWER UNITS, DISCONNECTS AND TRANSFORMERS. NAMEPLATES SHALL BE ENGRAVED THREE-LAYER LAMINATED PLASTIC, WHITE LETTERS ON BLACK BACKGROUND. USE 1/8 INCH LETTERS FOR IDENTIFYING INDIVIDUAL EQUIPMENT AND LOADS AND 1/4 INCH LETTERS FOR GROUPED EQUIPMENT AND LOADS. FOR DEDICATED CIRCUIT POWER OUTLETS, PROVIDE EMBOSSED ADHESIVE TAPE, WITH 1/8 INCH BLACK LETTERS ON CLEAR BACKGROUND. LABEL DEDICATED OUTLETS WITH NAME OF LOAD, PANEL AND CIRCUIT NUMBER. PROVIDE ARC FLASH AND SHOCK HAZARD WARNING LABELS FOR ELECTRICAL EQUIPMENT PER NEC 110.16 AND NFPA-70E. ALSO, PROVIDE LABEL WITH AVAILABLE FAULT CURRENT AND DATE FOR EACH PANEL AND SWITCHBOARD PER THE NEC.

7. USE ONLY COPPER BUILDING WIRE WITH TYPE THWN.THHN (DUAL RATED) OR XHHW INSULATION (GROUND WIRES SHALL BE TYPE THW). WIRE SHALL BE SIZED AND COLOR CODED PER THE NEC. USE #12 AWG WIRE MINIMUM FOR POWER AND LIGHTING CIRCUITS. ALL WIRING (INCLUDING CONTROL WIRING) CONNECTED TO THE GENERATOR SHALL BE STRANDED.

8. ALL LINE VOLTAGE CIRCUITS SHALL BE RUN IN CONDUIT AND SHALL CONTAIN SEPARATE GROUNDING CONDUCTOR SIZED PER NEC TABLE 250.122 WITH THE EXCEPTION OF CONDUIT IN AIR PLENUMS, FINAL CONNECTIONS (LESS THAN 6 FEET) TO ALL MOTORS AND OTHER VIBRATING EQUIPMENT SHALL BE MADE WITH LIQUID-TIGHT FLEXIBLE METAL CONDUIT (WITH GROUNDING CONDUCTOR). FLEXIBLE METAL CONDUIT (WITH GROUNDING CONDUCTOR) SHALL ONLY BE USED FOR FINAL CONNECTION (LESS THAN 6 FEET) TO DROP-IN LIGHT FIXTURES. NONMETALLIC FLEX CONDUIT OR TUBING SHALL NOT BE USED. MINIMUM SIZE FOR CONDUIT SHALL BE 3/ 4", UNLESS OTHERWISE NOTED. ALL CONDUIT SHALL BE CONCEALED. INSTALL ABOVEGROUND CONDUIT PARALLEL OR PERPENDICULAR TO BUILDING LINES. PROVIDE PULLWIRE FOR ALL EMPTY CONDUITS. FINAL CONNECTION TO THE GENERATOR SHALL BE MADE IN LIQUID-TIGHT FLEXIBLE METAL CONDUIT. FLORIDA DEPARTMENT OF TRANSPORTATION (FDOT); STANDARD SPECIFICATION FOR ROAD AND BRIDGE CONSTRUCTION 2015, SECTION 630 CONDUIT SHALL ALSO APPLY (WHICH TAKES PRECEDENCE OVER THESE DESIGN DRAWINGS).

9. FOR EMT CONDUIT, MAXIMUM SIZE SHALL BE 2 INCHES. EMT CONDUIT SHALL NOT BE USED BELOW GRADE, OUTSIDE, IN CONCRETE, WHERE EXPOSED TO DAMAGE, OR FOR EXPOSED WORK IN AREAS WITHIN 8 FEET OF FLOOR. PROVIDE COMPRESSION TYPE FITTINGS.

10. PVC CONDUIT SHALL ONLY BE USED IN THE GROUND OR CONCRETE SLAB AND SHALL BE SCHEDULE 40. ALL ELLS TURNING UP OUT OF THE EARTH OR CONCRETE SLAB SHALL BE ASPHALTUM OR PVC COATED RIGID GALVANIZED STEEL CONDUIT.

11. MC CABLE MAY BE USED FOR 15 AND 20A, 120V BRANCH CIRCUITS WHERE ALLOWED BY THE CONTRACT. ANY MC CABLE WILL BE HIDDEN IN WALLS WITH HOMERUNS IN CONDUIT.

12. SEE PANEL SCHEDULES ON SHEETS E00.706 THROUGH E00.724 AND POWER RISER DIAGRAM ON SHEET E18.401 FOR SIZE OF ALL CONDUCTORS AND CONDUIT.

13. NO MORE THAN 3 CURRENT CARRYING CONDUCTORS (ON ALTERNATING PHASES) SHALL BE COMBINED IN ONE HOMERUN CONDUIT.

14. EXCEPT WHERE OTHERWISE NOTED, ALL ELECTRICAL DEVICES AND JUNCTION BOXES SHALL BE MADE OF GALVANIZED STEEL. BOXES FOR WEATHERPROOF AND WATERTIGHT APPLICATIONS OR IN CONCRETE SHALL BE MADE OF CAST METAL. PROVIDE PULL BOXES AND HANDHOLES AS NECESSARY FOR THE CIRCUITS SHOWN. STANDARD FDOT SPECIFICATION FOR ROAD AND BRIDGE CONSTRUCTION 2015, SECTION 635 PULL AND JUNCTION BOXES SHALL ALSO APPLY (WHICH TAKES PRECEDENCE OVER THESE DESIGN DRAWINGS).

15. ALL DRY-TYPE TRANSFORMERS SHALL BE EQUIPPED WITH A LINE-SIDE DISCONNECT WITHIN SIGHT OF THE TRANSFORMER OR A LOCKABLE CIRCUIT BREAKER WITH LOCATION FIELD MARKED ON TRANSFORMER PER PROJECT GENERAL NOTE 6.

16. WITH THE EXCEPTION OF DEVICES ABOVE COUNTERS, MOUNT RECEPTACLES, DATA AND TELEPHONE OUTLETS 18" AFF, UNLESS OTHERWISE NOTED. ABOVE COUNTER RECEPTACLES SHALL BE MOUNTED 6" ABOVE BACK SPLASH TO CENTERLINE OF DEVICE. MOUNT SWITCHES 48" AFF (TO CENTERLINE OF DEVICE) UNLESS OTHERWISE NOTED. CONFORM TO ALL ADA REQUIREMENTS. ALL DEVICES SHALL BE MOUNTED VERTICAL, UNLESS OTHERWISE NOTED. ALL RECEPTACLES SHALL BE MOUNTED SUCH THAT THE GROUND PIN IS MOUNTED DOWN.

17. PENETRATE ANY FIRE RATED WALLS, CEILINGS, AND FLOORS WITH FIRE STOPPING MATERIALS IN ACCORDANCE WITH FLORIDA BUILDING CODE REQUIREMENTS. PENETRATIONS OF ALL FIRE RATES ASSEMBLIES SHALL BE MADE IN ACCORDANCE WITH THE FIRE RATED ASSEMBLY'S UL LISTING, AS APPROVED BY THE AUTHORITY HAVING JURISDICTION. SEE ARCHITECTURAL DRAWINGS FOR LOCATIONS OF ANY FIRE RATED WALLS, CEILINGS, AND FLOORS.

18. UNLESS OTHERWISE NOTED, ALL MOTORS, INTEGRAL STARTERS, CONTROL AND MONITORING DEVICES (INCLUDING WIRE AND CONDUIT FOR CONTROL CIRCUITS), TIMERS, RELAYS, PILOT DEVICES AND OTHER REQUIRED CONTROL COMPONENTS FOR MECHANICAL SYSTEMS WILL BE FURNISHED AND INSTALLED UNDER DIVISION 15.

19. UNLESS OTHERWISE NOTED, MAKE POWER WIRING CONNECTIONS TO ALL WATER HEATERS, PUMPS, MACHINERY, APPLIANCES, WATER COOLERS, HVAC EQUIPMENT AND OTHER ELECTRICALLY-OPERATED EQUIPMENT AS INDICATED OR AS REQUIRED. FURNISH AND INSTALL DISCONNECT SWITCHES, STARTERS AND PROTECTIVE DEVICES AS INDICATED ON THE DRAWINGS, EXCEPT FOR ITEMS FURNISHED WITH INTEGRAL DISCONNECT SWITCHES AND/OR STARTERS (SEE MECHANICAL AND PLUMBING SCHEDULES).

20. DRAWINGS INTENDED TO BE DIAGRAMMATIC ONLY. REVIEW ARCHITECTURAL, CIVIL, MECHANICAL AND PLUMBING DRAWINGS AND COORDINATE WITH OTHER CONTRACTORS TO CONFIRM EXACT LOCATION FOR LIGHTING FIXTURES, ELECTRICAL DEVICES, WIRING AND EQUIPMENT AND AVOID INTERFERENCE BETWEEN RACEWAYS, DUCTS, PIPING, AND STRUCTURAL MEMBERS. RELOCATE EQUIPMENT AS NECESSARY TO MAINTAIN NEC WORKING CLEARANCES AND DEDICATED EQUIPMENT SPACE REQUIREMENTS.

21. THE ABOVE NOTES APPLY TO ALL ELECTRICAL WORK.

NOTICE: THE OFFICIAL RECORD OF THIS SHEET IS THE ELECTRONIC FILE SIGNED AND SEALED UNDER RULE 61G15-23.003, F.A.C.

REVISIONS					
DATE	BY	DESCRIPTION	DATE	BY	DESCRIPTION

TLC Engineering for Architecture
255 S. Orange Avenue, Suite 1600
Orlando, FL. 32801
T 407.841-9050 F 407.425-7367
Certificate of Authorization No. 15
www.tlc-engineers.com
Victor M Diaz PE NO. 55919

STATE OF FLORIDA
DEPARTMENT OF TRANSPORTATION

ROAD NO.	COUNTY	FINANCIAL PROJECT ID
CFRC P2S	VARIOUS	423446-9-52-01

CENTRAL FLORIDA COMMUTER RAIL TRANSIT (CFCRT) PHASE 2 SOUTH

ELECTRICAL GENERAL NOTES

SHEET NO. 60

DRAWING NO.

C00.002L

ARCHITECTURAL GENERAL NOTES

1. THE DRAWINGS AND SPECIFICATIONS, AND ALL COPIES, THEREOF, ARE LEGAL INSTRUMENTS OF SERVICE FOR THE USE OF THE DEPARTMENT AND AUTHORIZED REPRESENTATIVES ON THE DESIGNATED PROPERTY ONLY. OTHER USE, WITHOUT THE EXPRESSED WRITTEN PERMISSION OF THE ENGINEER, IS PROHIBITED.

2. SPECIFICATIONS, DETAILS AND SCHEDULES WHICH MAY BE BOUND SEPARATELY, ARE PART OF THESE CONTRACT DOCUMENTS. DRAWINGS BY CONSULTING PROFESSIONALS, SUCH AS STRUCTURAL, MECHANICAL, ETC., ARE SUPPLEMENTARY TO THE ARCHITECTURAL DRAWINGS AND ARE PART OF THESE CONTRACT DOCUMENTS.

3. ALL SYMBOLS AND ABBREVIATIONS USED ON THE DRAWINGS ARE CONSIDERED TO BE CONSTRUCTION STANDARDS. QUESTIONS REGARDING THE SAME, OR THEIR EXACT MEANING, SHALL BE DIRECTED TO THE ENGINEER.

4. THE CONTRACTOR SHALL NOTIFY THE ENGINEER IMMEDIATELY OF ANY OMISSIONS OR DISCREPANCIES BETWEEN THE ARCHITECTURAL DRAWINGS, CONSULTING PROFESSIONALS' DRAWINGS, SPECIFICATIONS OR EXISTING CONDITIONS. SHOULD THERE BE AN OMISSION OR DISCREPANCY BETWEEN SAID DRAWINGS AND SPECIFICATIONS, IT SHALL BE BROUGHT TO THE ENGINEER'S ATTENTION IN WRITING FOR CLARIFICATION PRIOR TO INSTALLATION OF SAID WORK.

5. THE CONTRACTOR SHALL NOTIFY THE ENGINEER IMMEDIATELY IF INFORMATION IS NOT SHOWN ON THE DRAWINGS, OR IS UNCLEAR.

6. THE CONTRACTOR SHALL VERIFY ALL DIMENSIONS, ELEVATIONS AND EXISTING CONDITIONS PRIOR TO STARTING WORK AND REPORT ANY DISCREPANCIES IN WRITING TO THE ENGINEER. ANY WORK INSTALLED IN CONFLICT WITH THE ARCHITECTURAL DRAWINGS SHALL BE CORRECTED BY THE CONTRACTOR AT NO ADDITIONAL COST TO THE DEPARTMENT.

7. THE CONTRACTOR SHALL BE RESPONSIBLE FOR THE ACCURATE PLACEMENT AND CONFIGURATION OF THE BUILDING ON THE SITE.

8. THE CONTRACTOR SHALL OBTAIN ALL NECESSARY PERMITS AND APPROVALS FOR ALL WORK.

9. THE CONTRACTOR SHALL BE RESPONSIBLE FOR SCHEDULING AND COORDINATING THE WORK FOR ALL UTILITIES AND SERVICES.

10. ALL TRADES TO COMPLY WITH ALL APPLICABLE STATE, HEALTH, SAFETY CODES, ORDINANCES, 2010 ADA STANDARDS FOR ACCESSIBLE DESIGN, TITLE II, REQUIREMENTS, ETC. & PROVIDE ACCEPTABLE MATERIALS & WORKMANSHIP TO CURRENT INDUSTRY STANDARDS.

11. WRITTEN DIMENSIONS TAKE PRECEDENCE OVER SCALE. DO NOT SCALE DRAWING: DIMENSIONS GOVERN, LARGE SCALE DETAILS
GOVERN OVER SMALLER SCALE DRAWINGS.

12. STRUCTURAL DIMENSIONS ARE TAKEN FROM COLUMN CENTER LINES TO FACE OF STRUCTURE OR CONCRETE. ARCHITECTURAL DIMENSIONS ARE TAKEN FROM FACE OF STUD TO FACE OF STUD OR TO FACE OF MASONRY, UNLESS OTHERWISE NOTED.

13. FINISH FLOOR ELEVATIONS ARE TO TOP OF CONCRETE SLAB OR PAVERS, UNLESS OTHERWISE NOTED.

14. CEILING HEIGHT DIMENSIONS ARE TO FINISHED SURFACES, UNLESS OTHERWISE NOTED.

15. 'TYPICAL (TYP.)' MEANS FOR ALL SIMILAR CONDITIONS, UNLESS OTHERWISE NOTED.

16. ALL DOOR SIZES SHOWN ON THE DOOR SCHEDULE ARE OPENING SIZES. ALLOWANCE FOR THRESHOLDS, ETC. SHALL BE DEDUCTED. FRAMES SHALL BE REINFORCED WHERE REQUIRED FOR CLOSERS, STOPS, AND HARDWARE.

17. CONTRACTOR SHALL PROVIDE AND INSTALL ALL STIFFENERS, BRACINGS, BLOCKING, BACKING, HANGERS, BACK-UP PLATES, AND SUPPORTING BRACKETS REQUIRED FOR THE INSTALLATION OF ALL CASEWORK, TOILET ACCESSORIES, FIXTURES, PARTITIONS, AND ALL WALL-MOUNTED OR SUSPENDED MECHANICAL, KITCHEN, ELECTRICAL OR MISC. EQUIPMENT, FURNISHINGS AND ART WORK.

18. CONTRACTOR SHALL VERIFY EXACT SIZES AND LOCATIONS OF ALL MECHANICAL EQUIPMENT PADS, BASE STRUCTURES, ROOF OPENINGS, AS WELL AS POWER, WATER, DRAIN INSTALLATIONS AND STRUCTURAL STEEL SUPPORT LOCATIONS WITH EQUIPMENT MANUFACTURERS BEFORE PROCEEDING WITH THE WORK. CHANGES TO ACCOMMODATE FIELD CONDITIONS OR APPROVED SUBSTITUTIONS SHALL BE MADE WITHOUT ADDITIONAL COST TO THE DEPARTMENT.

19. LOCATE CONTROL JOINTS IN MASONRY WHERE NOTED (CJ); REPORT ANY CONFLICTS TO ENGINEER PRIOR TO INSTALLATION.

20. FINISHED FLOOR ELEV. = 0'-0" UNLESS NOTED OTHERWISE.

21. REFER TO CIVIL, MECHANICAL & ELECTRICAL DRAWINGS TO VERIFY & COORDINATE ALL PENETRATIONS.

22. REFER TO STRUCTURAL DRAWING S00.001 FOR DESIGN AND WIND LOAD REQUIREMENTS.

23. CONSTRUCTION SHALL BE IN COMPLIANCE WITH 2010 ADA STANDARDS FOR ACCESSIBLE DESIGN, TITLE II. CONTRACTOR SHALL BE FAMILIAR WITH TOLERANCES ALLOWED BY ADAAG AND ENSURE WORK DONE FALLS WITHIN THESE TOLERANCES.

NOTICE: THE OFFICIAL RECORD OF THIS SHEET IS THE ELECTRONIC FILE SIGNED AND SEALED UNDER RULE 61G1-16.005, F.A.C.

REVISIONS					
DATE	BY	DESCRIPTION	DATE	BY	DESCRIPTION

MICHEAL K. CHATHAM, AIA FLORIDA AR 13635

HELMAN HURLEY CHARVAT PEACOCK / ARCHITECTS, INC.

120 North Orange Ave Orlando, FL 32801
P: 407 644 2656 F: 407 628 3269 www.HHCP.com
AA C000008

STATE OF FLORIDA
DEPARTMENT OF TRANSPORTATION

ROAD NO.	COUNTY	FINANCIAL PROJECT ID
CFRC P2S	VARIOUS	423446-9-52-01

CENTRAL FLORIDA COMMUTER RAIL TRANSIT (CFCRT) PHASE 2, SOUTH

ARCHITECTURAL GENERAL NOTES

SHEET NO. 62

DRAWING NO.

T00.014

NOTES:

1. USE FDOT TYPE II UNDERDRAIN, PER INDEX 286. FOR SIZING, LENGTH AND LOCATION SEE DRAINAGE PLAN AND PROFILE SHEETS.
2. BRIDGE APPROACH TIES, HIGHWAY GRADE CROSSING TIES AND PEDESTRIAN CROSSING TIES TO BE 9"x7"x10' TIMBER. ALL OTHER TIES TO BE 9"x7"x8'-6" TIMBER.
3. PROFILE GRADE LINE IS FROM THE LOW SIDE RAIL.

* 12" BALLAST (TYPICAL), 8" BALLAST MINIMUM

** TRACK CENTERLINE TO EDGE OF PLATFORM AT KISSIMMEE PLATFORM SHALL BE 5'-4" (+/- 0.0")

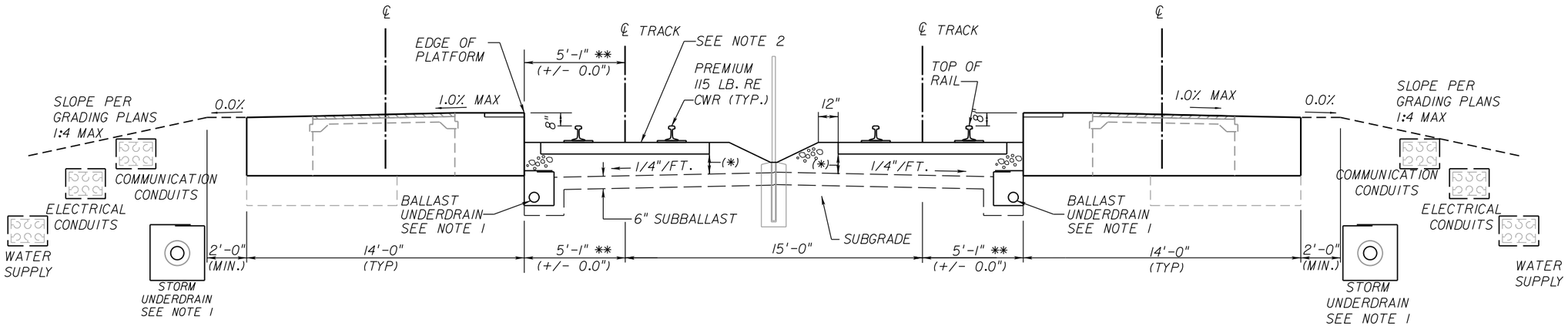

TYPICAL SECTION FOR PLATFORM ON DOUBLE TRACK

STA. 42289+78.75	TO	STA. 42292+78.75	(MEADOW WOODS)
STA. 42463+66.93	TO	STA. 42466+66.93	(OSCEOLA PARKWAY)
STA. 42647+46.91	TO	STA. 42650+47.23	(KISSIMMEE)
STA. 42947+45.28	TO	STA. 42950+45.28	(POINCIANA)

NOTICE: THE OFFICIAL RECORD OF THIS SHEET IS THE ELECTRONIC FILE SIGNED AND SEALED UNDER RULE 61G15-23.003, F.A.C.

REVISIONS

DATE	BY	DESCRIPTION	DATE	BY	DESCRIPTION

TRANSPORTATION
AECOM TECHNICAL SERVICES, Inc.
300 Colonial Center Pkwy, Suite 130
Lake Mary, FL. 32746
T 407.549.4200 F 407.549.4201
Certificate of Authorization No. 8115
DAVID S. BURWELL PE NO. 55853 www.aecom.com

STATE OF FLORIDA
DEPARTMENT OF TRANSPORTATION

ROAD NO.	COUNTY	FINANCIAL PROJECT ID
CFRC P2S	VARIOUS	423446-9-52-01

CENTRAL FLORIDA COMMUTER RAIL TRANSIT (CFCRT) PHASE 2 SOUTH

TYPICAL SECTIONS

SHEET NO. 71

PrinceK 5/22/2015 6:23:04 PM Q:\4234469520\roadway\TYPSRD01S.dgn

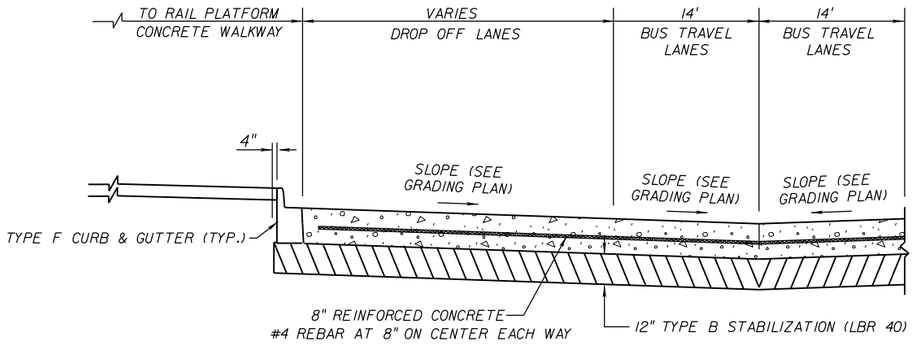

TYPICAL SECTION A-A

BUS DROP OFF

NEW CONSTRUCTION

8" REINFORCED CONCRETE PAVEMENT
12" TYPE B STABILIZATION (LBR 40)

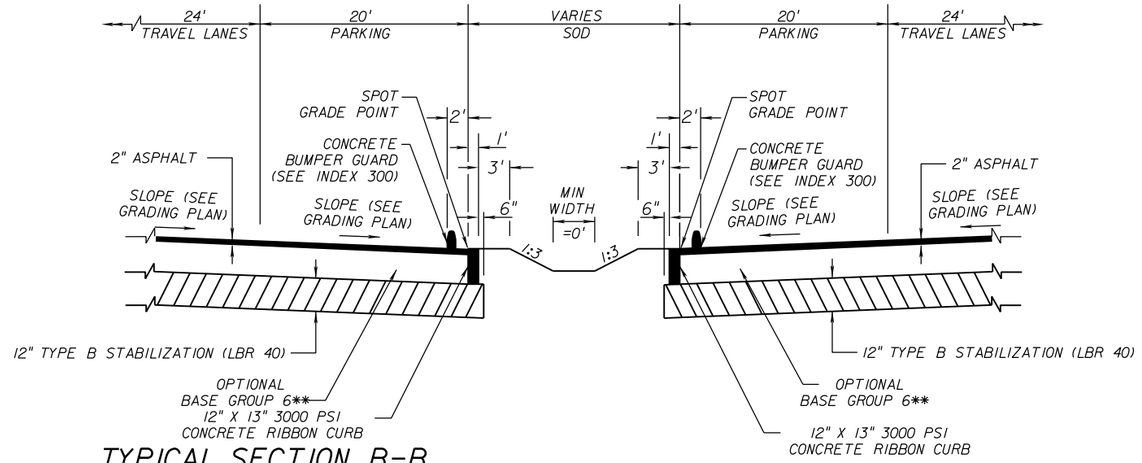

TYPICAL SECTION B-B

AUTOMOBILE PARKING

NEW CONSTRUCTION

2" ASPHALT CONCRETE PAVEMENT
TYPE SP STRUCTURAL COURSE (TRAFFIC C)(2")
OPTIONAL BASE GROUP 6**
12" TYPE B STABILIZATION (LBR 40)
(** EXCLUDING GRADED AGGREGATE BASE AND TYPE B-12.5)

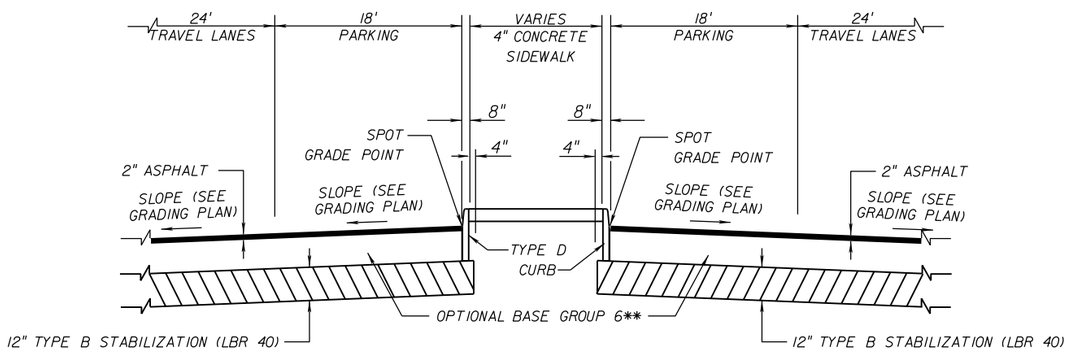

TYPICAL SECTION C-C

AUTOMOBILE PARKING

NEW CONSTRUCTION

2" ASPHALT CONCRETE PAVEMENT
TYPE SP STRUCTURAL COURSE (TRAFFIC C)(2")
OPTIONAL BASE GROUP 6**
12" TYPE B STABILIZATION (LBR 40)
(** EXCLUDING GRADED AGGREGATE BASE AND TYPE B-12.5)

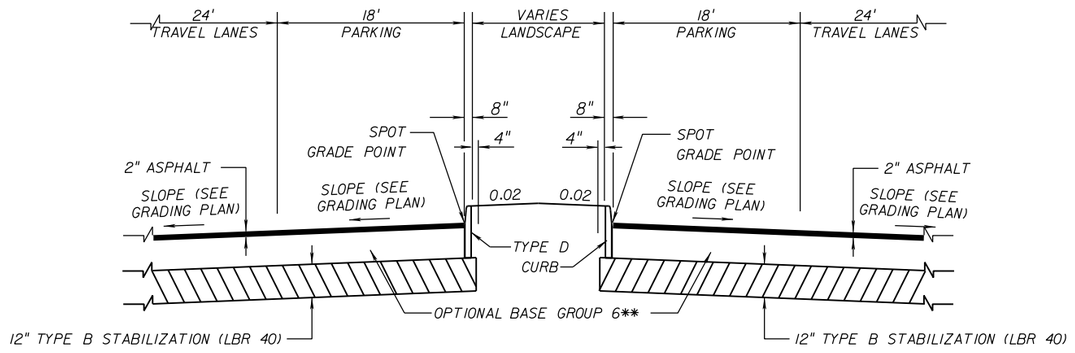

TYPICAL SECTION D-D

AUTOMOBILE PARKING

NEW CONSTRUCTION

2" ASPHALT CONCRETE PAVEMENT
TYPE SP STRUCTURAL COURSE (TRAFFIC C)(2")
OPTIONAL BASE GROUP 6**
12" TYPE B STABILIZATION (LBR 40)
(** EXCLUDING GRADED AGGREGATE BASE AND TYPE B-12.5)

NOTICE: THE OFFICIAL RECORD OF THIS SHEET IS THE ELECTRONIC FILE SIGNED AND SEALED UNDER RULE 61G15-23.003, F.A.C.

REVISIONS					
DATE	BY	DESCRIPTION	DATE	BY	DESCRIPTION

TRANSPORTATION
AECOM TECHNICAL SERVICES, Inc.
300 Colonial Center Pkwy, Suite 130
Lake Mary, FL. 32746
T 407.549.4200 F 407.549.4201
Certificate of Authorization No. 8115
DAVID S. BURWELL PE NO. 55853 www.aecom.com

STATE OF FLORIDA
DEPARTMENT OF TRANSPORTATION

ROAD NO.	COUNTY	FINANCIAL PROJECT ID
CFRC P2S	VARIOUS	423446-9-52-01

CENTRAL FLORIDA COMMUTER RAIL TRANSIT (CFCRT) PHASE 2 SOUTH

TYPICAL SECTIONS

SHEET NO. 74

DRAWING NO.
C00.003B

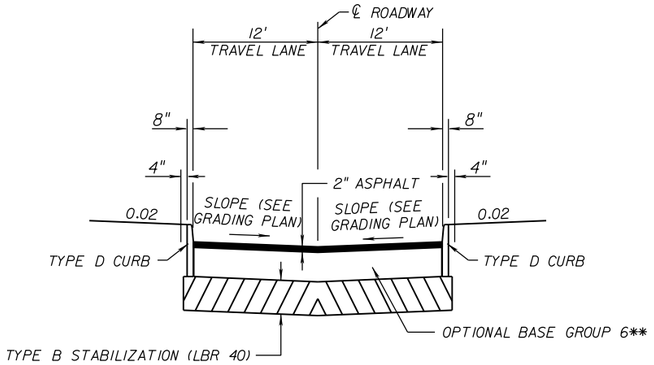

TYPICAL SECTION E-E

ACCESS ROAD

NEW CONSTRUCTION

2" ASPHALT CONCRETE PAVEMENT
TYPE SP STRUCTURAL COURSE (TRAFFIC C)(2")
OPTIONAL BASE GROUP 6**
12" TYPE B STABILIZATION (LBR 40)
(** EXCLUDING GRADED AGGREGATE BASE AND TYPE B-12.5)

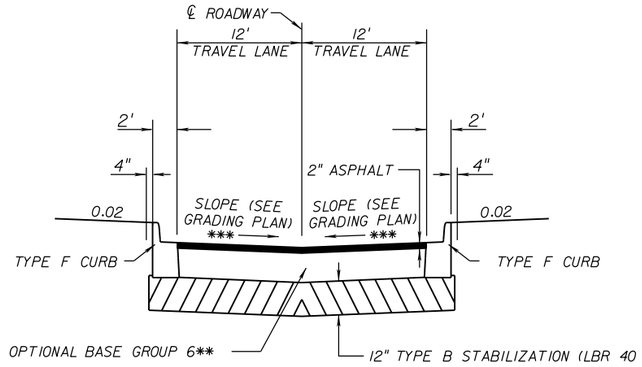

TYPICAL SECTION F-F

ACCESS ROAD

NEW CONSTRUCTION

2" ASPHALT CONCRETE PAVEMENT
TYPE SP STRUCTURAL COURSE (TRAFFIC C)(2")
OPTIONAL BASE GROUP 6**
12" TYPE B STABILIZATION (LBR 40)
(** EXCLUDING GRADED AGGREGATE BASE AND TYPE B-12.5)
(*** CROWN OR INVERSE CROWN SEE GRADING PLAN)

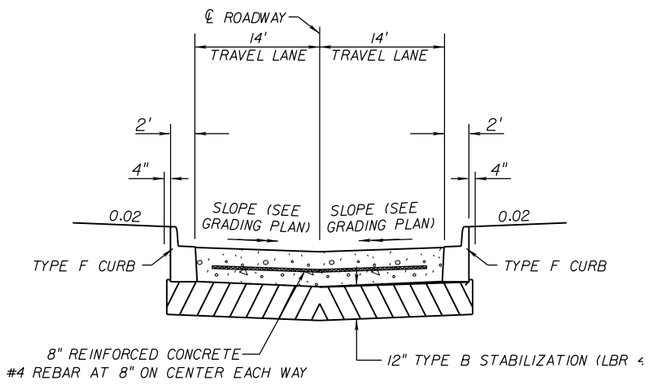

TYPICAL SECTION G-G

BUS ACCESS ROAD

NEW CONSTRUCTION

8" REINFORCED CONCRETE PAVEMENT
12" TYPE B STABILIZATION (LBR 40)

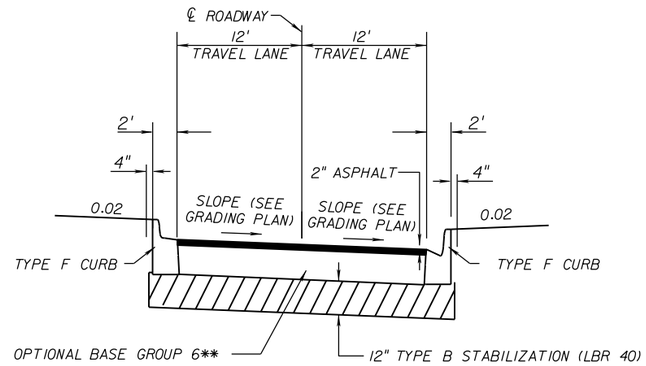

TYPICAL SECTION I-I

ACCESS ROAD

NEW CONSTRUCTION

2" ASPHALT CONCRETE PAVEMENT
TYPE SP STRUCTURAL COURSE (TRAFFIC C)(2")
OPTIONAL BASE GROUP 6**
12" TYPE B STABILIZATION (LBR 40)
(** EXCLUDING GRADED AGGREGATE BASE AND TYPE B-12.5)

NOTICE: THE OFFICIAL RECORD OF THIS SHEET IS THE ELECTRONIC FILE SIGNED AND SEALED UNDER RULE 61G15-23.003, F.A.C.

REVISIONS					
DATE	BY	DESCRIPTION	DATE	BY	DESCRIPTION

TRANSPORTATION
AECOM TECHNICAL SERVICES, Inc.
300 Colonial Center Pkwy, Suite 130
Lake Mary, FL 32746
T 407.549.4200 F 407.549.4201
Certificate of Authorization No. 8115
DAVID S. BURWELL PE NO. 55853 www.aecom.com

STATE OF FLORIDA
DEPARTMENT OF TRANSPORTATION

ROAD NO.	COUNTY	FINANCIAL PROJECT ID
CFRC P2S	VARIOUS	423446-9-52-01

CENTRAL FLORIDA COMMUTER RAIL TRANSIT (CFCRT) PHASE 2 SOUTH

TYPICAL SECTIONS

SHEET NO.
75

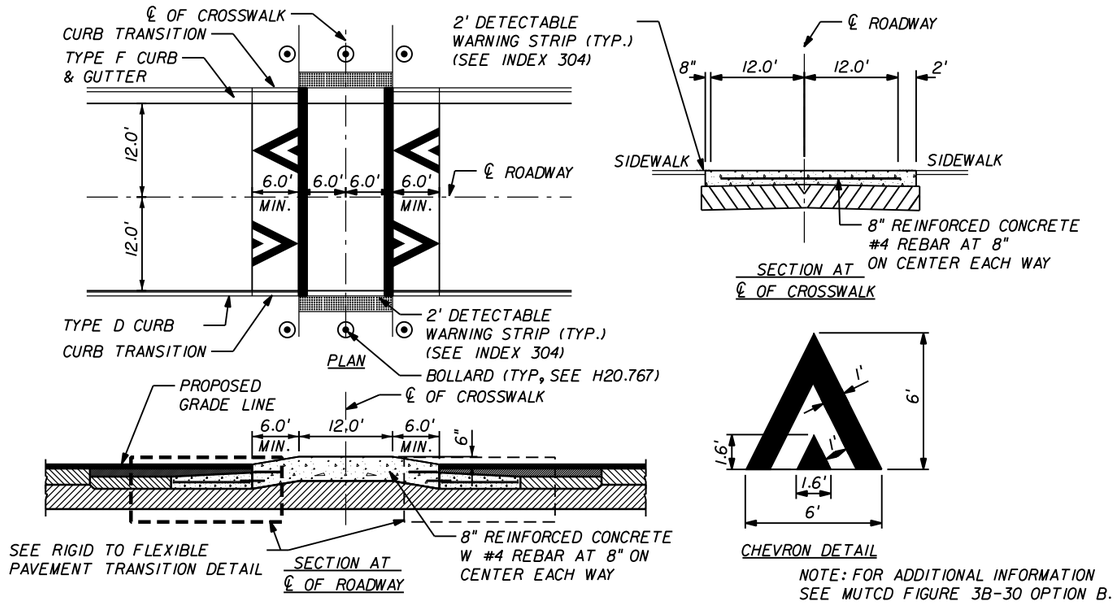

CROSSWALK/SPEED TABLE DETAIL N.T.S.

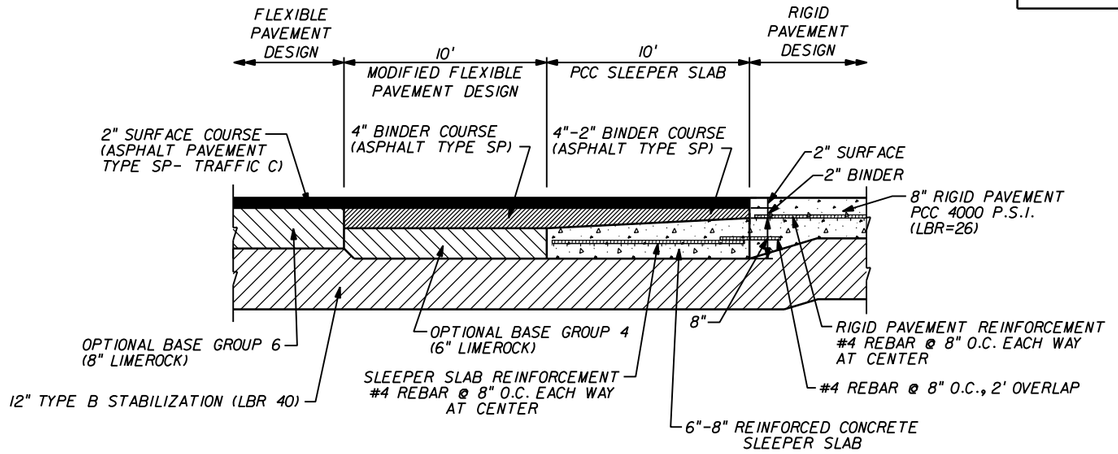

RIGID TO FLEXIBLE PAVEMENT TRANSITION DETAIL

N.T.S.

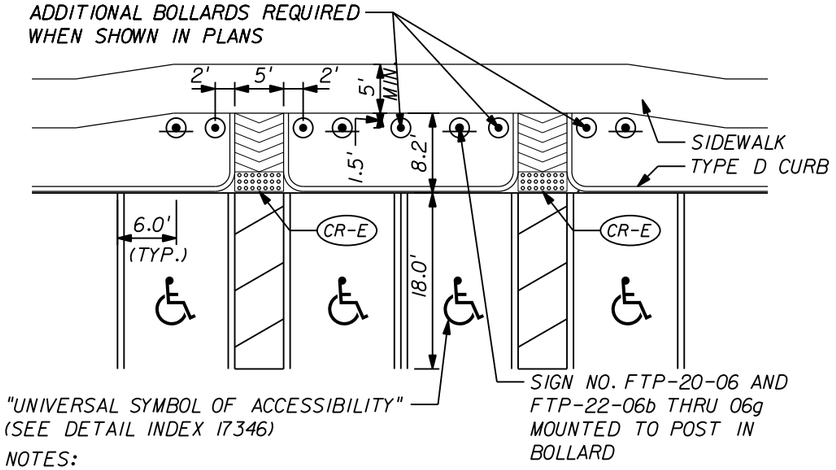

NOTES:

1. ALL PAVEMENT MARKINGS PER FDOT INDEX 17346
2. CONSTRUCTION SHALL BE IN COMPLIANCE WITH 2010 ADA STANDARDS FOR ACCESSIBLE DESIGN, TITLE II.

ACCESSIBLE PARKING DETAIL (N.T.S.)

NOTICE: THE OFFICIAL RECORD OF THIS SHEET IS THE ELECTRONIC FILE SIGNED AND SEALED UNDER RULE 61G15-23.003, F.A.C.

REVISIONS					
DATE	BY	DESCRIPTION	DATE	BY	DESCRIPTION

TRANSPORTATION
AECOM TECHNICAL SERVICES, Inc.
300 Colonial Center Pkwy, Suite 130
Lake Mary, FL 32746
T 407.549.4200 F 407.549.4201
Certificate of Authorization No. 8115
DAVID S. BURWELL PE NO. 55853 www.aecom.com

STATE OF FLORIDA
DEPARTMENT OF TRANSPORTATION

ROAD NO.	COUNTY	FINANCIAL PROJECT ID
CFRC P2S	VARIOUS	423446-9-52-01

CENTRAL FLORIDA COMMUTER RAIL TRANSIT (CFCRT) PHASE 2 SOUTH

TYPICAL SITE DETAILS

SHEET NO. 76

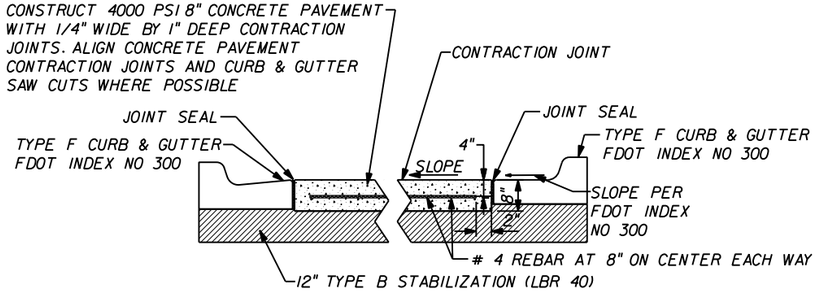

TYPICAL BUS DRIVEWAY CONCRETE PAVEMENT SECTION

CONTRACTION JOINT
CURB & GUTTER JOINT

N.T.S.

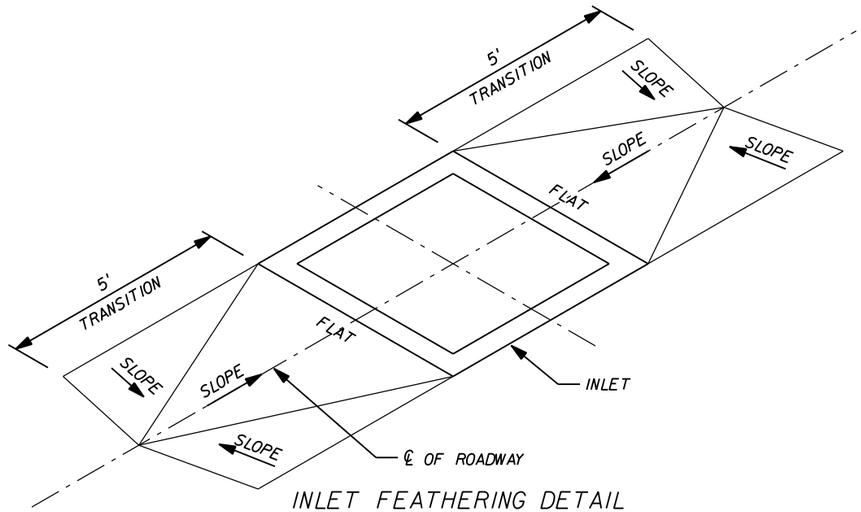

INLET FEATHERING DETAIL

N.T.S.

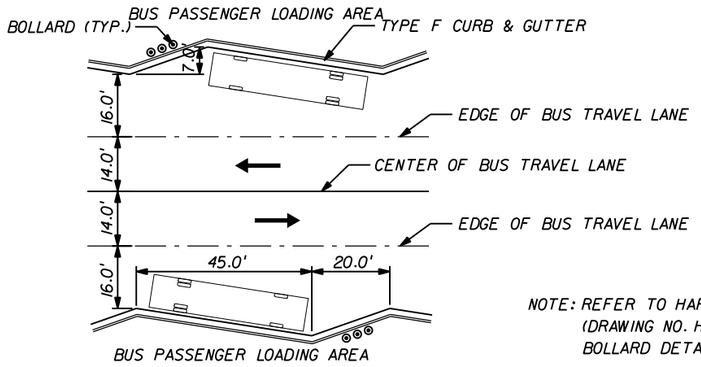

NOTE: REFER TO HARDSCAPE DETAIL (DRAWING NO. H20.727) FOR BOLLARD DETAIL.

BUS BAY DETAIL

N.T.S.

NOTICE: THE OFFICIAL RECORD OF THIS SHEET IS THE ELECTRONIC FILE SIGNED AND SEALED UNDER RULE 61G15-23.003, F.A.C.

REVISIONS					
DATE	BY	DESCRIPTION	DATE	BY	DESCRIPTION

TRANSPORTATION
AECOM TECHNICAL SERVICES, Inc.
300 Colonial Center Pkwy, Suite 130
Lake Mary, FL. 32746
T 407.549.4200 F 407.549.4201
Certificate of Authorization No. 8115
DAVID S. BURWELL PE NO. 55853 www.aecom.com

STATE OF FLORIDA
DEPARTMENT OF TRANSPORTATION

ROAD NO.	COUNTY	FINANCIAL PROJECT ID
CFRC P2S	VARIOUS	423446-9-52-01

CENTRAL FLORIDA COMMUTER RAIL TRANSIT (CFCRT) PHASE 2 SOUTH

TYPICAL SITE DETAILS

SHEET NO. 77

DRAWING NO.
C00.003E

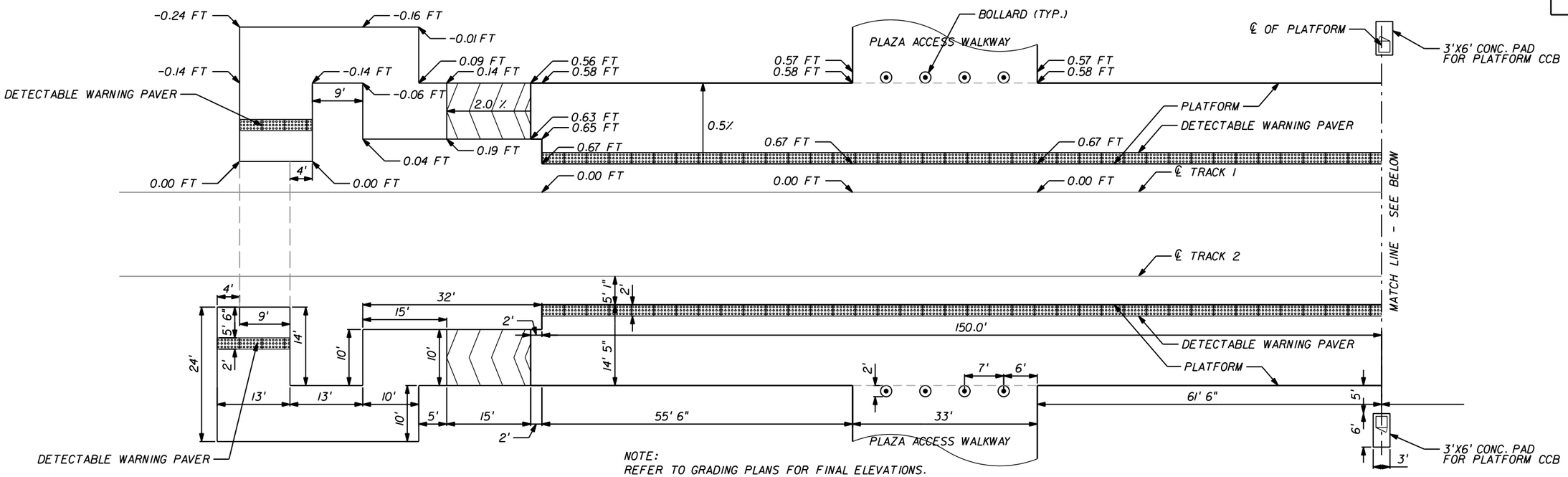

NOTE:
REFER TO GRADING PLANS FOR FINAL ELEVATIONS.

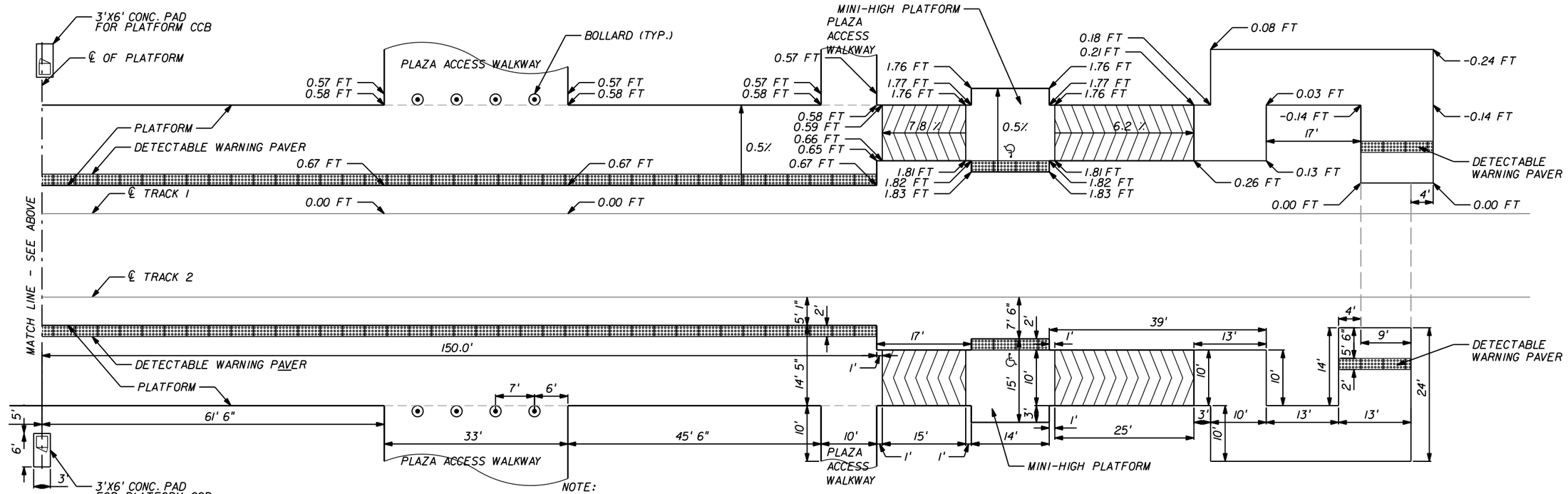

NOTE:
REFER TO GRADING PLANS FOR FINAL ELEVATIONS.

REVISIONS					
DATE	BY	DESCRIPTION	DATE	BY	DESCRIPTION

TRANSPORTATION
AECOM TECHNICAL SERVICES, Inc.
300 Colonial Center Pkwy, Suite 130
Lake Mary, FL. 32746
T 407.549.4200 F 407.549.4201
Certificate of Authorization No. 8115
DAVID S. BURWELL PE NO. 55853 www.aecom.com

STATE OF FLORIDA
DEPARTMENT OF TRANSPORTATION

ROAD NO.	COUNTY	FINANCIAL PROJECT ID
CFRC P2S	VARIOUS	423446-9-52-01

CENTRAL FLORIDA COMMUTER RAIL TRANSIT (CFCRT) PHASE 2 SOUTH

TYPICAL SITE DETAILS

SHEET NO.
78

NOTICE: THE OFFICIAL RECORD OF THIS SHEET IS THE ELECTRONIC FILE SIGNED AND SEALED UNDER RULE 61G15-23.003, F.A.C.

PrinceK 5/19/2015 3:03:50 PM Q:\4234469520I\roadway\C00-003E - Details.dgn

SIGN NAME	R3-11mod	STATION(S)	
QUANTITY	6	1	All
WIDTH	2'-6"	2	
HEIGHT	3'-6"	3	
BORDER WIDTH	0.75"	4	
BORDER RADII	1.88"	5	
PANEL COLOR	Black, White		
LEGEND	Black		
BORDER	Black		

SYMBOL(S)	ANGLE	X	Y	WID	HT

SIGN NUMBER	CLEARANCE EDGE OF LANE	COLUMN SIZE		AVERAGE LENGTH

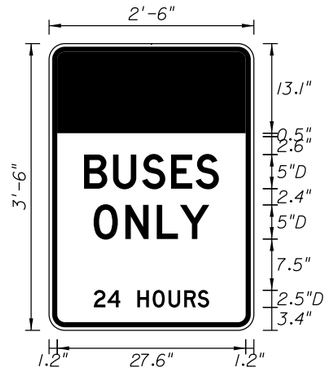

SIGN NAME		STATION(S)	
QUANTITY		1	
WIDTH		2	
HEIGHT		3	
BORDER WIDTH		4	
BORDER RADII		5	
PANEL COLOR			
LEGEND			
BORDER			

SYMBOL(S)	ANGLE	X	Y	WID	HT

SIGN NUMBER	CLEARANCE EDGE OF LANE	COLUMN SIZE		AVERAGE LENGTH

DRAWING NO.

C00.004A

COPY	B	U	S	E	S		L																		
SPACE	5.1	9.4	13.6	17.9	21.5		19.8																		
COPY	O	N	L	Y		L																			
SPACE	6.5	11.2	15.8	19.2		17																			
COPY	2	4		H	O	U	R	S		L															
SPACE	6.6	8.6	10.7	12.9	15.2	17.5	19.8	21.8		16.9															
COPY																									
SPACE																									
COPY																									
SPACE																									
COPY																									
SPACE																									

SIGN NAME		STATION(S)	
QUANTITY		1	
WIDTH		2	
HEIGHT		3	
BORDER WIDTH		4	
BORDER RADII		5	
PANEL COLOR			
LEGEND			
BORDER			

SYMBOL(S)	ANGLE	X	Y	WID	HT

SIGN NUMBER	CLEARANCE EDGE OF LANE	COLUMN SIZE		AVERAGE LENGTH

SIGN NAME		STATION(S)	
QUANTITY		1	
WIDTH		2	
HEIGHT		3	
BORDER WIDTH		4	
BORDER RADII		5	
PANEL COLOR			
LEGEND			
BORDER			

SYMBOL(S)	ANGLE	X	Y	WID	HT

SIGN NUMBER	CLEARANCE EDGE OF LANE	COLUMN SIZE		AVERAGE LENGTH

NOTICE: THE OFFICIAL RECORD OF THIS SHEET IS THE ELECTRONIC FILE SIGNED AND SEALED UNDER RULE 61G15-23.003, F.A.C.

REVISIONS

DATE	BY	DESCRIPTION	DATE	BY	DESCRIPTION

TRANSPORTATION
AECOM TECHNICAL SERVICES, Inc.
300 Colonial Center Pkwy, Suite 130
Lake Mary, FL. 32746
T 407.549.4200 F 407.549.4201
Certificate of Authorization No. 8115
DAVID S. BURWELL PE NO. 55853 www.aecom.com

STATE OF FLORIDA
DEPARTMENT OF TRANSPORTATION

ROAD NO.	COUNTY	FINANCIAL PROJECT ID
CFRC P2S	VARIOUS	423446-9-52-01

CENTRAL FLORIDA COMMUTER RAIL TRANSIT (CFCRT) PHASE 2 SOUTH

GUIDESIGN WORK SHEET

SHEET NO. 79

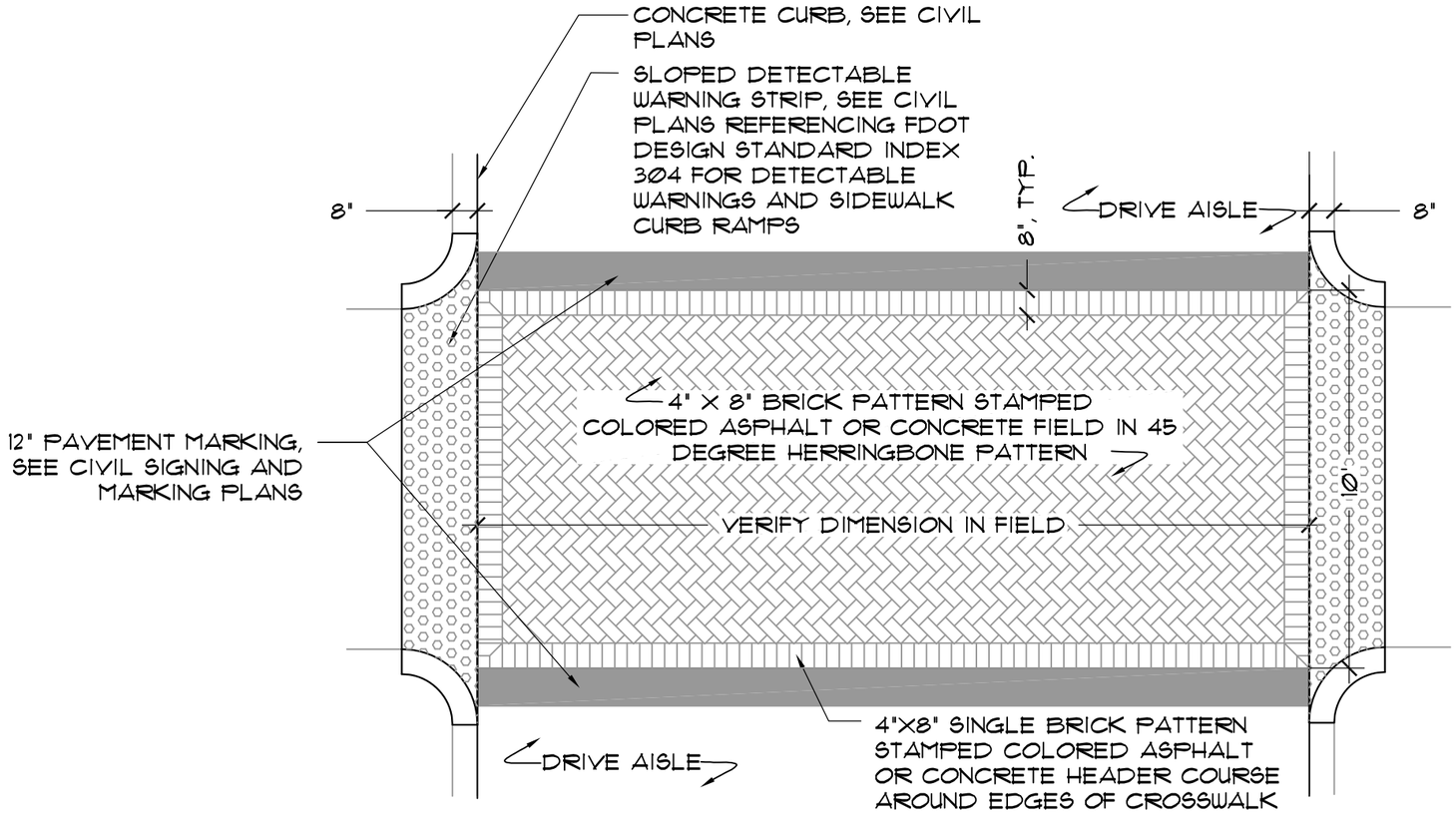



STAMPED COLORED ASPHALT

NOTES:
+ SEE SPECIFICATIONS FOR STAMPED COLORED ASPHALT PAVING, SECTION 523. INSTALL PER MANUFACTURER'S SPECIFICATIONS.
+ SEE SPECIFICATIONS FOR STAMPED COLORED CONCRETE, SECTION 03355. INSTALL PER MANUFACTURER'S SPECIFICATIONS.
+ SEE SPECIFICATIONS FOR SAMPLES TO BE PROVIDED FOR ENGINEER'S APPROVAL.
+ ASPHALT CROSSWALK UTILIZED FOR AT GRADE PEDESTRIAN CROSSWALKS.
+ CONCRETE CROSSWALK UTILIZED FOR RAISED PEDESTRIAN CROSSWALKS.
+ 2% MAX. SLOPE AT CROSSWALK AREAS.

1 / H20.701 **STAMPED COLORED ASPHALT OR CONCRETE CROSSWALK** (MEADOW WOODS, OSCEOLA, KISSIMMEE, POINCIANA)
SCALE: 1/4" = 1'-0"

PLAN

NOTICE: THE OFFICIAL RECORD OF THIS SHEET IS THE ELECTRONIC FILE SIGNED AND SEALED UNDER RULE 61G10-11.011, F.A.C.

REVISIONS					
DATE	BY	DESCRIPTION	DATE	BY	DESCRIPTION

Christina E. Hite, RLA #1340
DIX.HITE + PARTNERS
150 W. JESSUP AVENUE
LONGWOOD, FLORIDA
TEL 407.667.1777
FAX 407.667.1779
Certificate of Authorization No. LC0000358

STATE OF FLORIDA
DEPARTMENT OF TRANSPORTATION

ROAD NO.	COUNTY	FINANCIAL PROJECT ID
CFRC P2S	VARIOUS	423446-9-52-01

CENTRAL FLORIDA COMMUTER RAIL TRANSIT (CFCRT) PHASE 2 SOUTH

HARDSCAPE DETAILS
PAVING DETAILS

SHEET NO. 80

DRAWING NO.
H20.702

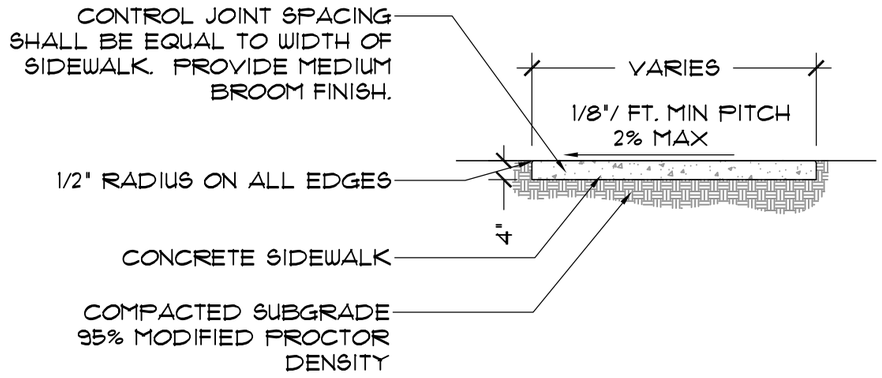

SECTION A-A1
SCALE: 3/8" = 1'-0"

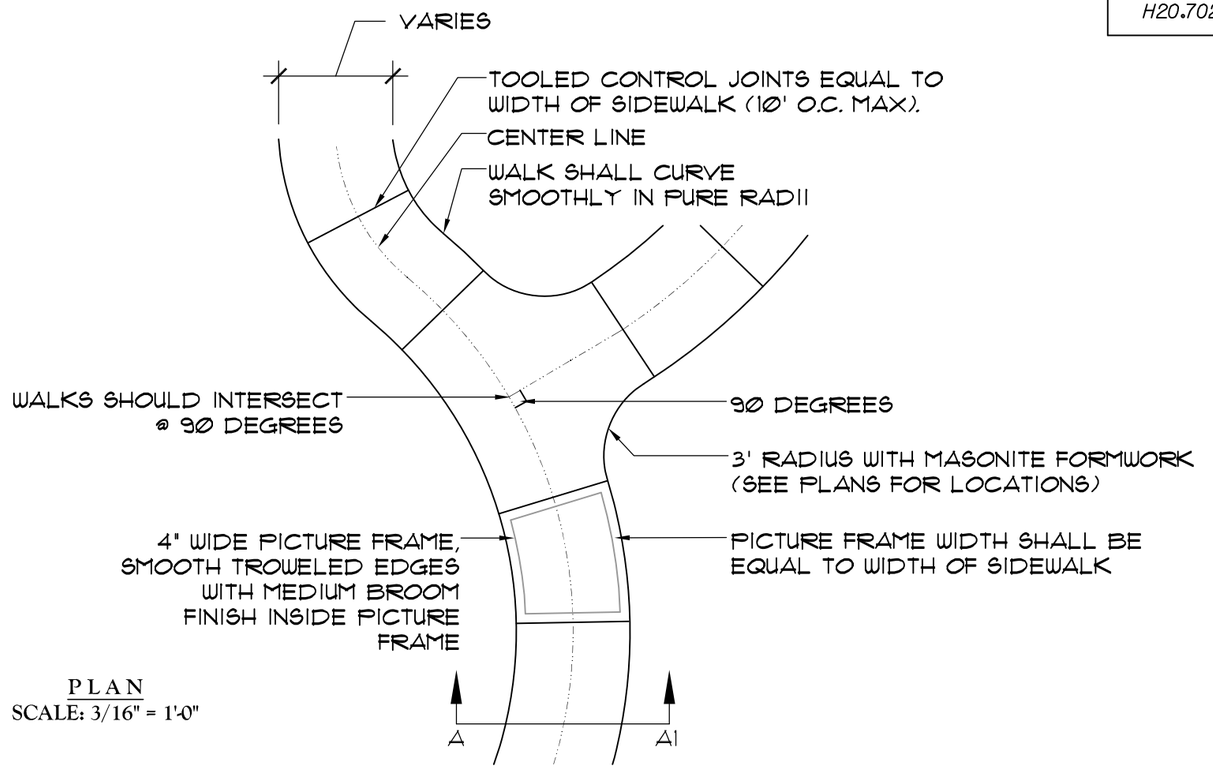

PLAN
SCALE: 3/16" = 1'-0"

1 H20.702 TYPICAL CONCRETE SIDEWALK (MEADOW WOODS, OSCEOLA, KISSIMMEE, POINCIANA)

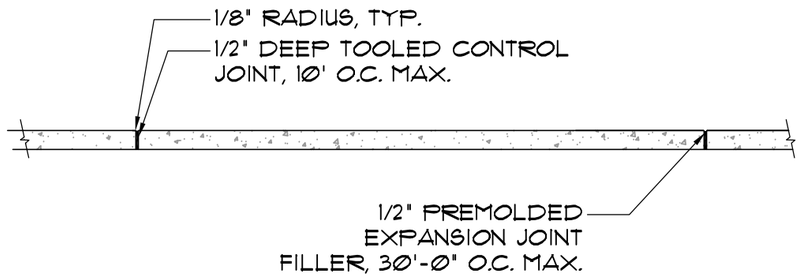

SECTION - FIELD JOINTS
SCALE: 3/8" = 1'-0"

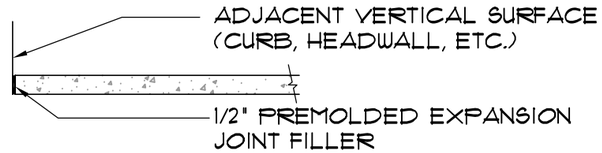

SECTION - END JOINT
SCALE: 3/8" = 1'-0"

2 H20.702 TYPICAL CONCRETE SIDEWALK (MEADOW WOODS, OSCEOLA, KISSIMMEE, POINCIANA)

SCALE: 3/8" = 1'-0"

REVISIONS					
DATE	BY	DESCRIPTION	DATE	BY	DESCRIPTION

Christina E. Hite, RLA #1340
DIX.HITE + PARTNERS
150 W. JESSUP AVENUE
LONGWOOD, FLORIDA
TEL 407.667.1777
FAX 407.667.1779
Certificate of Authorization No. LC0000358

STATE OF FLORIDA
DEPARTMENT OF TRANSPORTATION

ROAD NO.	COUNTY	FINANCIAL PROJECT ID
CFRC P2S	VARIOUS	423446-9-52-01

CENTRAL FLORIDA COMMUTER RAIL TRANSIT (CFCRT) PHASE 2 SOUTH

HARDSCAPE DETAILS
PAVING DETAILS

SHEET NO. 81

NOTICE: THE OFFICIAL RECORD OF THIS SHEET IS THE ELECTRONIC FILE SIGNED AND SEALED UNDER RULE 61G10-11.011, F.A.C.

DRAWING NO.
H20.703

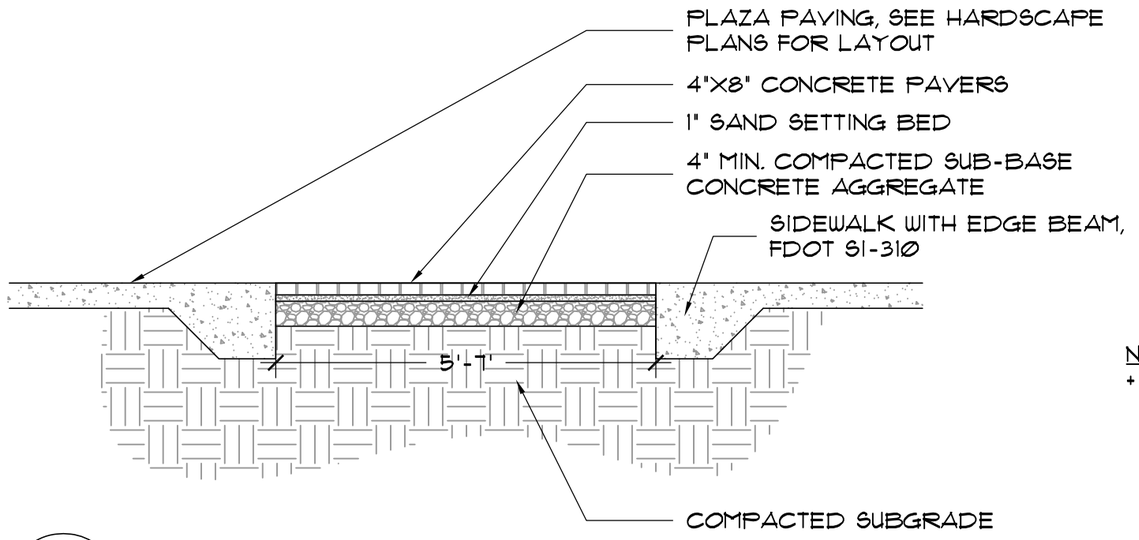

NOTE:
+ SEE SPECIFICATIONS FOR SAMPLES TO BE PROVIDED FOR ENGINEER'S APPROVAL, SECTION 02780 - UNIT PAVERS.

1 / H20.703 **CONCRETE PAVER BAND AT PLAZA** (MEADOW WOODS)
SCALE: 1/2" = 1'-0"

SECTION

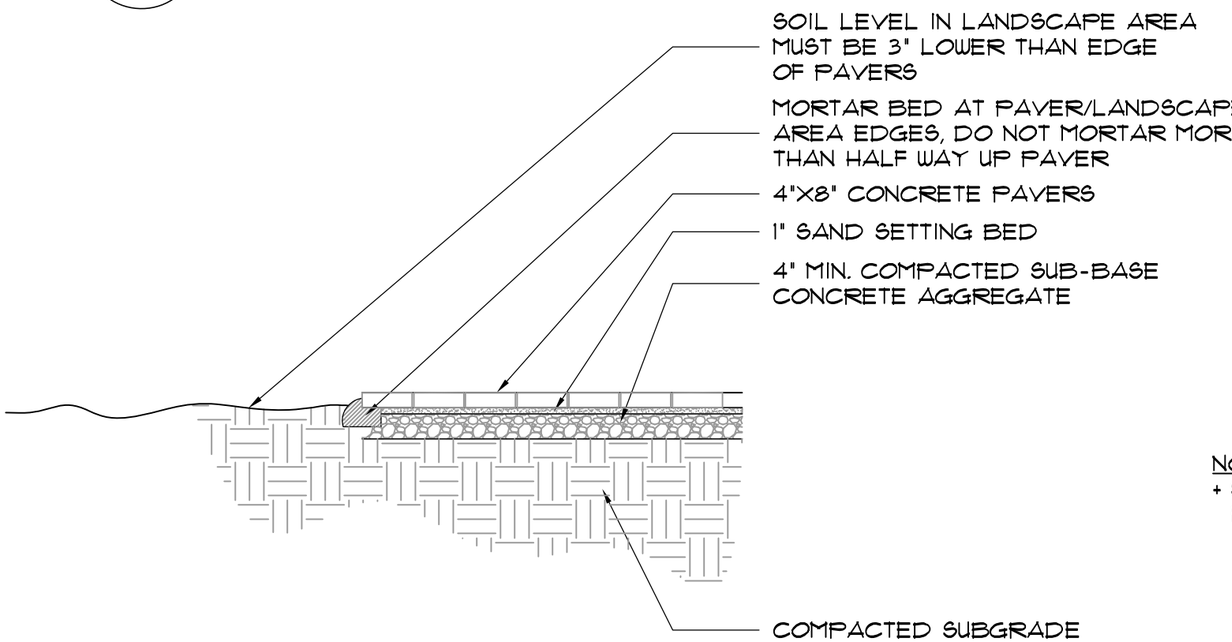

NOTE:
+ SEE SPECIFICATIONS FOR SAMPLES TO BE PROVIDED FOR ENGINEER'S APPROVAL, SECTION 02780 - UNIT PAVERS.

2 / H20.703 **CONCRETE PAVER BAND AT PLAZA EDGE** (MEADOW WOODS)
SCALE: 1/2" = 1'-0"

SECTION

REVISIONS					
DATE	BY	DESCRIPTION	DATE	BY	DESCRIPTION

Christina E. Hite, RLA #1340
DIX.HITE + PARTNERS
150 W. JESSUP AVENUE
LONGWOOD, FLORIDA
TEL 407.667.1777
FAX 407.667.1779
Certificate of Authorization No. LC0000358

STATE OF FLORIDA
DEPARTMENT OF TRANSPORTATION

ROAD NO.	COUNTY	FINANCIAL PROJECT ID
CFRC P2S	ORANGE	423446-9-52-01

CENTRAL FLORIDA COMMUTER RAIL TRANSIT (CFCRT) PHASE 2 SOUTH

HARDSCAPE DETAILS
PAVING DETAILS

SHEET NO. 82

NOTICE: THE OFFICIAL RECORD OF THIS SHEET IS THE ELECTRONIC FILE SIGNED AND SEALED UNDER RULE 61G10-11.011, F.A.C.

DRAWING NO.
H20.704

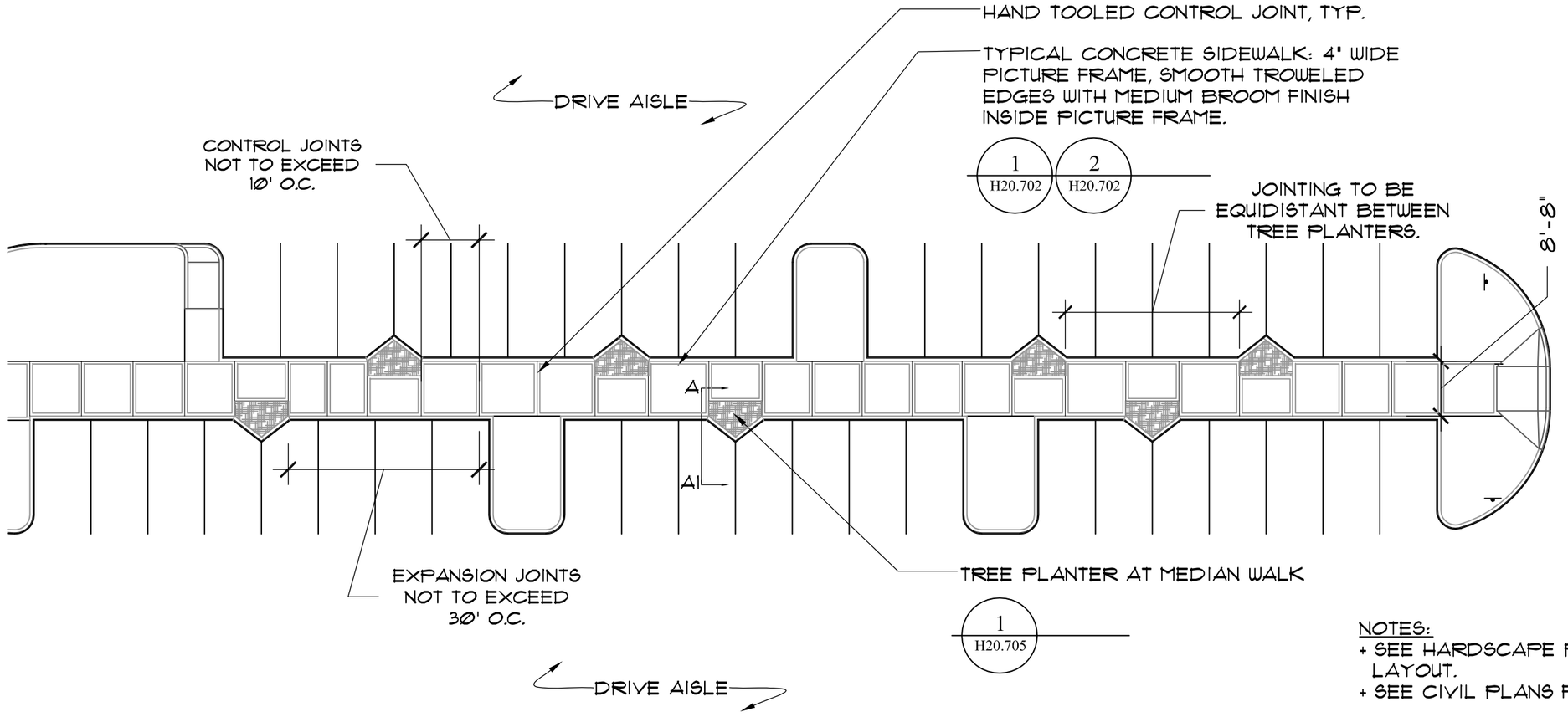

NOTES:
+ SEE HARDSCAPE PLANS FOR PARKING MEDIAN LAYOUT.
+ SEE CIVIL PLANS FOR GRADES.

1 / H20.704 **TYPICAL PAVEMENT AT MEDIAN WALK** (MEADOW WOODS)
SCALE: 1" = 20'-0"

PLAN

REVISIONS					
DATE	BY	DESCRIPTION	DATE	BY	DESCRIPTION

Christina E. Hite, RLA #1340
DIX.HITE + PARTNERS
150 W. JESSUP AVENUE
LONGWOOD, FLORIDA
TEL 407.667.1777
FAX 407.667.1779
Certificate of Authorization No. LC0000358

STATE OF FLORIDA
DEPARTMENT OF TRANSPORTATION

ROAD NO.	COUNTY	FINANCIAL PROJECT ID
CFRC P2S	ORANGE	423446-9-52-01

CENTRAL FLORIDA COMMUTER RAIL TRANSIT (CFCRT) PHASE 2 SOUTH

HARDSCAPE DETAILS
PAVING DETAILS

SHEET NO. 83

NOTICE: THE OFFICIAL RECORD OF THIS SHEET IS THE ELECTRONIC FILE SIGNED AND SEALED UNDER RULE 61G10-11.011, F.A.C.

DRAWING NO.
H20.705

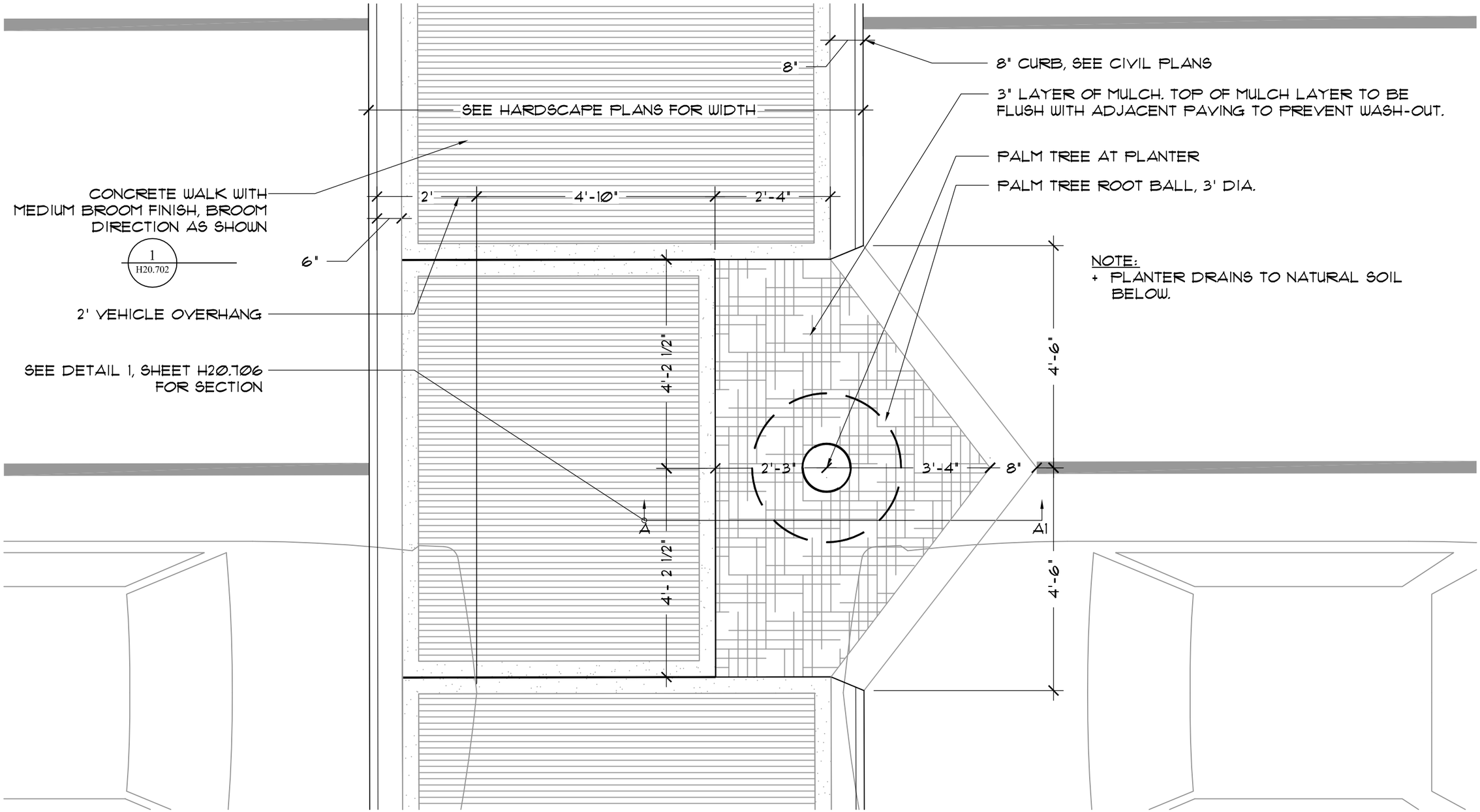

1
H20.705

PALM PLANTER AT MEDIAN WALK (MEADOW WOODS)

SCALE: 1/2" = 1'-0"

PLAN

REVISIONS					
DATE	BY	DESCRIPTION	DATE	BY	DESCRIPTION

Christina E. Hite, RLA #1340
DIX.HITE + PARTNERS
150 W. JESSUP AVENUE
LONGWOOD, FLORIDA
TEL 407.667.1777
FAX 407.667.1779
Certificate of Authorization No. LC0000358

STATE OF FLORIDA DEPARTMENT OF TRANSPORTATION		
ROAD NO.	COUNTY	FINANCIAL PROJECT ID
CFRC P2S	ORANGE	423446-9-52-01

CENTRAL FLORIDA COMMUTER RAIL TRANSIT (CFCRT) PHASE 2 SOUTH

HARDSCAPE DETAILS
PAVING DETAILS

SHEET NO. 84

NOTICE: THE OFFICIAL RECORD OF THIS SHEET IS THE ELECTRONIC FILE SIGNED AND SEALED UNDER RULE 61G10-11.011, F.A.C.

DRAWING NO.
H20.706

NOTES:
+ PALM TREES TO BE PLANTED AT ORIGINAL ROOT BALL DEPTHS. DO NOT BACKFILL ONTO PALM TRUNK.
+ PLANTER DRAINS TO NATURAL SOIL BELOW.
+ SEE SPECIFICATIONS FOR SAMPLES TO BE PROVIDED TO ENGINEER FOR APPROVAL.

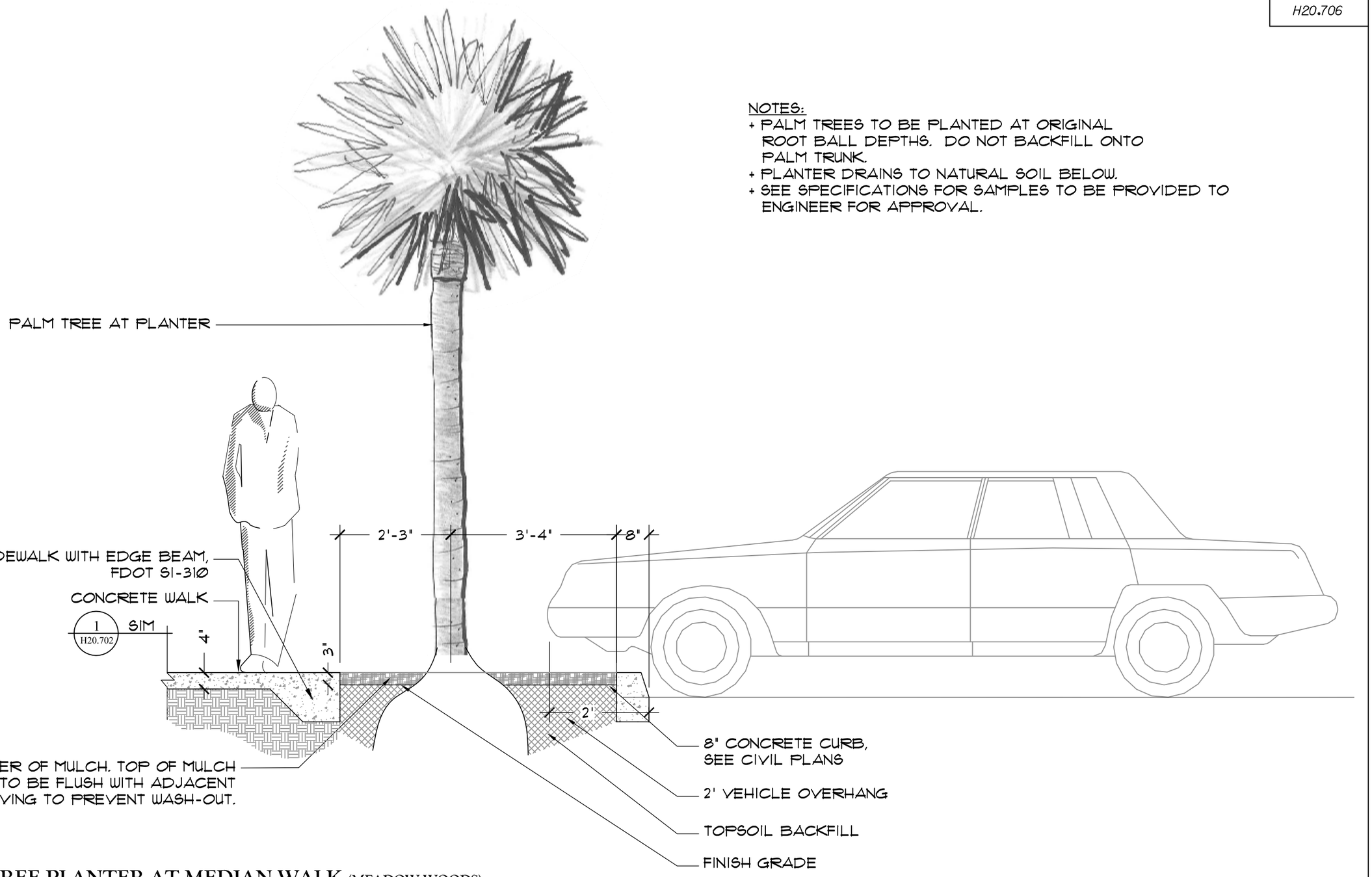

1 / H20.706 **TREE PLANTER AT MEDIAN WALK** (MEADOW WOODS)
SCALE: 1/2" = 1'-0"

SECTION A-A1

NOTICE: THE OFFICIAL RECORD OF THIS SHEET IS THE ELECTRONIC FILE SIGNED AND SEALED UNDER RULE 61G10-11.011, F.A.C.

REVISIONS					
DATE	BY	DESCRIPTION	DATE	BY	DESCRIPTION

Christina E. Hite, RLA #1340
DIX.HITE + PARTNERS
150 W. JESSUP AVENUE
LONGWOOD, FLORIDA
TEL 407.667.1777
FAX 407.667.1779
Certificate of Authorization No. LC0000358

STATE OF FLORIDA
DEPARTMENT OF TRANSPORTATION

ROAD NO.	COUNTY	FINANCIAL PROJECT ID
CFRC P2S	ORANGE	423446-9-52-01

CENTRAL FLORIDA COMMUTER RAIL TRANSIT (CFCRT) PHASE 2 SOUTH

HARDSCAPE DETAILS
PAVING DETAILS

SHEET NO. 85

DRAWING NO.
H20.707

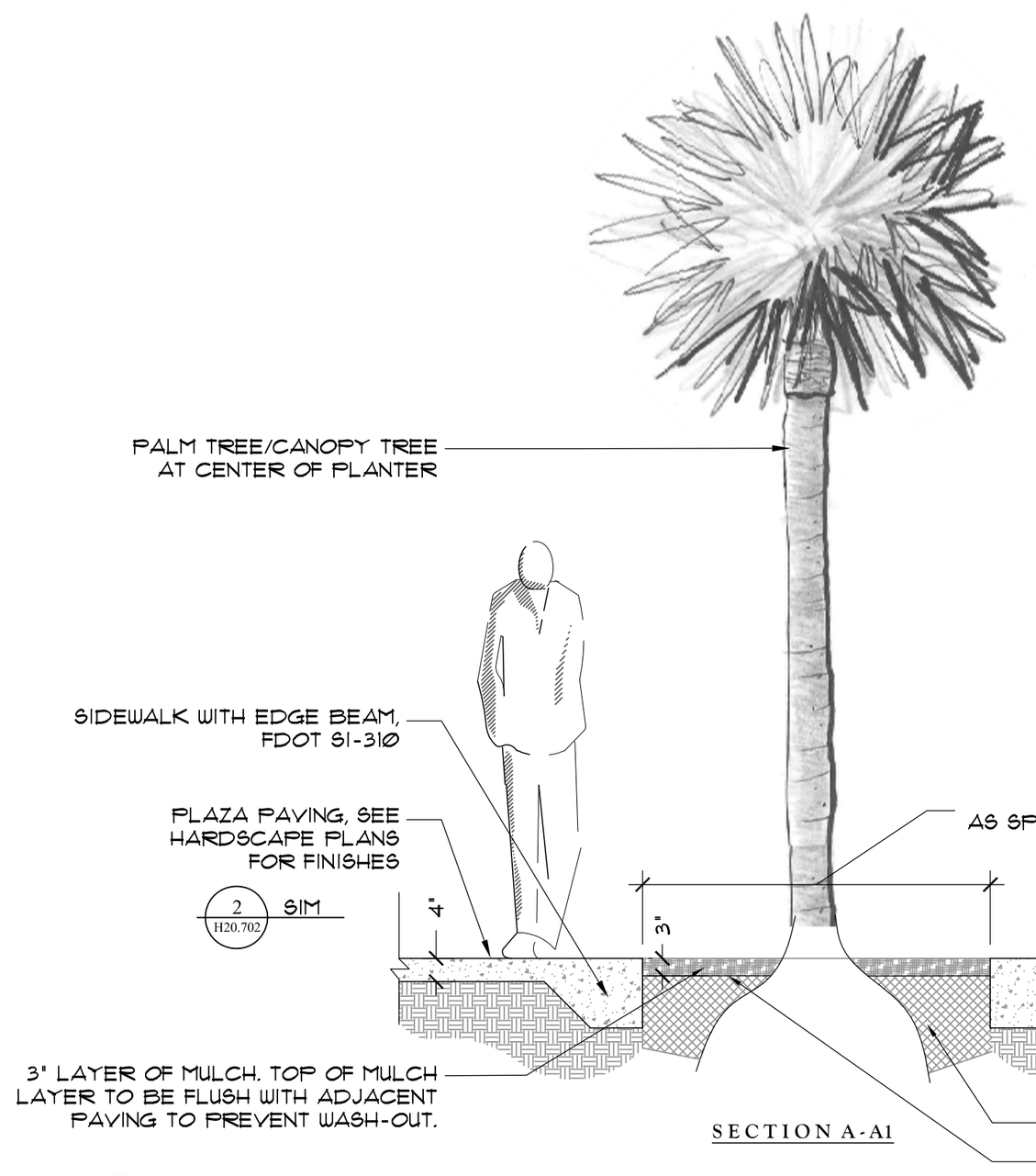

SECTION A-A1

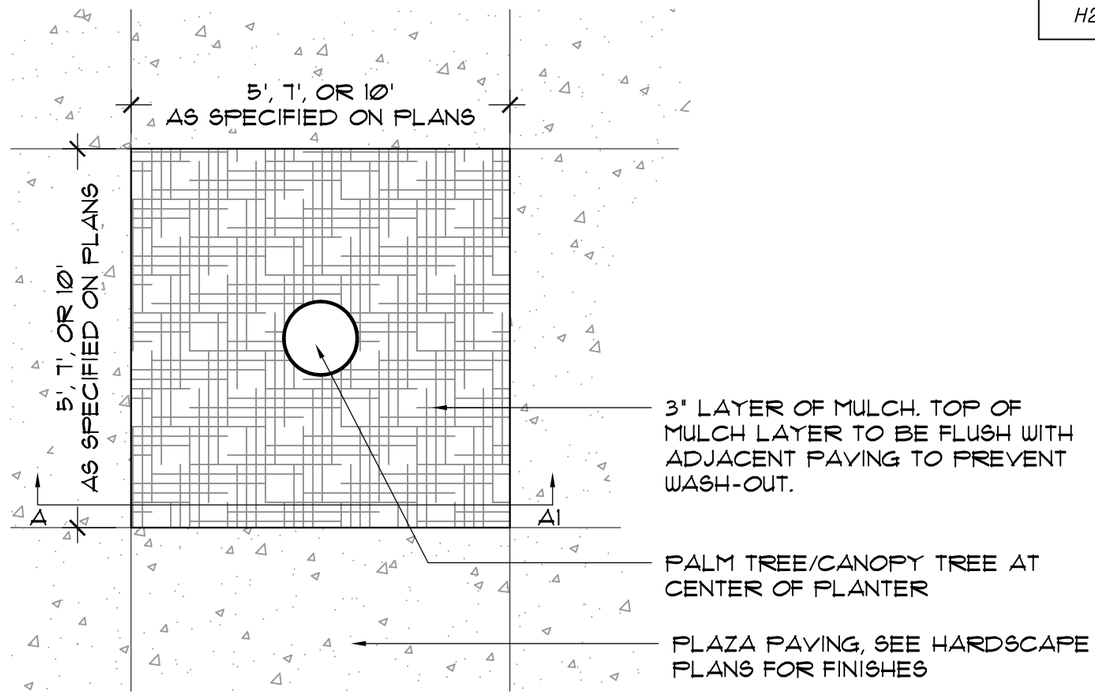

PLAN

NOTES:
+ PALM TREES TO BE PLANTED AT ORIGINAL ROOT BALL DEPTHS. DO NOT BACKFILL ONTO PALM TRUNK.
+ PLANTER DRAINS TO NATURAL SOIL BELOW.

1 H20.707

TREE PLANTER AT PLAZA (MEADOW WOODS, OSCEOLA, KISSIMMEE, POINCIANA)

SCALE: 1/2" = 1'-0"

NOTICE: THE OFFICIAL RECORD OF THIS SHEET IS THE ELECTRONIC FILE SIGNED AND SEALED UNDER RULE 61G10-11.011, F.A.C.

REVISIONS					
DATE	BY	DESCRIPTION	DATE	BY	DESCRIPTION

Christina E. Hite, RLA #1340
DIX.HITE + PARTNERS
150 W. JESSUP AVENUE
LONGWOOD, FLORIDA
TEL 407.667.1777
FAX 407.667.1779
Certificate of Authorization No. LC0000358

STATE OF FLORIDA
DEPARTMENT OF TRANSPORTATION

ROAD NO.	COUNTY	FINANCIAL PROJECT ID
CFRC P2S	VARIOUS	423446-9-52-01

CENTRAL FLORIDA COMMUTER RAIL TRANSIT (CFCRT) PHASE 2 SOUTH

HARDSCAPE DETAILS
PAVING DETAILS

SHEET NO. 86

DRAWING NO.
H20.708

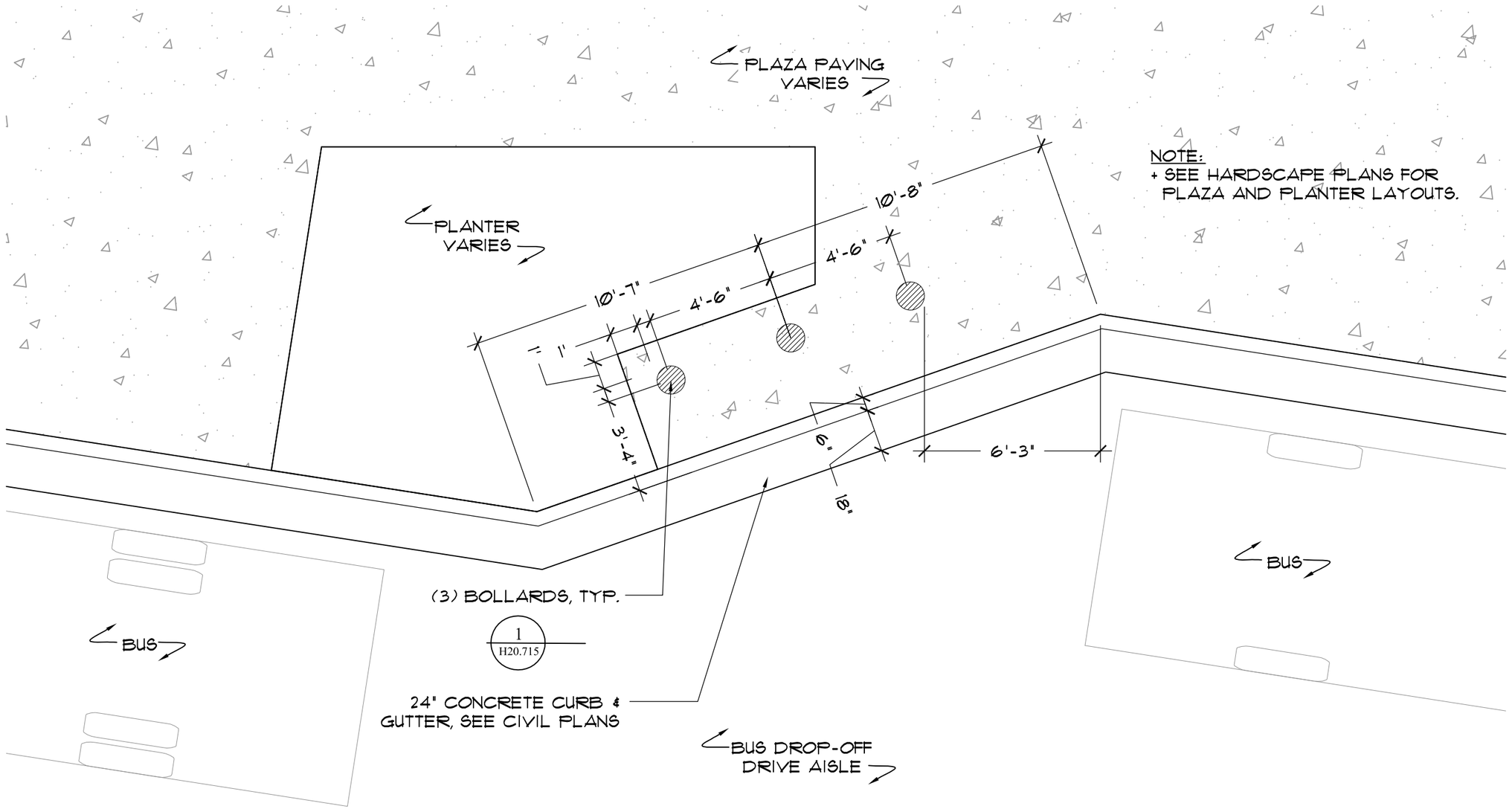

1
H20.708

BOLLARD LAYOUT AT BUS SAWTOOTH (MEADOW WOODS, OSCEOLA, POINCIANA)

SCALE: 3" = 1'-0"

PLAN

NOTICE: THE OFFICIAL RECORD OF THIS SHEET IS THE ELECTRONIC FILE SIGNED AND SEALED UNDER RULE 61G10-11.011, F.A.C.

REVISIONS					
DATE	BY	DESCRIPTION	DATE	BY	DESCRIPTION

Christina E. Hite, RLA #1340
DIX.HITE + PARTNERS
150 W. JESSUP AVENUE
LONGWOOD, FLORIDA
TEL 407.667.1777
FAX 407.667.1779
Certificate of Authorization No. LC0000358

STATE OF FLORIDA
DEPARTMENT OF TRANSPORTATION

ROAD NO.	COUNTY	FINANCIAL PROJECT ID
CFRC P2S	VARIOUS	423446-9-52-01

CENTRAL FLORIDA COMMUTER RAIL TRANSIT (CFCRT) PHASE 2 SOUTH

HARDSCAPE DETAILS
PAVING DETAILS

SHEET NO.
87

DRAWING NO.
H20.709

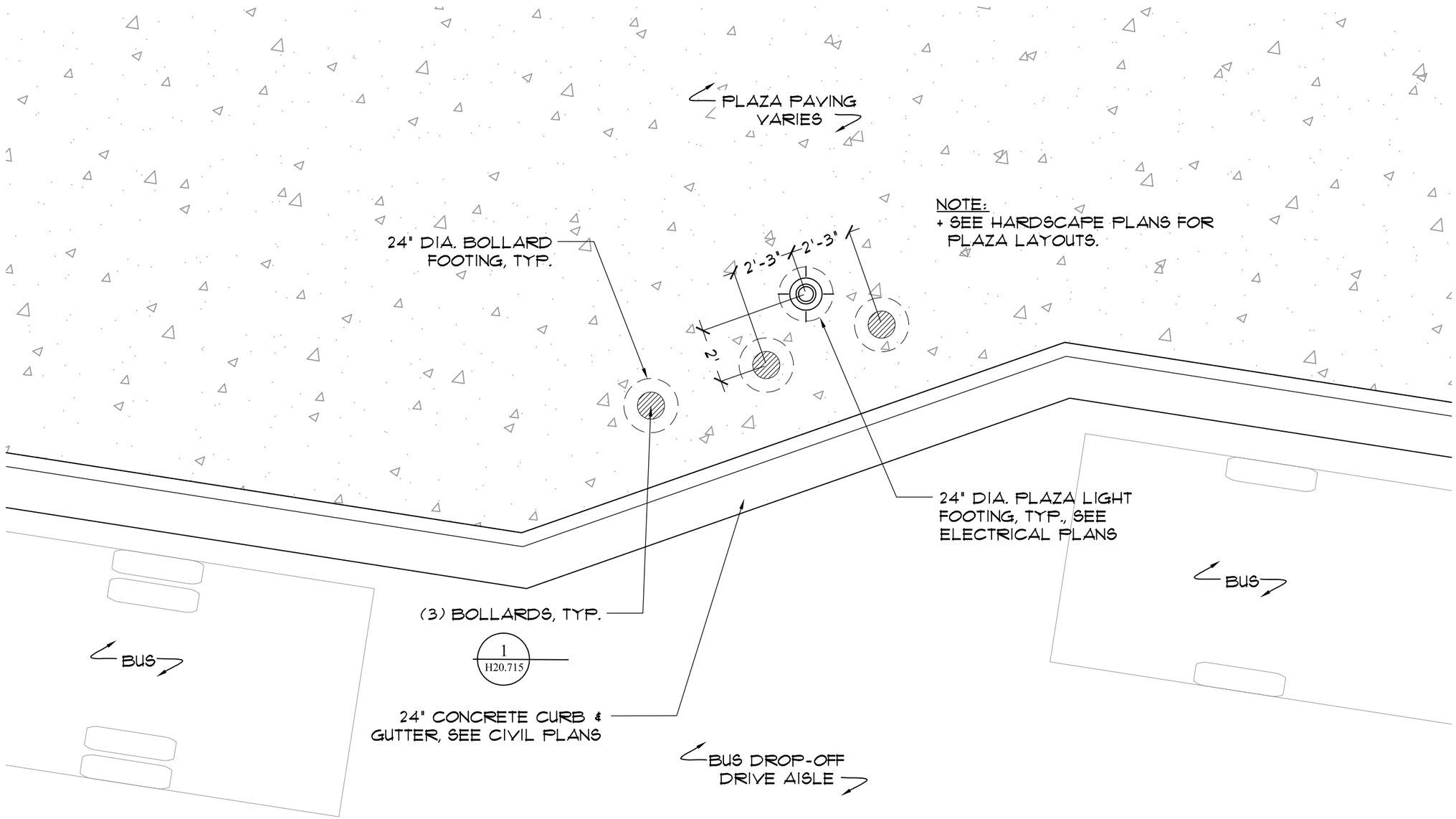

1 / H20.709 **BOLLARD-LIGHT LAYOUT AT BUS SAWTOOTH** (MEADOW WOODS, OSCEOLA, POINCIANA)

SCALE: 3" = 1'-0"

PLAN

NOTICE: THE OFFICIAL RECORD OF THIS SHEET IS THE ELECTRONIC FILE SIGNED AND SEALED UNDER RULE 61G10-11.011, F.A.C.

REVISIONS					
DATE	BY	DESCRIPTION	DATE	BY	DESCRIPTION

Christina E. Hite, RLA #1340
DIX.HITE + PARTNERS
150 W. JESSUP AVENUE
LONGWOOD, FLORIDA
TEL 407.667.1777
FAX 407.667.1779
Certificate of Authorization No. LC0000358

STATE OF FLORIDA
DEPARTMENT OF TRANSPORTATION

ROAD NO.	COUNTY	FINANCIAL PROJECT ID
CFRC P2S	VARIOUS	423446-9-52-01

CENTRAL FLORIDA COMMUTER RAIL TRANSIT (CFCRT) PHASE 2 SOUTH

HARDSCAPE DETAILS
PAVING DETAILS

SHEET NO. 88

DRAWING NO.
H20.710

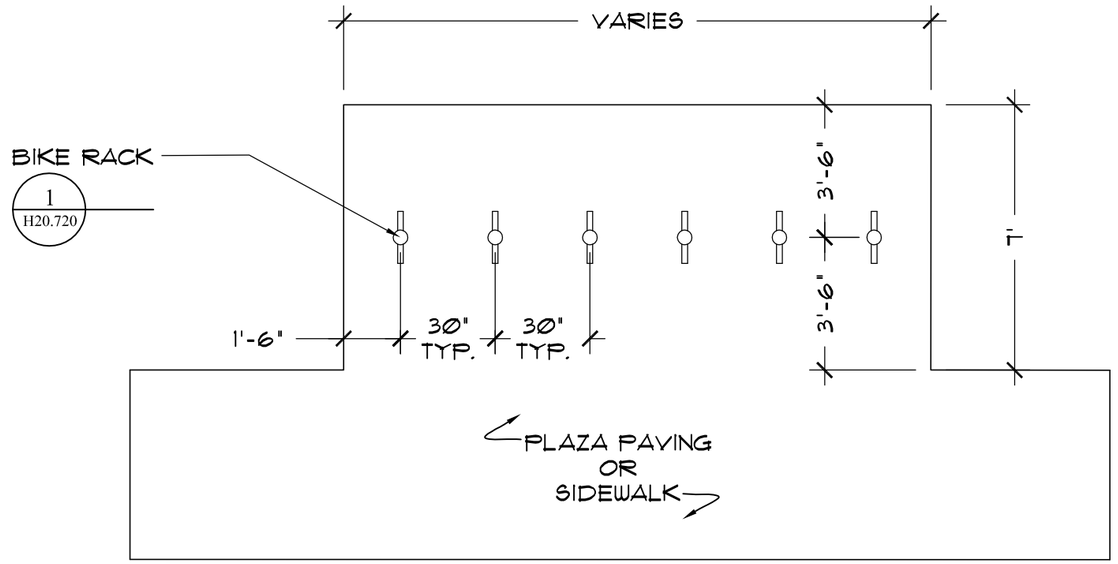

NOTES:
+ SEE HARDSCAPE PLANS FOR BIKE PARKING LAYOUT AND QUANTITIES.
+ SEE HARDSCAPE PLANS FOR PLAZA FINISHES.
+ SEE MATERIALS SCHEDULE FOR EACH LISTED STATION.

1
H20.710

BIKE PARKING LAYOUT (MEADOW WOODS, OSCEOLA, KISSIMMEE, POINCIANA)

SCALE: 1/4" = 1'-0"

PLAN

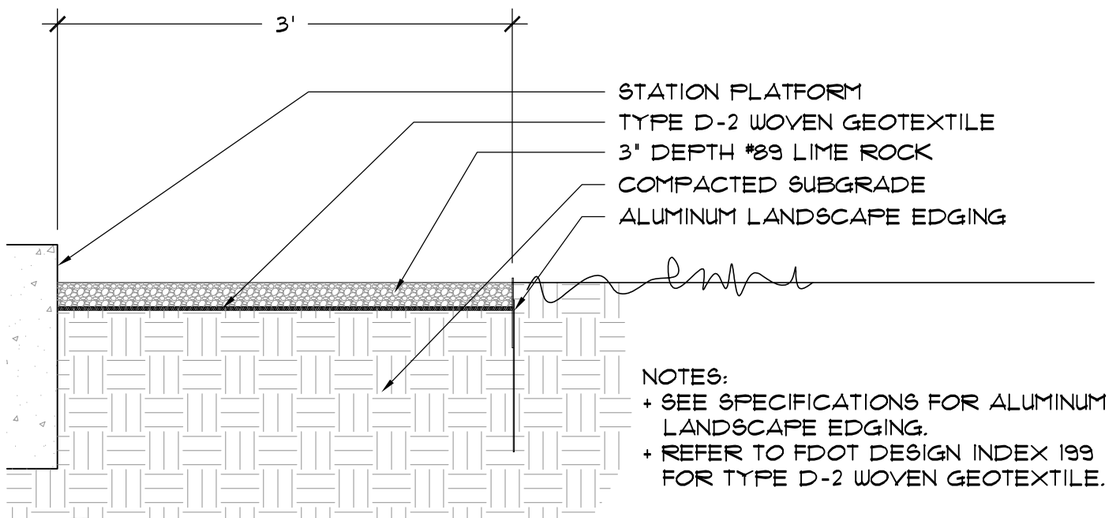

NOTES:
+ SEE SPECIFICATIONS FOR ALUMINUM LANDSCAPE EDGING.
+ REFER TO FDOT DESIGN INDEX 199 FOR TYPE D-2 WOVEN GEOTEXTILE.

2
H20.710

MAINTENANCE PATH (MEADOW WOODS, OSCEOLA, POINCIANA)

SCALE: 1" = 1'-0"

SECTION

NOTES:
+ PAVING TO ILLUSTRATE HEAVY SAND BLASTED TUPPERWARE LOGO. SAND BLASTED LOGOS ARE TO BE APPLIED BY UTILIZING A LASER CUT ALUMINUM SHEETING "STENCIL". TUPPERWARE LOGO AND TEXT SHALL BE NEGATIVE SPACE OF STENCIL.
+ TUPPERWARE TO PROVIDE LOGO AND TEXT FILE TO CONTRACTOR FOR "STENCIL" FABRICATION.
+ ENGINEER TO APPROVE STENCIL AND SAND BLASTED 1'-6"x3' MIN. SAMPLE PRIOR TO APPLICATION.
+ SEE SPECIFICATIONS FOR SAMPLES TO BE PROVIDED FOR ENGINEER APPROVAL.

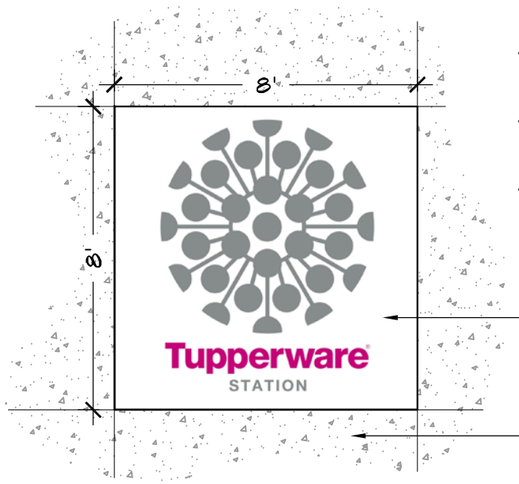

3
H20.710

SANDBLAST LOGO (OSCEOLA)

SCALE: 1/2" = 1'-0"

PLAN

NOTICE: THE OFFICIAL RECORD OF THIS SHEET IS THE ELECTRONIC FILE SIGNED AND SEALED UNDER RULE 61G10-11.011, F.A.C.

REVISIONS					
DATE	BY	DESCRIPTION	DATE	BY	DESCRIPTION

Christina E. Hite, RLA #1340
DIX.HITE + PARTNERS
150 W. JESSUP AVENUE
LONGWOOD, FLORIDA
TEL 407.667.1777
FAX 407.667.1779
Certificate of Authorization No. LC0000358

STATE OF FLORIDA
DEPARTMENT OF TRANSPORTATION

ROAD NO.	COUNTY	FINANCIAL PROJECT ID
CFRC P2S	VARIOUS	423446-9-52-01

CENTRAL FLORIDA COMMUTER RAIL TRANSIT (CFCRT) PHASE 2 SOUTH

HARDSCAPE DETAILS
PAVING DETAILS

SHEET NO.
89

DRAWING NO.
H20.711

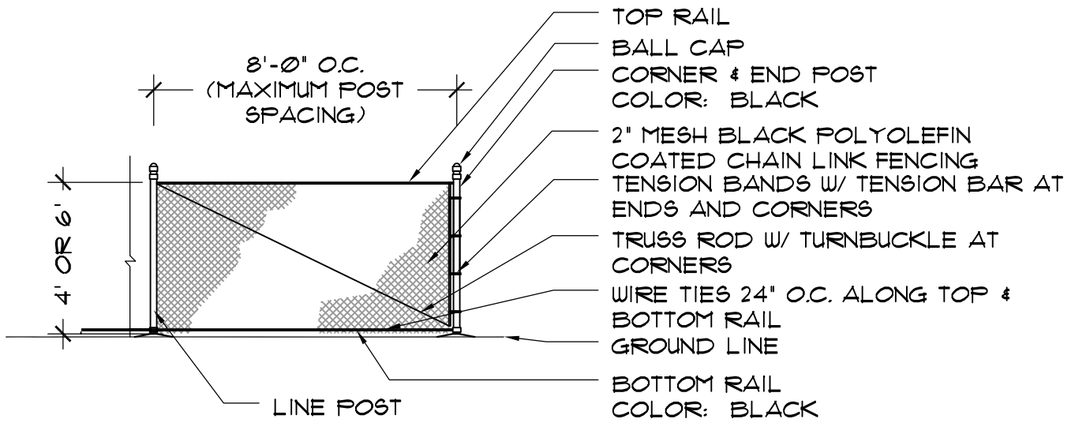

NOTES:
+ SEE SPECIFICATIONS FOR POLYOLEFIN COATED CHAIN LINK FENCING.
+ SEE STRUCTURAL DETAIL 1/H20.763 FOR STRUCTURAL INFORMATION.
+ SEE SPECIFICATIONS FOR SAMPLES TO BE PROVIDED FOR ENGINEER APPROVAL.
+ 6' HT. FENCE TO BE USED AT UTILITY YARDS.

1 / H20.711 **VINYL COATED CHAIN LINK FENCE** (MEADOW WOODS, OSCEOLA, KISSIMMEE, POINCIANA)

SCALE: 1/4" = 1'-0"

ELEVATION

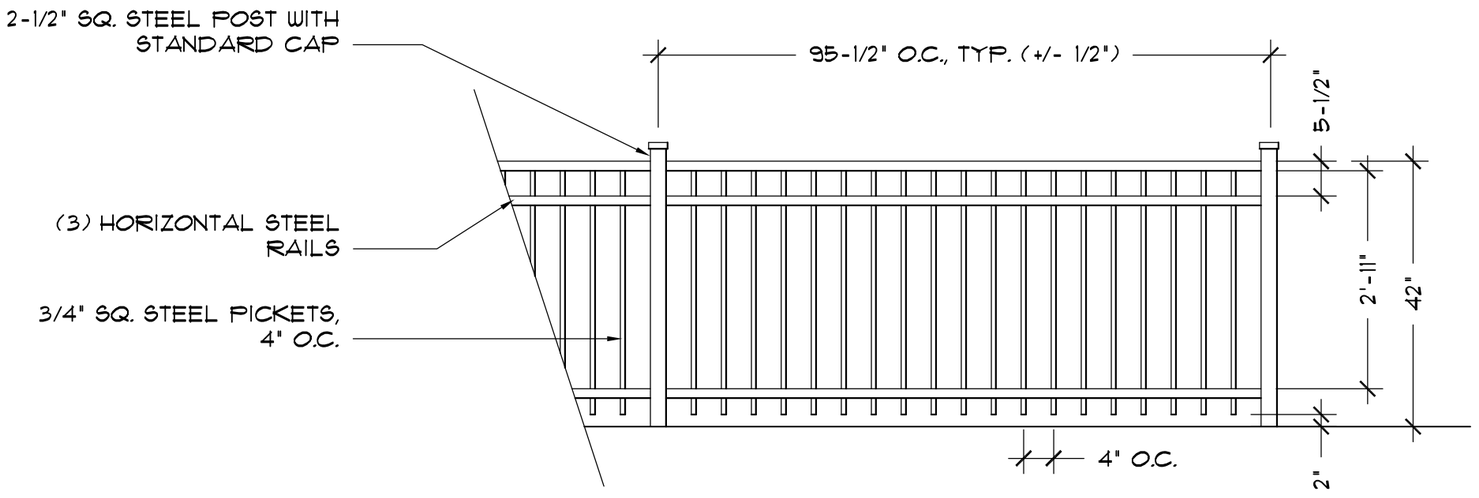

NOTES:
+ CONTRACTOR TO SUBMIT SHOP DRAWINGS TO ENGINEER FOR APPROVAL PRIOR TO FABRICATION.
+ SEE STRUCTURAL DETAIL 1/H20.764 FOR STRUCTURAL INFORMATION.
+ SEE SPECIFICATIONS FOR SAMPLES TO BE PROVIDED FOR ENGINEER'S APPROVAL.
+ FEDERAL STANDARD COLOR 2(SEMI-GLOSS)-7(BLACK).

2 / H20.711 **DECORATIVE PICKET FENCE** (MEADOW WOODS, OSCEOLA, POINCIANA)

N.T.S.

ELEVATION

REVISIONS					
DATE	BY	DESCRIPTION	DATE	BY	DESCRIPTION

Christina E. Hite, RLA #1340
DIX.HITE + PARTNERS
150 W. JESSUP AVENUE
LONGWOOD, FLORIDA
TEL 407.667.1777
FAX 407.667.1779
Certificate of Authorization No. LC0000358

STATE OF FLORIDA
DEPARTMENT OF TRANSPORTATION

ROAD NO.	COUNTY	FINANCIAL PROJECT ID
CFRC P2S	VARIOUS	423446-9-52-01

CENTRAL FLORIDA COMMUTER RAIL TRANSIT (CFCRT) PHASE 2 SOUTH

HARDSCAPE DETAILS
FENCING DETAILS

SHEET NO. 90

NOTICE: THE OFFICIAL RECORD OF THIS SHEET IS THE ELECTRONIC FILE SIGNED AND SEALED UNDER RULE 61G10-11.011, F.A.C.

DRAWING NO.
H20.713

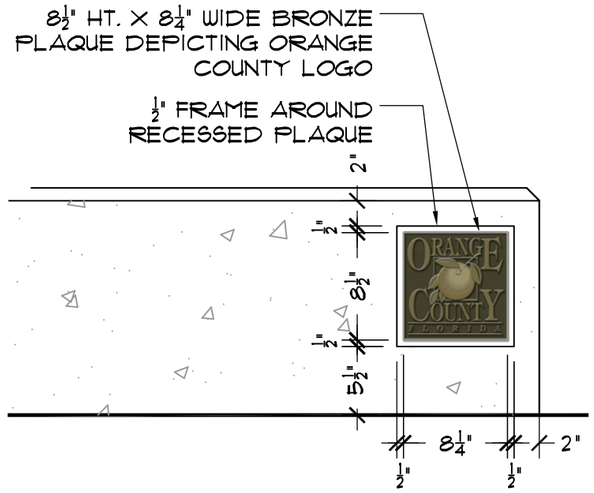

ENLARGEMENT - ELEVATION
SCALE: 1"=1'-0"

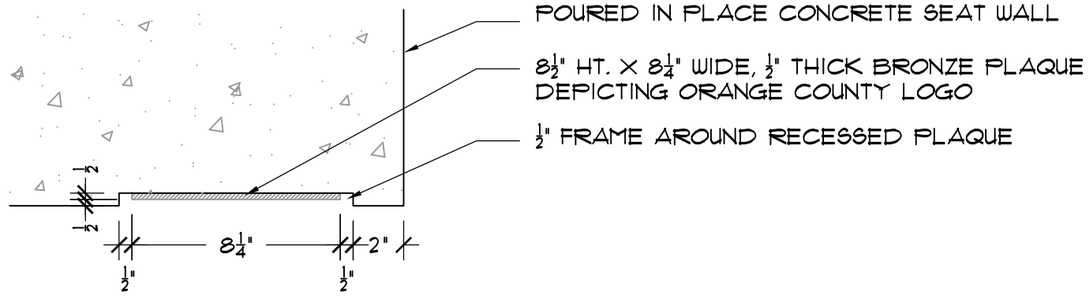

ENLARGEMENT - PLAN
SCALE: 2"=1'-0"

LOGO NOTES
+ PLAQUE TO BE ½" THICK BRONZE.
+ PLAQUE TO BE PIN MOUNTED & ADHERED TO FACE OF WALL. PLAQUE TO BE CENTERED IN RECESSED AREA.
+ ENGINEER TO APPROVE BRONZE PLAQUES PRIOR TO APPLICATION.
+ SEE HARDSCAPE PLANS FOR LOCATIONS.



LOGO

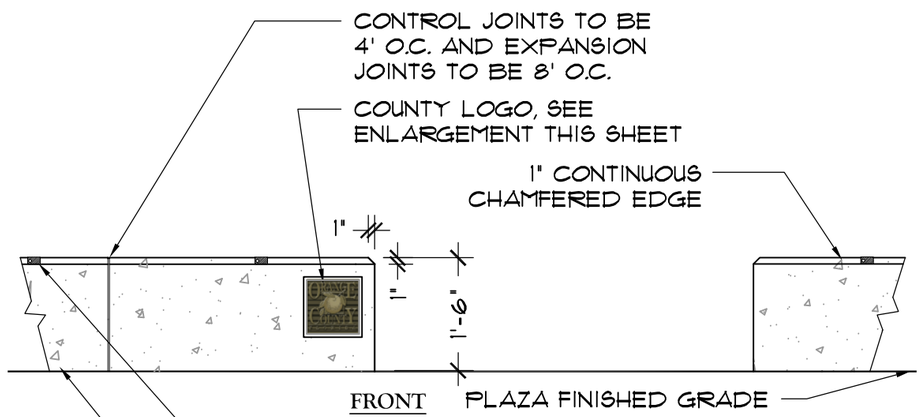

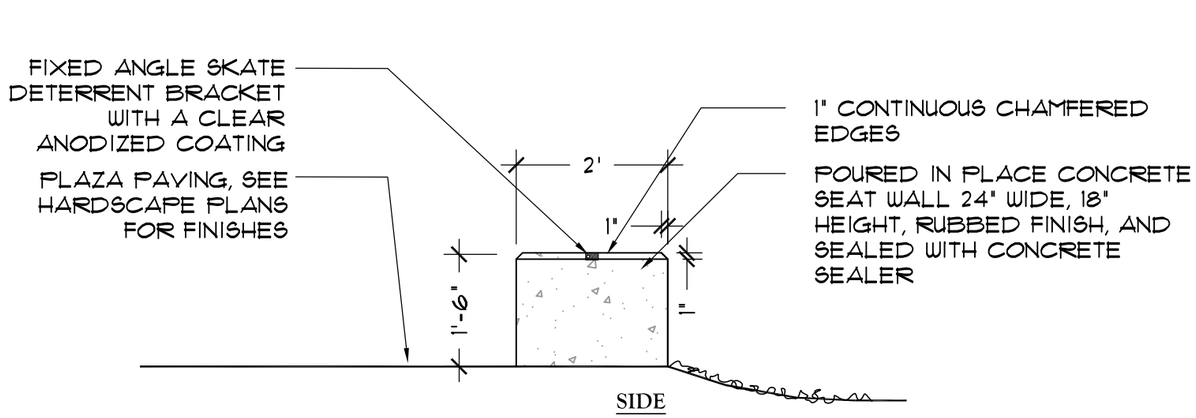

NOTES:
+ FIXED ANGLE SKATE DETERRENT BRACKETS TO BE ATTACHED TO WALL EDGES. SEE SPECIFICATIONS.
+ SEE STRUCTURAL DETAIL 1/H20.766 FOR STRUCTURAL INFORMATION.
+ SEE SPECIFICATIONS FOR SAMPLES TO BE PROVIDED FOR ENGINEER APPROVAL.

1
H20.713

CONCRETE SEAT WALL (MEADOW WOODS)

SCALE: 1/2" = 1'-0"

ELEVATION

REVISIONS					
DATE	BY	DESCRIPTION	DATE	BY	DESCRIPTION

Christina E. Hite, RLA #1340
DIX.HITE + PARTNERS
150 W. JESSUP AVENUE
LONGWOOD, FLORIDA
TEL 407.667.1777
FAX 407.667.1779
Certificate of Authorization No. LC0000358

STATE OF FLORIDA DEPARTMENT OF TRANSPORTATION		
ROAD NO.	COUNTY	FINANCIAL PROJECT ID
CFRC P2S	ORANGE	423446-9-52-01

CENTRAL FLORIDA COMMUTER RAIL TRANSIT (CFCRT) PHASE 2 SOUTH

HARDSCAPE DETAILS
WALL DETAILS

SHEET NO. 92

NOTICE: THE OFFICIAL RECORD OF THIS SHEET IS THE ELECTRONIC FILE SIGNED AND SEALED UNDER RULE 61G10-11.011, F.A.C.

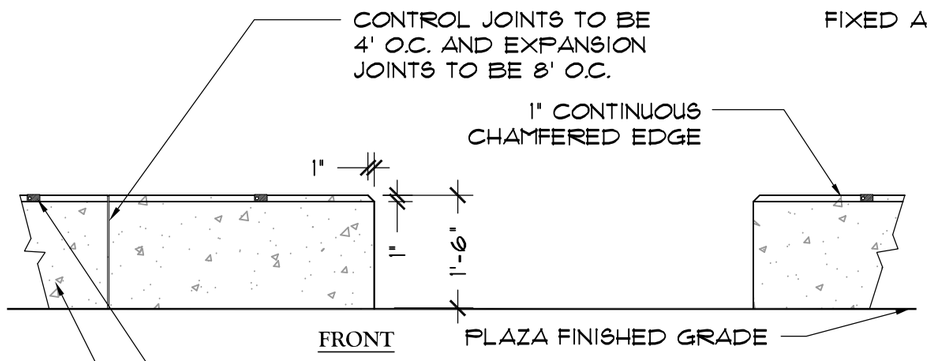

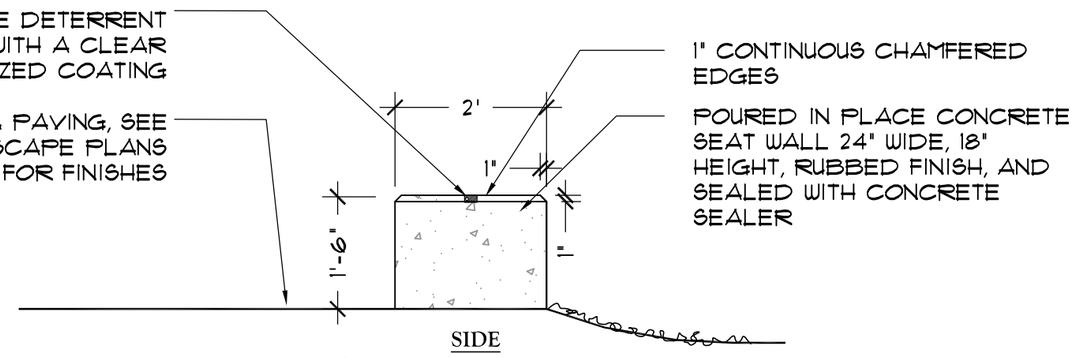

NOTES:
+ FIXED ANGLE SKATE DETERRENT BRACKETS TO BE ATTACHED TO WALL EDGES. SEE SPECIFICATIONS.
+ SEE STRUCTURAL DETAIL 1/H20.766 FOR STRUCTURAL INFORMATION.
+ SEE SPECIFICATIONS FOR SAMPLES TO BE PROVIDED FOR ENGINEER APPROVAL.
+ SEE HARDSCAPE PLANS FOR WALL LENGTH.

1 / H20.714 **CONCRETE SEAT WALL** (MEADOW WOODS, OSCEOLA, POINCIANA)

SCALE: 1/2" = 1'-0" ELEVATION

NOTES:
+ WALLS TO ILLUSTRATE HEAVY SAND BLASTED TUPPERWARE LOGO. SAND BLASTED LOGOS ARE TO BE APPLIED BY UTILIZING A LASER CUT ALUMINUM SHEETING "STENCIL". TUPPERWARE LOGO AND TEXT SHALL BE NEGATIVE SPACE OF STENCIL.
+ TUPPERWARE TO PROVIDE LOGO FILE TO CONTRACTOR FOR "STENCIL" FABRICATION.
+ SEE STRUCTURAL DETAIL 1/H20.766 FOR STRUCTURAL INFORMATION.
+ ENGINEER TO APPROVE STENCIL AND SAND BLASTED 1'-6"x3' MIN. SAMPLE PRIOR TO APPLICATION.
+ SEE SPECIFICATIONS FOR SAMPLES TO BE PROVIDED FOR ENGINEER APPROVAL.

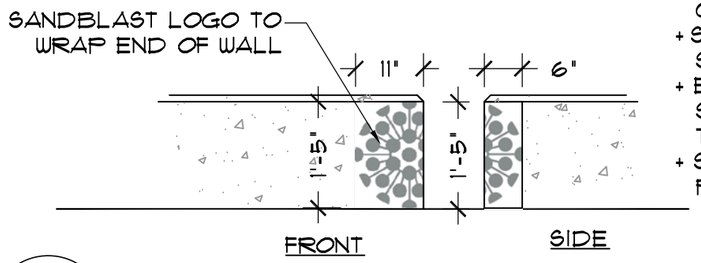

2 / H20.714 **SANDBLAST LOGO SEAT WALL** (OSCEOLA)

SCALE: 1/2" = 1'-0" ELEVATION

REVISIONS					
DATE	BY	DESCRIPTION	DATE	BY	DESCRIPTION

Christina E. Hite, RLA #1340
DIX.HITE + PARTNERS
150 W. JESSUP AVENUE
LONGWOOD, FLORIDA
TEL 407.667.1777
FAX 407.667.1779
Certificate of Authorization No. LC0000358

STATE OF FLORIDA
DEPARTMENT OF TRANSPORTATION

ROAD NO.	COUNTY	FINANCIAL PROJECT ID
CFRC P2S	VARIOUS	423446-9-52-01

CENTRAL FLORIDA COMMUTER RAIL TRANSIT (CFCRT) PHASE 2 SOUTH

HARDSCAPE DETAILS
WALL DETAILS

SHEET NO. 93

NOTICE: THE OFFICIAL RECORD OF THIS SHEET IS THE ELECTRONIC FILE SIGNED AND SEALED UNDER RULE 61G10-11.011, F.A.C.

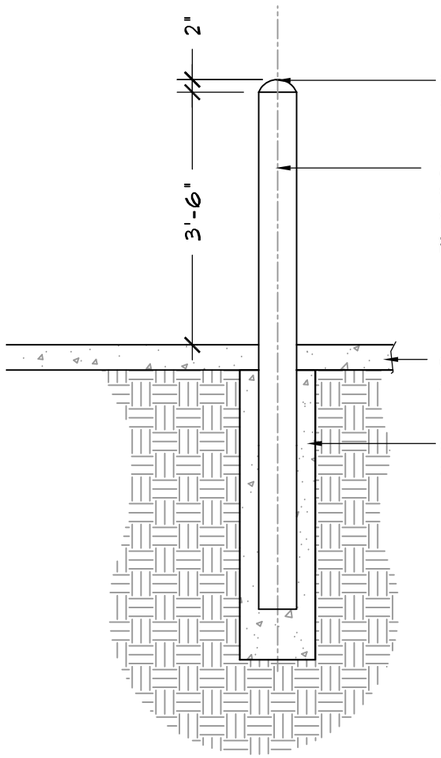

ROUNDED OFF CONCRETE TOP. TOP OF PIPE TO RECEIVE HIGH PERFOMANCE PAINTED FINISH.

8" STANDARD WEIGHT DIAMETER STEEL PIPE, FILLED WITH CONCRETE. PIPE TO RECEIVE HIGH PERFORMANCE PAINTED FINISH.

CONCRETE OR LANDSCAPE AREA, SEE PLANS FOR LOCATIONS

CONCRETE FOOTING, SEE STRUCTURAL INFORMATION

NOTES:
+ SEE SPECIFICATIONS FOR STEEL PIPE BOLLARD.
+ STEEL PIPE AND ROUNDED CONCRETE TOP SHALL RECEIVE HIGH PERFORMANCE, PAINTED FINISH. PROVIDE ONE PRIMER COAT AND TWO FINISH PAINT COATS. FEDERAL STANDARD COLOR SHALL BE 2(SEMI-GLOSS)-7(SILVER) FOR MEADOW WOODS, OSCEOLA PKWY, & POINCIANA. FEDERAL STANDARD COLOR SHALL BE 2(SEMI-GLOSS)-7(BLACK) FOR KISSIMMEE. ENGINEER TO APPROVE COLOR SAMPLE PRIOR TO APPLICATION.
+ SEE STRUCTURAL DETAIL 1/H20.767 FOR STRUCTURAL INFORMATION.

1 / H20.715 **BOLLARD** (MEADOW WOODS, OSCEOLA, KISSIMMEE, POINCIANA)
SCALE: 1/2" = 1'-0" SECTION

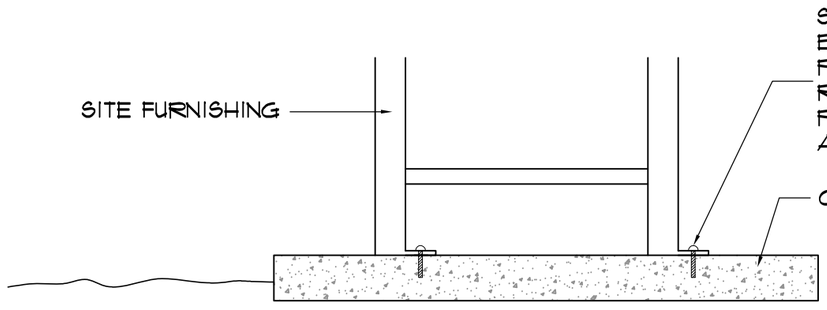

SITE FURNISHING TO BE BOLTED TO CONCRETE PER MANUFACTURER'S RECOMMENDATION. PRE-DRILL PAVEMENT AND BOLT WITH EPOXY.

CONCRETE

NOTES:
+ ACCESSORY MOUNTING APPLIES TO BENCHES & TRASH RECEPTACLES, WHEN APPLICABLE.
+ HARDWARE TO BE GALVANIZED FOR STAINLESS STEEL.

2 / H20.715 **SITE FURNISHINGS ATTACHMENT** (MEADOW WOODS, OSCEOLA, KISSIMMEE, POINCIANA)
N.T.S. SECTION

NOTICE: THE OFFICIAL RECORD OF THIS SHEET IS THE ELECTRONIC FILE SIGNED AND SEALED UNDER RULE 61G10-11.011, F.A.C.

REVISIONS					
DATE	BY	DESCRIPTION	DATE	BY	DESCRIPTION

Christina E. Hite, RLA #1340
DIX.HITE + PARTNERS
150 W. JESSUP AVENUE
LONGWOOD, FLORIDA
TEL 407.667.1777
FAX 407.667.1779
Certificate of Authorization No. LC0000358

STATE OF FLORIDA
DEPARTMENT OF TRANSPORTATION

ROAD NO.	COUNTY	FINANCIAL PROJECT ID
CFRC P2S	VARIOUS	423446-9-52-01

CENTRAL FLORIDA COMMUTER RAIL TRANSIT (CFCRT) PHASE 2 SOUTH

HARDSCAPE DETAILS
SITE FURNISHINGS DETAILS

SHEET NO. 94

DRAWING NO.

H20.716

LYNX 13' ADVERTISING SHELTER AND SHELTER BENCH TO BE FURNISHED AND INSTALLED BY OTHERS/LYNX.

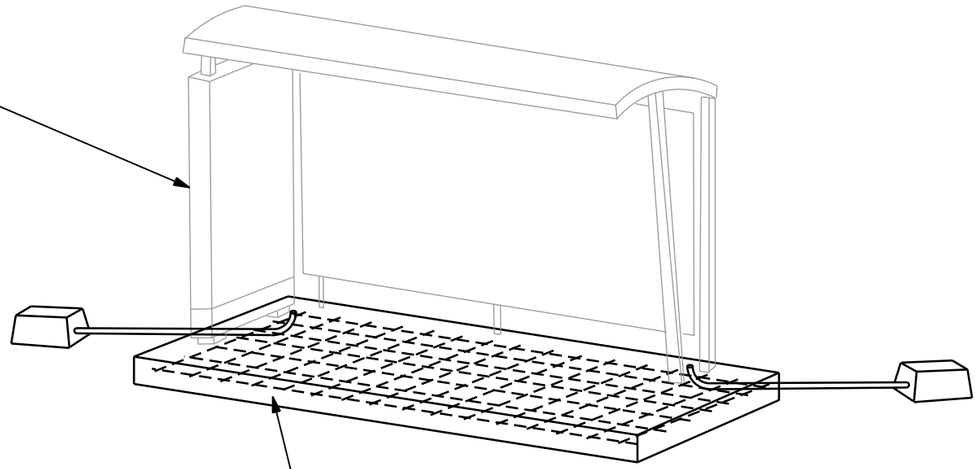

N.T.S.

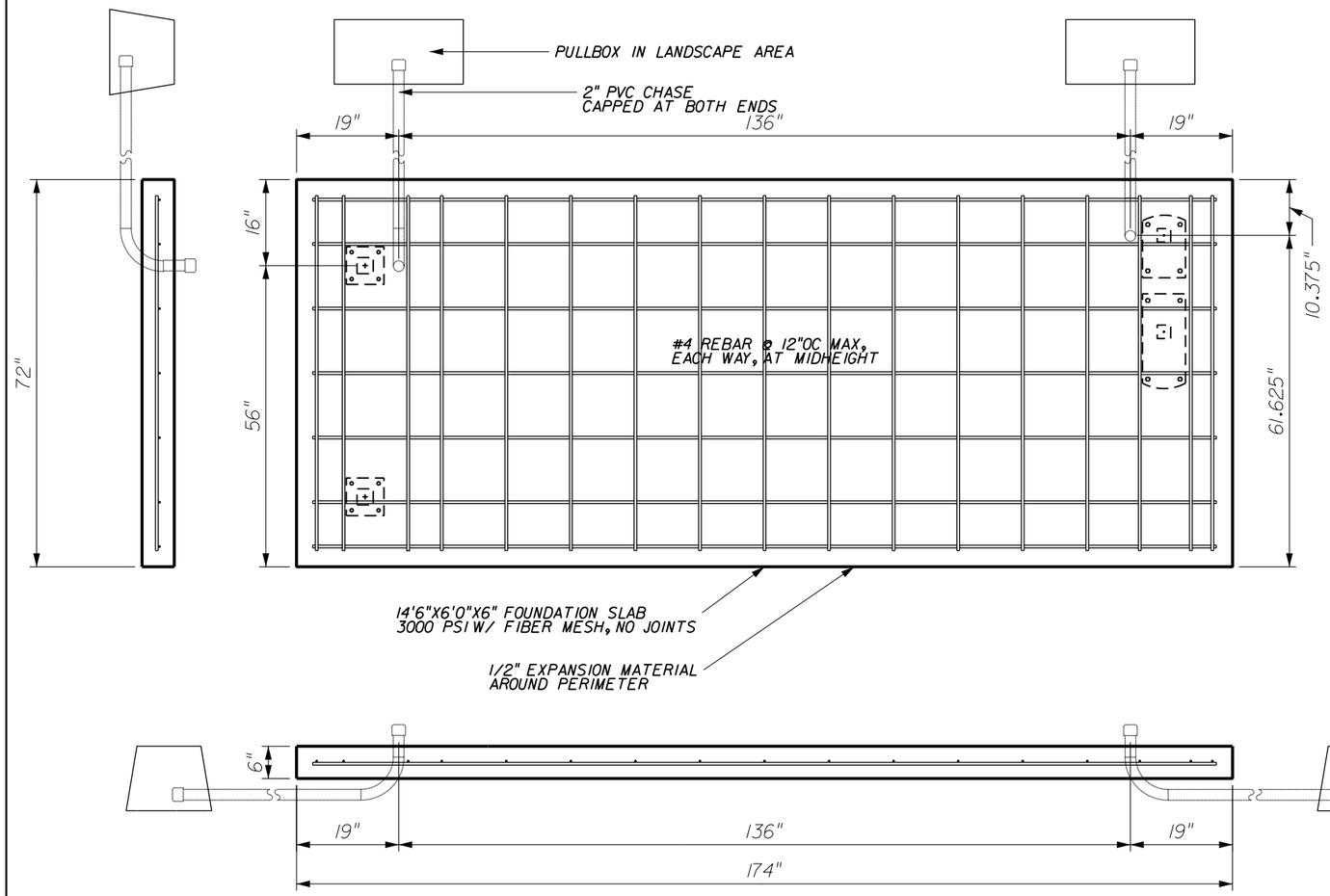

LYNX 5'X13' ADVERTISING BUS SHELTER FOUNDATION
PER LYNX "LYNX SHELTERS 13' WITH AD" DESIGN, 12-10-12 (N.T.S)

1 / H20.716 LYNX 5' X 13' ADVERTISING BUS SHELTER (MEADOW WOODS)
SCALE: NTS

CONTRACTOR TO FURNISH ALL MATERIALS REQUIRED AND CONSTRUCT LYNX 5' X 13' ADVERTISING SHELTER FOUNDATION AS DETAILED IN MOST CURRENT SHELTER FOUNDATION DETAIL PROVIDED BY LYNX, INCLUDING BUT NOT LIMITED TO:

- 14'6" X 6'0" X 6" REINFORCED CONCRETE FOUNDATION
- 1/2" EXPANSION MATERIAL
- 1/2" REBAR SPACED AT MAXIMUM 12" ON CENTER, EACH WAY, AT MID HEIGHT
- TWO 2" PVC CHASES FROM BASEPLATES TO PULL BOX IN ADJACENT LANDSCAPE AREA, WITH PULL STRING, CAPPED AT EACH END

* LYNX SHELTER FOUNDATION INFORMATION *
* PROVIDED TO CLARIFY SCOPE ONLY. *

CONTRACTOR TO OBTAIN MOST CURRENT FOUNDATION STRUCTURAL DESIGN AND ACCEPTANCE REQUIREMENTS FROM LYNX PRIOR TO BEGINNING WORK.

NOTICE: THE OFFICIAL RECORD OF THIS SHEET IS THE ELECTRONIC FILE SIGNED AND SEALED UNDER RULE 61G15-23.003, F.A.C.

REVISIONS					
DATE	BY	DESCRIPTION	DATE	BY	DESCRIPTION

TRANSPORTATION
AECOM TECHNICAL SERVICES, Inc.
300 Colonial Center Pkwy, Suite 130
Lake Mary, FL. 32746
T 407.549.4200 F 407.549.4201
Certificate of Authorization No. 8115
DAVID S. BURWELL PE NO. 55853 www.aecom.com

STATE OF FLORIDA
DEPARTMENT OF TRANSPORTATION

ROAD NO.	COUNTY	FINANCIAL PROJECT ID
CFRC P2S	ORANGE	423446-9-52-01

CENTRAL FLORIDA COMMUTER RAIL TRANSIT (CFCRT) PHASE 2 SOUTH

HARDSCAPE DETAILS
SITE AMENITIES DETAILS

SHEET NO. 95

PrinceK 5/25/2015 6:13:01 PM Q:\423446952015\roadway\H20-716 LYNX ADVERT FNDTN.dgn

DRAWING NO.

H20.717

LYNX 6' X 13' CANTILEVERED BUS SHELTER AND SHELTER BENCH TO BE FURNISHED AND INSTALLED BY OTHERS/LYNX.

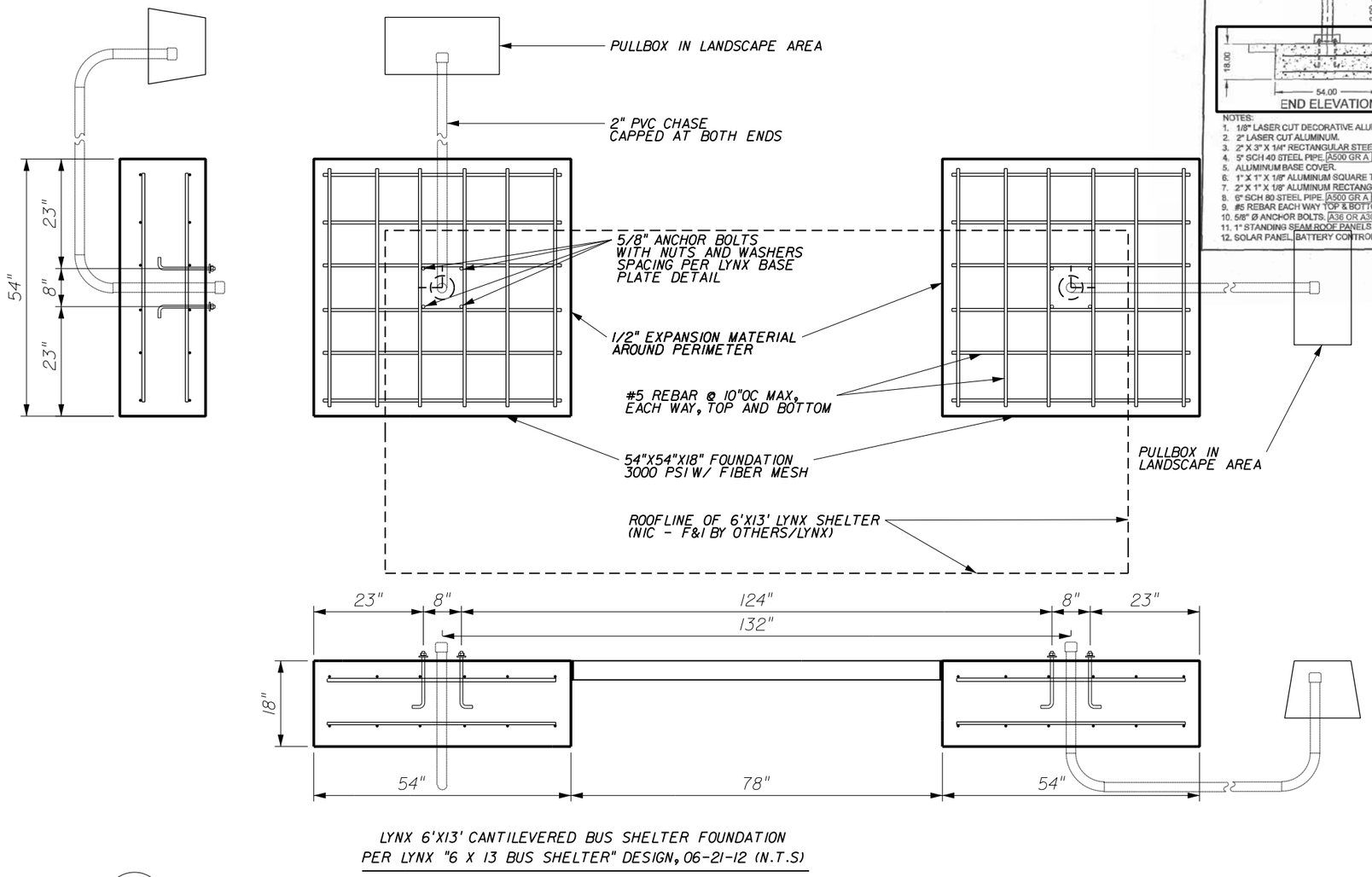

LYNX 6'X13' CANTILEVERED BUS SHELTER FOUNDATION PER LYNX "6 X 13 BUS SHELTER" DESIGN, 06-21-12 (N.T.S)

1 / H20.717 LYNX 6' X 13' CANTILEVERED BUS SHELTER (OCEOLA PARKWAY, POINCIANA)
SCALE: NTS

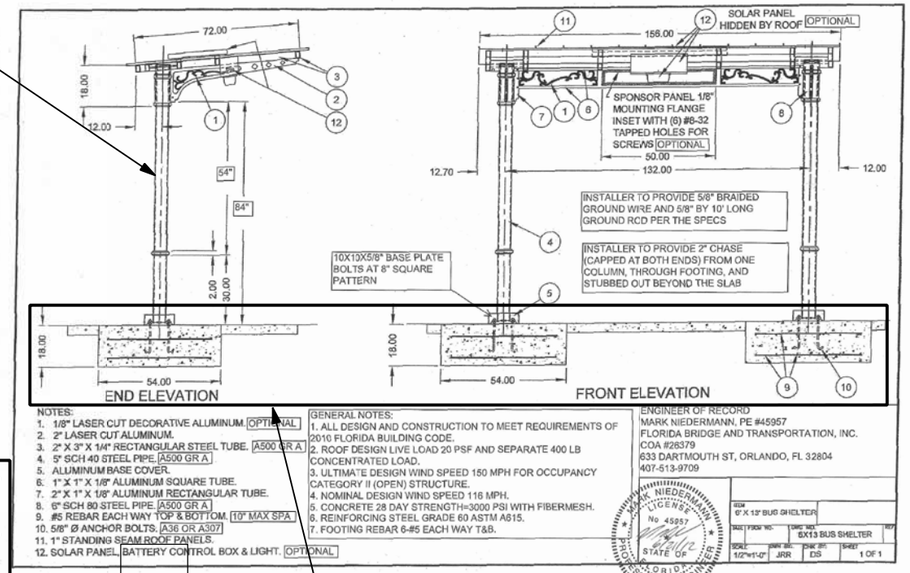

NOTES:
1. 1/8" LASER CUT DECORATIVE ALUMINUM. OPTIONAL
2. 2" LASER CUT ALUMINUM.
3. 2" X 3" X 1/4" RECTANGULAR STEEL TUBE. A500 GR A.
4. 5" SCH 40 STEEL PIPE. A500 GR A.
5. ALUMINUM BASE COVER.
6. 1" X 1" X 1/8" ALUMINUM SQUARE TUBE.
7. 2" X 1" X 1/8" ALUMINUM RECTANGULAR TUBE.
8. 6" SCH 80 STEEL PIPE. A500 GR A.
9. #5 REBAR EACH WAY TOP & BOTTOM. 10" MAX SPA.
10. 5/8" Ø ANCHOR BOLTS. A36 OR A307
11. 1" STANDING SEAM ROOF PANELS.
12. SOLAR PANEL, BATTERY CONTROL BOX & LIGHT. OPTIONAL

GENERAL NOTES:
1. ALL DESIGN AND CONSTRUCTION TO MEET REQUIREMENTS OF 2010 FLORIDA BUILDING CODE.
2. ROOF DESIGN LIVE LOAD 20 PSF AND SEPARATE 400 LB CONCENTRATED LOAD.
3. ULTIMATE DESIGN WIND SPEED 150 MPH FOR OCCUPANCY CATEGORY II (OPEN) STRUCTURE.
4. NOMINAL DESIGN WIND SPEED 116 MPH.
5. CONCRETE 28 DAY STRENGTH=3000 PSI WITH FIBERMESH.
6. REINFORCING STEEL GRADE 60 ASTM A615.
7. FOOTING REBAR 6-#5 EACH WAY T&B.

ENGINEER OF RECORD
MARK NIEDERMANN, PE #45957
FLORIDA BRIDGE AND TRANSPORTATION, INC.
COA #26379
633 DARTMOUTH ST, ORLANDO, FL 32804
407-513-9709

MARK NIEDERMANN LICENSE No. 45957 STATE OF FLORIDA PROFESSIONAL ENGINEER

SIZE	FPID#		
6'X 13' BUS SHELTER			
SCALE: 1/2"=1'-0"	DRWN BY: JRR	CHK BY: DS	SHEET: 1 OF 1
DWG NO: 6X13 BUS SHELTER			REV

CONTRACTOR TO FURNISH ALL MATERIALS REQUIRED AND CONSTRUCT LYNX 6'X13' CANTILEVERED SHELTER FOUNDATION AS DETAILED IN MOST CURRENT SHELTER FOUNDATION DETAIL PROVIDED BY LYNX, INCLUDING BUT NOT LIMITED TO:

- 54"X54"X18" REINFORCED CONCRETE FOUNDATION
- 1/2" EXPANSION MATERIAL
- #5 REBAR AT 10" ON CENTER, EACH WAY, TOP AND BOTTOM
- 5/8" DIAMETER ANCHOR BOLTS
- 2" PVC CHASE FROM EACH FOUNDATION/POLE CENTERLINE TO PULL BOX IN ADJACENT LANDSCAPE AREA, WITH PULL STRING, CAPPED AT EACH END

* LYNX SHELTER FOUNDATION INFORMATION *
* PROVIDED TO CLARIFY SCOPE ONLY. *

CONTRACTOR TO OBTAIN MOST CURRENT FOUNDATION STRUCTURAL DESIGN AND ACCEPTANCE REQUIREMENTS FROM LYNX PRIOR TO BEGINNING WORK.

NOTICE: THE OFFICIAL RECORD OF THIS SHEET IS THE ELECTRONIC FILE SIGNED AND SEALED UNDER RULE 61G15-23.003, F.A.C.

REVISIONS					
DATE	BY	DESCRIPTION	DATE	BY	DESCRIPTION

TRANSPORTATION
AECOM TECHNICAL SERVICES, Inc.
300 Colonial Center Pkwy, Suite 130
Lake Mary, FL. 32746
T 407.549.4200 F 407.549.4201
Certificate of Authorization No. 8115
DAVID S. BURWELL PE NO. 55853 www.aecom.com

STATE OF FLORIDA
DEPARTMENT OF TRANSPORTATION

ROAD NO.	COUNTY	FINANCIAL PROJECT ID
CFRC P2S	VARIOUS	423446-9-52-01

CENTRAL FLORIDA COMMUTER RAIL TRANSIT (CFCRT) PHASE 2 SOUTH

HARDSCAPE DETAILS
SITE AMENITIES DETAILS

SHEET NO. 96

DRAWING NO.
H20.718



BENCH (B-1)

6'L, BACKED
STEEL W/ OPTIONAL CENTER ARMREST
SURFACE MOUNT
POWDERCOATED
FEDERAL STANDARD COLOR - 1(GLOSS)-7(SILVER)

REFER TO DETAIL 2/H20.715 FOR
INSTALLATION ATTACHMENT.

1 / H20.718 **BENCH** (MEADOW WOODS, POINCIANA)
N.T.S.



BENCH (B-2)

67" L, BACKED
STEEL
PLASMA CUT 'GRASS' DESIGN
SURFACE MOUNT
POWDERCOATED
FEDERAL STANDARD COLOR - 1(GLOSS)-7(SILVER)

REFER TO DETAIL 2/H20.715 FOR
INSTALLATION ATTACHMENT.

2 / H20.718 **BENCH** (MEADOW WOODS)
N.T.S.



BENCH (B-3)

6'L, BACKED
STEEL W/ OPTIONAL CENTER ARMREST
SURFACE MOUNT
POWDERCOATED
FEDERAL STANDARD COLOR - 1(GLOSS)-7(BLACK)

REFER TO DETAIL 2/H20.715 FOR
INSTALLATION ATTACHMENT.

3 / H20.718 **BENCH** (KISSIMMEE)
N.T.S.



BENCH (B-4)

77 1/2" L, BACKED
STEEL W/ OPTIONAL CENTER ARMREST
PERFORATED PATTERN IN SEAT PANEL
SURFACE MOUNT
POWDERCOATED
FEDERAL STANDARD COLOR - 1(GLOSS)-7(SILVER)

REFER TO DETAIL 2/H20.715 FOR
INSTALLATION ATTACHMENT.

4 / H20.718 **BENCH** (OSCEOLA)
N.T.S.

NOTICE: THE OFFICIAL RECORD OF THIS SHEET IS THE ELECTRONIC FILE SIGNED AND SEALED UNDER RULE 61G10-11.011, F.A.C.

REVISIONS					
DATE	BY	DESCRIPTION	DATE	BY	DESCRIPTION

Christina E. Hite, RLA #1340
DIX.HITE + PARTNERS
150 W. JESSUP AVENUE
LONGWOOD, FLORIDA
TEL 407.667.1777
FAX 407.667.1779
Certificate of Authorization No. LC0000358

STATE OF FLORIDA
DEPARTMENT OF TRANSPORTATION

ROAD NO.	COUNTY	FINANCIAL PROJECT ID
CFRC P2S	VARIOUS	423446-9-52-01

CENTRAL FLORIDA COMMUTER RAIL TRANSIT (CFCRT) PHASE 2 SOUTH

HARDSCAPE DETAILS
SITE FURNISHINGS DETAILS

SHEET NO. 97

DRAWING NO.
H20.719

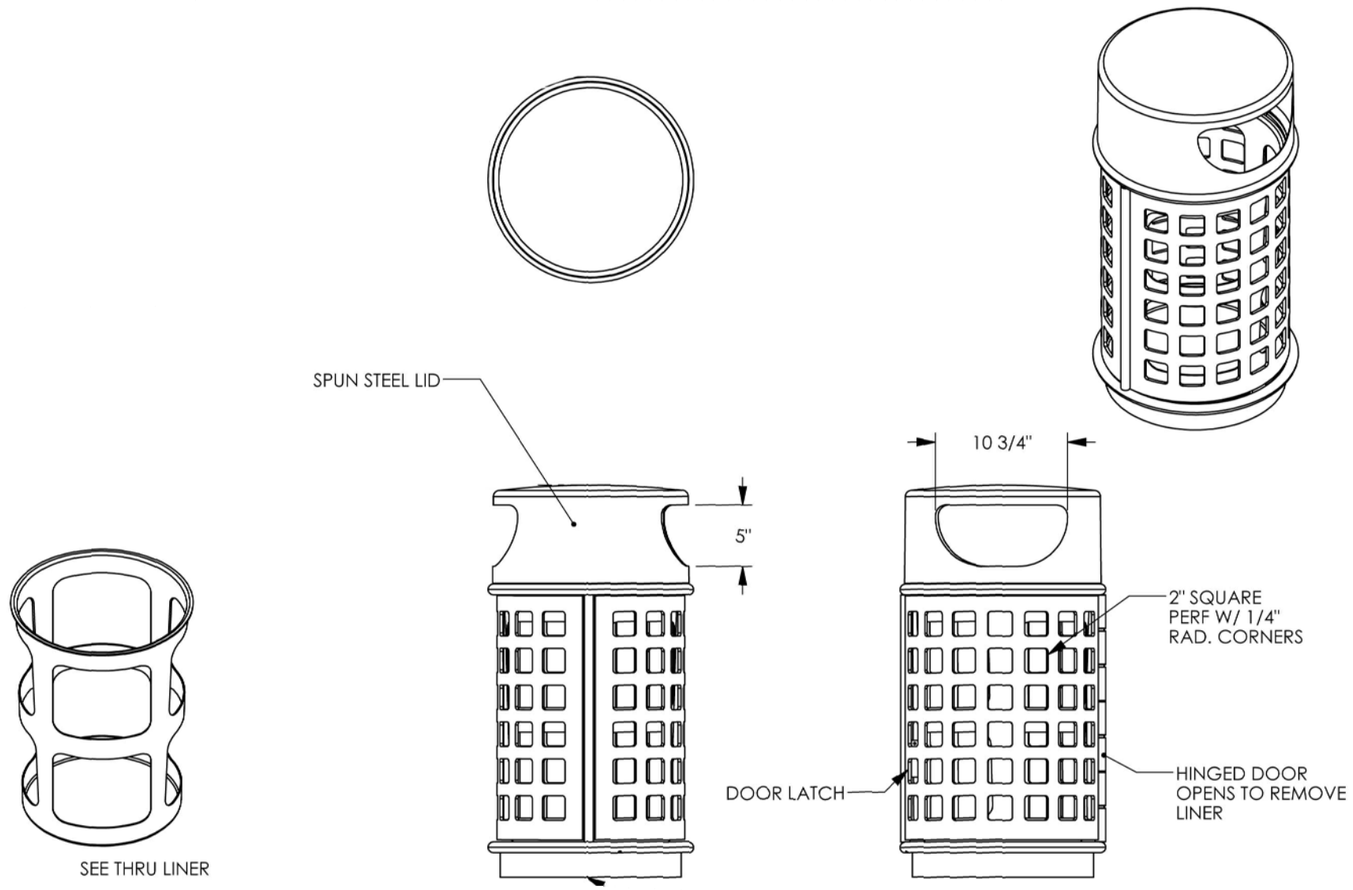

TRASH RECEPTACLE (TR-1)
CUSTOM RECEPTACLE

SIDE UNLOADING W/ FIXED TOP
30 GALLON
SURFACE MOUNT
POWDERCOATED
FEDERAL STANDARD COLOR -
2(SEMI-GLOSS)-7(SILVER)

REFER TO DETAIL 2/H20.715 FOR
INSTALLATION ATTACHMENT.

1
H20.719

"TR-1" TRASH RECEPTACLE (OSCEOLA, POINCIANA)

SCALE: 1" = 1'-0"

NOTICE: THE OFFICIAL RECORD OF THIS SHEET IS THE ELECTRONIC FILE SIGNED AND SEALED UNDER RULE 61G10-11.011, F.A.C.

REVISIONS					
DATE	BY	DESCRIPTION	DATE	BY	DESCRIPTION

Christina E. Hite, RLA #1340
DIX.HITE + PARTNERS
150 W. JESSUP AVENUE
LONGWOOD, FLORIDA
TEL 407.667.1777
FAX 407.667.1779
Certificate of Authorization No. LC0000358

STATE OF FLORIDA
DEPARTMENT OF TRANSPORTATION

ROAD NO.	COUNTY	FINANCIAL PROJECT ID
CFRC P2S	OSCEOLA	423446-9-52-01

CENTRAL FLORIDA COMMUTER RAIL TRANSIT (CFCRT) PHASE 2 SOUTH

HARDSCAPE DETAILS
SITE FURNISHINGS DETAILS

SHEET NO. 98

DRAWING NO.
H20.720

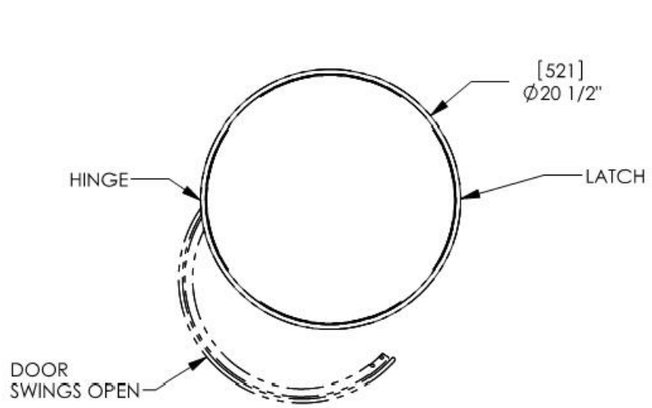

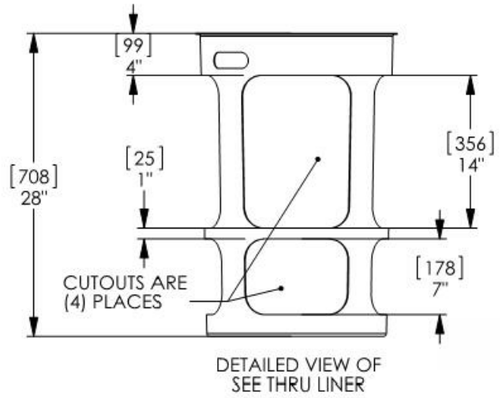

DETAILED VIEW OF
SEE THRU LINER

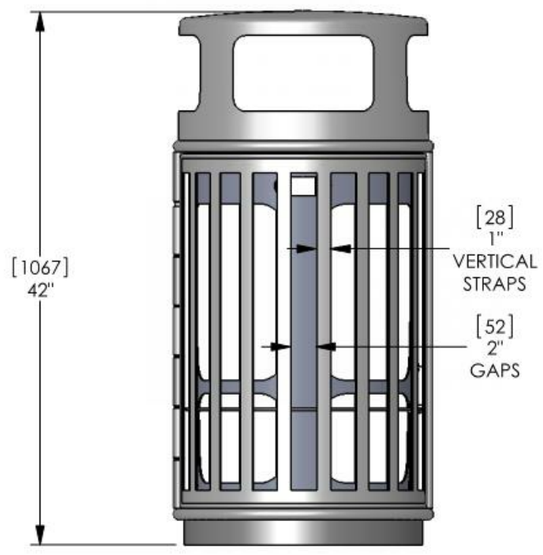

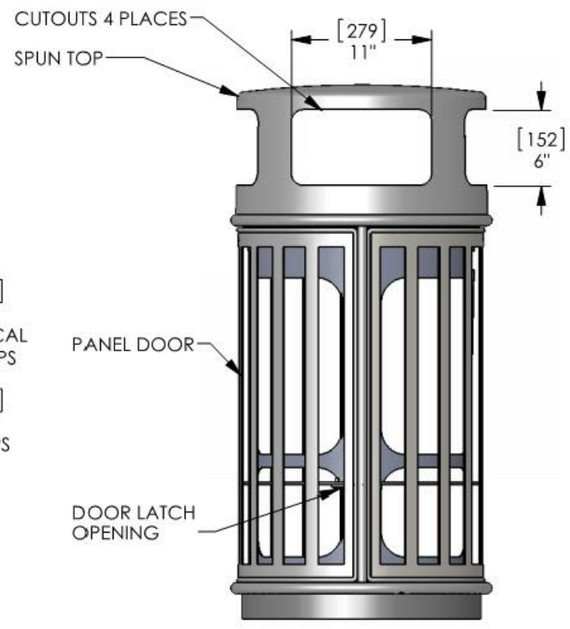

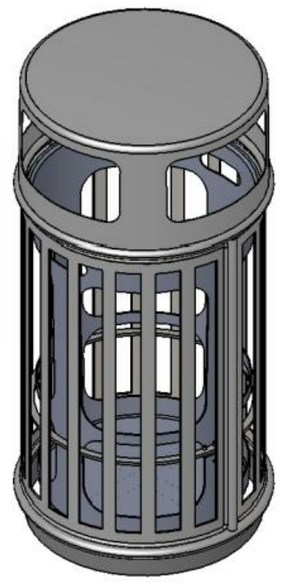

TRASH RECEPTACLE (TR-2)
CUSTOM RECEPTACLE

SIDE UNLOADING W/ FIXED TOP
30 GALLON
SURFACE MOUNT
POWDERCOATED
FEDERAL STANDARD COLORS -
2(SEMI-GLOSS)-7(SILVER): MEADOW WOODS
2(SEMI-GLOSS)-7(BLACK): KISSIMMEE

REFER TO DETAIL 2/H20.715 FOR
INSTALLATION ATTACHMENT.

1
H20.720

"TR-2" TRASH RECEPTACLE (MEADOW WOODS, KISSIMMEE)

SCALE: 1" = 1'-0"

NOTICE: THE OFFICIAL RECORD OF THIS SHEET IS THE ELECTRONIC FILE SIGNED AND SEALED UNDER RULE 61G10-11.011, F.A.C.

REVISIONS					
DATE	BY	DESCRIPTION	DATE	BY	DESCRIPTION

Christina E. Hite, RLA #1340
DIX.HITE + PARTNERS
150 W. JESSUP AVENUE
LONGWOOD, FLORIDA
TEL 407.667.1777
FAX 407.667.1779
Certificate of Authorization No. LC0000358

STATE OF FLORIDA
DEPARTMENT OF TRANSPORTATION

ROAD NO.	COUNTY	FINANCIAL PROJECT ID
CFRC P2S	VARIOUS	423446-9-52-01

CENTRAL FLORIDA COMMUTER RAIL TRANSIT (CFCRT) PHASE 2 SOUTH

HARDSCAPE DETAILS
SITE FURNISHINGS DETAILS

SHEET NO.
99

DRAWING NO.
H20.721



BIKE RACK (BR-1)

DOUBLE BIKE HITCH
IN-GROUND MOUNT
POWDERCOATED
FEDERAL STANDARD COLORS -
2(SEMI-GLOSS)-7(SILVER): MEADOW WOODS, OSCEOLA PKWY, POINCIANA
2(SEMI-GLOSS)-7(BLACK): KISSIMMEE

1 / H20.721 **BIKE RACK** (MEADOW WOODS, OSCEOLA, KISSIMMEE, POINCIANA)
N.T.S.



FLAG POLE

25' INTERNAL HALYARD
SHOE BASE MOUNT
NATURAL SATIN FINISH

2 / H20.721 **25' FLAG POLE** (OSCEOLA)
N.T.S.

NOTICE: THE OFFICIAL RECORD OF THIS SHEET IS THE ELECTRONIC FILE SIGNED AND SEALED UNDER RULE 61G10-11.011, F.A.C.

REVISIONS					
DATE	BY	DESCRIPTION	DATE	BY	DESCRIPTION

Christina E. Hite, RLA #1340
DIX.HITE + PARTNERS
150 W. JESSUP AVENUE
LONGWOOD, FLORIDA
TEL 407.667.1777
FAX 407.667.1779
Certificate of Authorization No. LC0000358

STATE OF FLORIDA
DEPARTMENT OF TRANSPORTATION

ROAD NO.	COUNTY	FINANCIAL PROJECT ID
CFRC P2S	VARIOUS	423446-9-52-01

CENTRAL FLORIDA COMMUTER RAIL TRANSIT (CFCRT) PHASE 2 SOUTH

HARDSCAPE DETAILS
SITE FURNISHINGS DETAILS

SHEET NO.
100

DRAWING NO.
H20.726

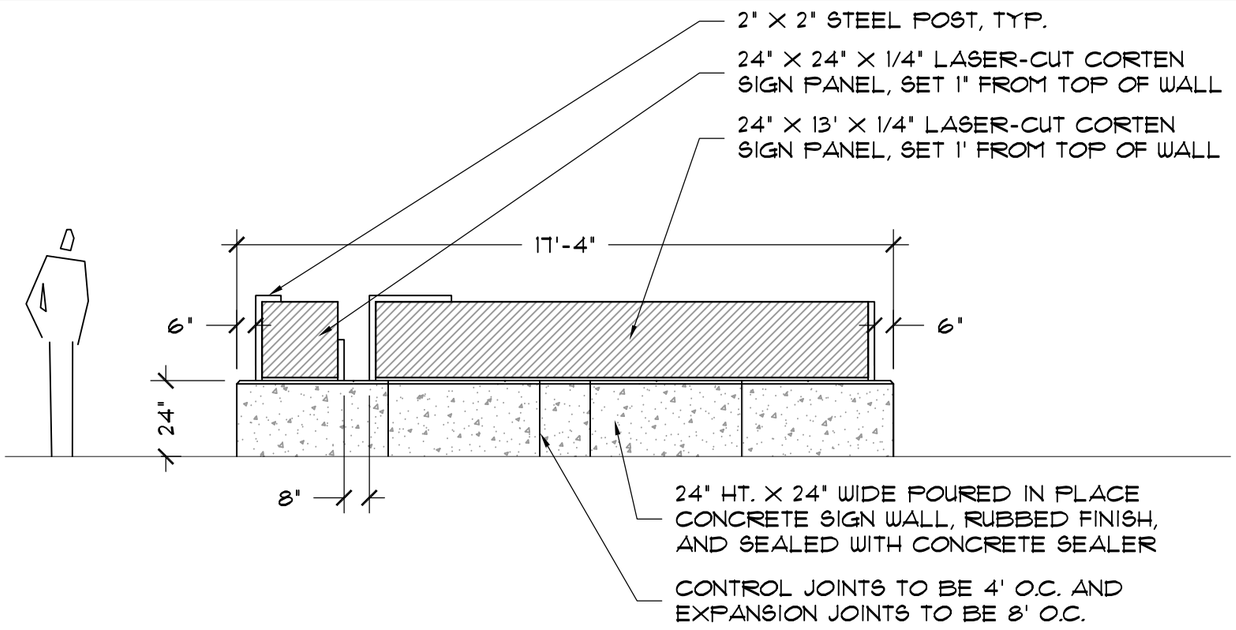

SIGN WALL ELEVATION

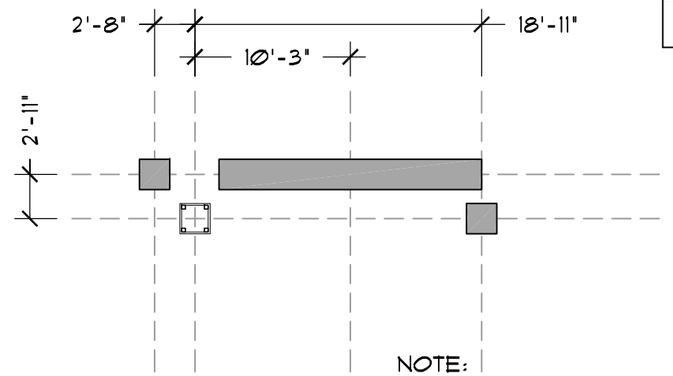

NOTE:
+ DIMENSIONS TAKEN FROM CENTER OF ELEMENTS

SIGN WALL, CONCRETE COLUMN, CORTEN COLUMN PLAN
SCALE: 1" = 10'

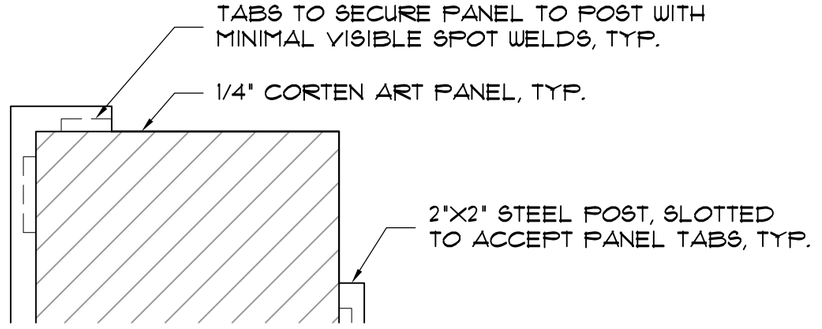

CORTEN PANEL/POST ASSEMBLY DETAIL
SCALE: 1" = 1'-0"

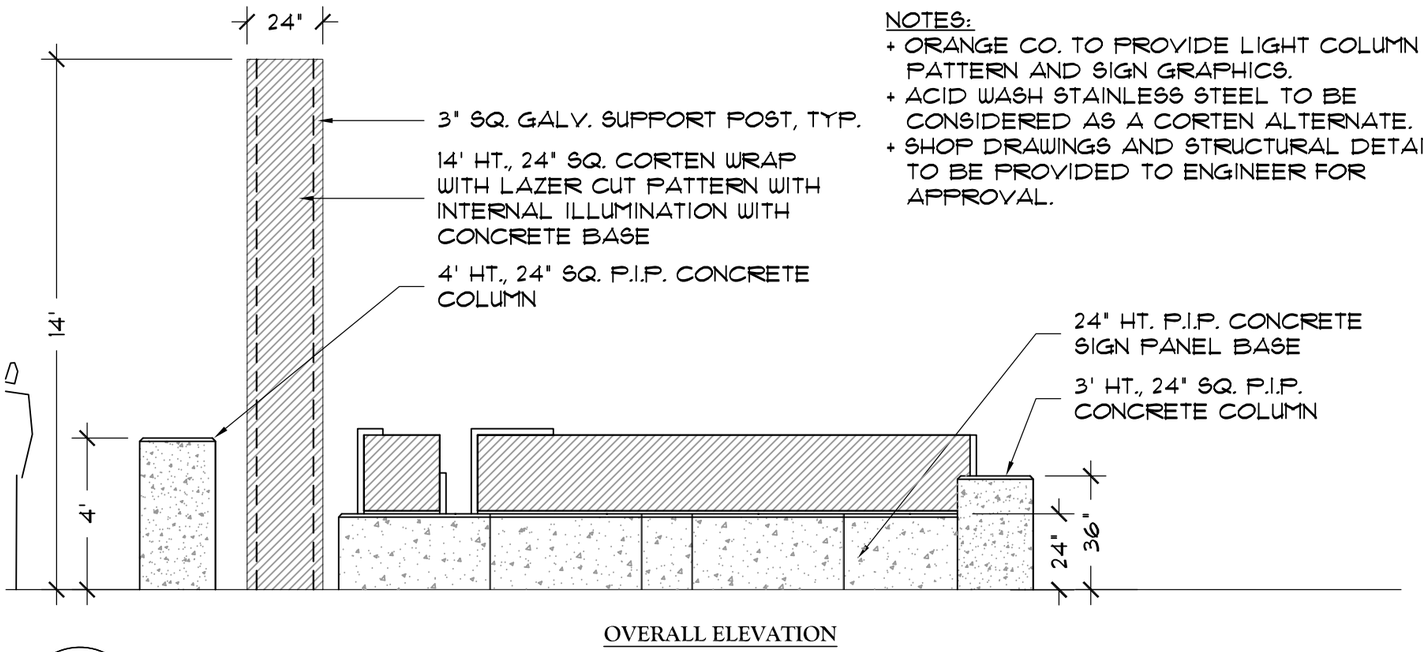

OVERALL ELEVATION

NOTES:
+ ORANGE CO. TO PROVIDE LIGHT COLUMN PATTERN AND SIGN GRAPHICS.
+ ACID WASH STAINLESS STEEL TO BE CONSIDERED AS A CORTEN ALTERNATE.
+ SHOP DRAWINGS AND STRUCTURAL DETAILS TO BE PROVIDED TO ENGINEER FOR APPROVAL.



CHARACTER IMAGE (PROVIDED BY ORANGE COUNTY)

1
H20.726

CORTEN LIGHT COLUMN AND SIGN WALL (MEADOW WOODS)

SCALE: 1/4" = 1'-0"

NOTICE: THE OFFICIAL RECORD OF THIS SHEET IS THE ELECTRONIC FILE SIGNED AND SEALED UNDER RULE 61G10-11.011, F.A.C.

REVISIONS					
DATE	BY	DESCRIPTION	DATE	BY	DESCRIPTION

Christina E. Hite, RLA #1340
DIX.HITE + PARTNERS
150 W. JESSUP AVENUE
LONGWOOD, FLORIDA
TEL 407.667.1777
FAX 407.667.1779
Certificate of Authorization No. LC0000358

STATE OF FLORIDA
DEPARTMENT OF TRANSPORTATION

ROAD NO.	COUNTY	FINANCIAL PROJECT ID
CFRC P2S	ORANGE	423446-9-52-01

CENTRAL FLORIDA COMMUTER RAIL TRANSIT (CFCRT) PHASE 2 SOUTH

HARDSCAPE DETAILS
ART IN TRANSIT DETAILS

SHEET NO.
101

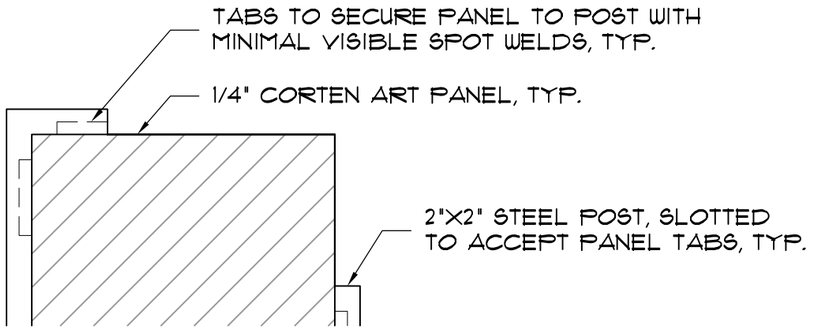

CORTEN PANEL/POST ASSEMBLY DETAIL
SCALE: 1" = 1'-0"

NOTES:
+ ORANGE CO. TO PROVIDE LIGHT COLUMN PATTERN AND SIGN GRAPHICS.
+ ACID WASH STAINLESS STEEL TO BE CONSIDERED AS A CORTEN ALTERNATE.
+ SHOP DRAWINGS AND STRUCTURAL DETAILS TO BE PROVIDED TO ENGINEER FOR APPROVAL.



INSPIRATION IMAGES

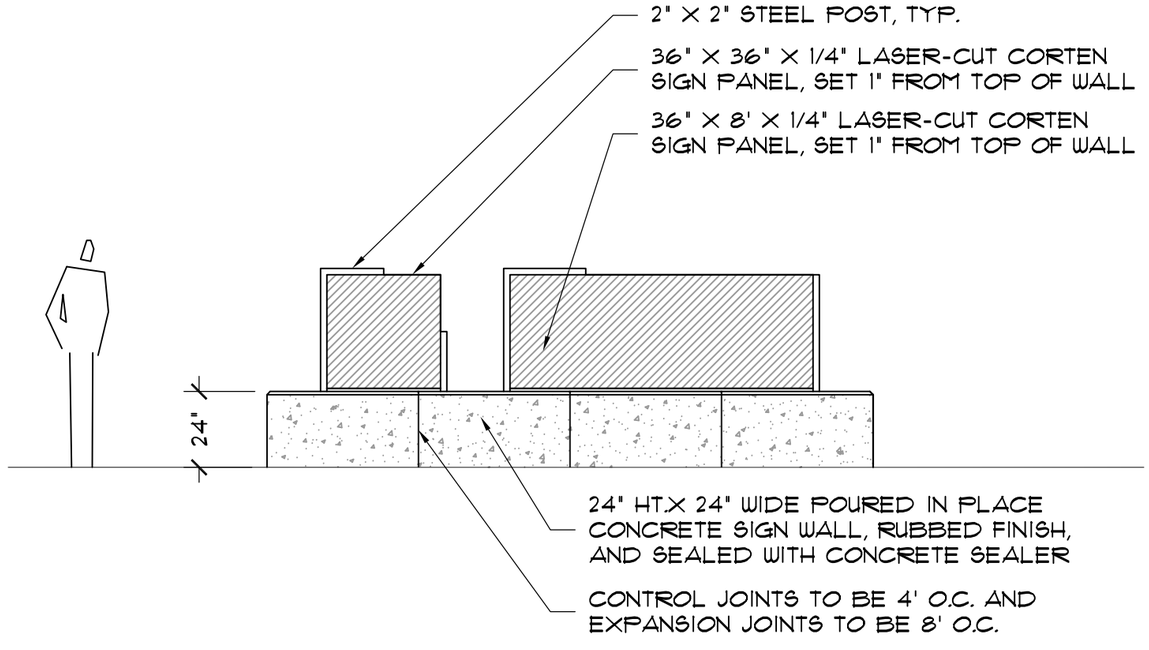

ELEVATION



CHARACTER IMAGES (PROVIDED BY ORANGE COUNTY)

1 / H20.727 **CORTEN SIGN WALL** (MEADOW WOODS)
SCALE: 1/4" = 1'-0"

REVISIONS					
DATE	BY	DESCRIPTION	DATE	BY	DESCRIPTION

Christina E. Hite, RLA #1340
DIX.HITE + PARTNERS
150 W. JESSUP AVENUE
LONGWOOD, FLORIDA
TEL 407.667.1777
FAX 407.667.1779
Certificate of Authorization No. LC0000358

STATE OF FLORIDA
DEPARTMENT OF TRANSPORTATION

ROAD NO.	COUNTY	FINANCIAL PROJECT ID
CFRC P2S	ORANGE	423446-9-52-01

CENTRAL FLORIDA COMMUTER RAIL TRANSIT (CFCRT) PHASE 2 SOUTH

HARDSCAPE DETAILS
ART IN TRANSIT DETAILS

SHEET NO. 102

NOTICE: THE OFFICIAL RECORD OF THIS SHEET IS THE ELECTRONIC FILE SIGNED AND SEALED UNDER RULE 61G10-11.011, F.A.C.

DRAWING NO.
H20.728

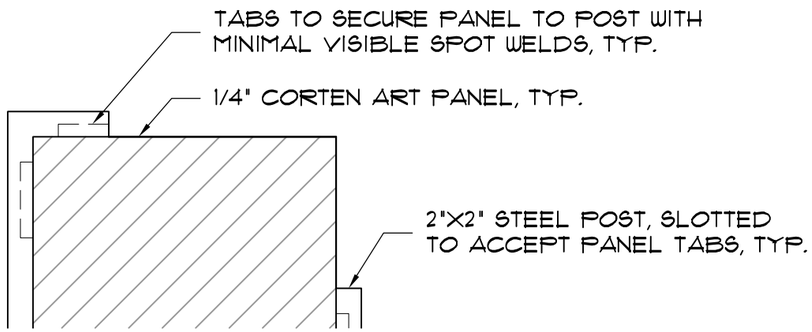

CORTEN PANEL/POST ASSEMBLY DETAIL
SCALE: 1" = 1'-0"

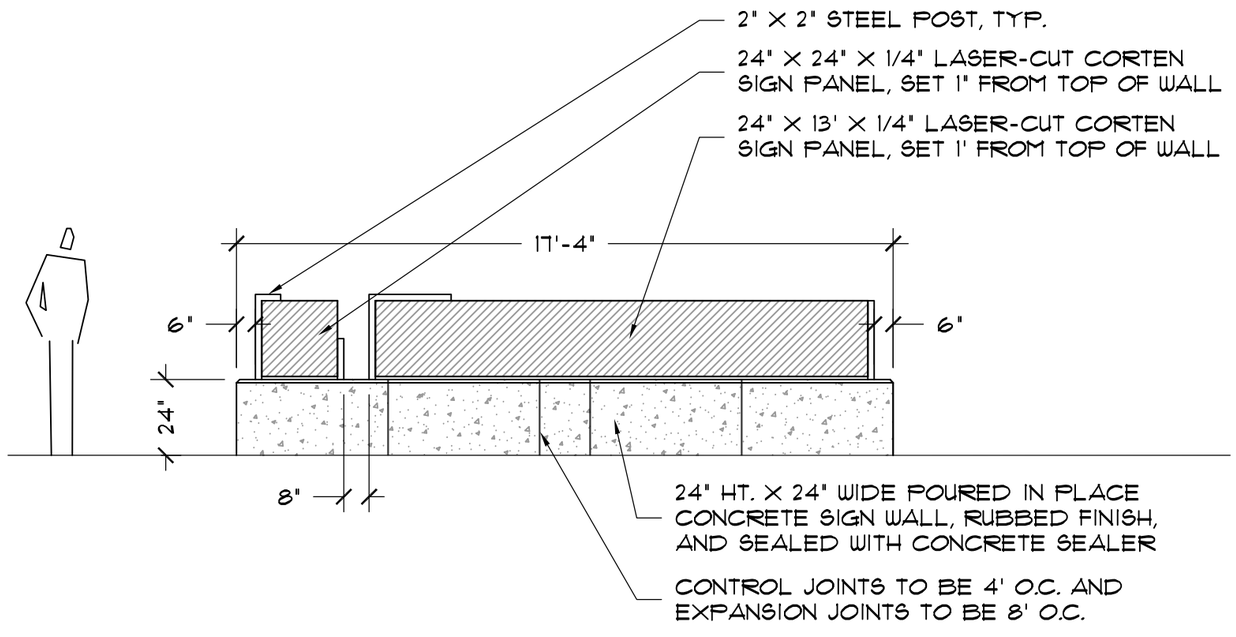

ELEVATION

NOTES:
+ ORANGE CO. TO PROVIDE LIGHT COLUMN PATTERN AND SIGN GRAPHICS.
+ ACID WASH STAINLESS STEEL TO BE CONSIDERED AS A CORTEN ALTERNATE.
+ SHOP DRAWINGS AND STRUCTURAL DETAILS TO BE PROVIDED TO ENGINEER FOR APPROVAL.

1 / H20.728 **CORTEN SIGN WALL** (MEADOW WOODS)
SCALE: 1/4" = 1'-0"

NOTICE: THE OFFICIAL RECORD OF THIS SHEET IS THE ELECTRONIC FILE SIGNED AND SEALED UNDER RULE 61G10-11.011, F.A.C.

REVISIONS					
DATE	BY	DESCRIPTION	DATE	BY	DESCRIPTION

Christina E. Hite, RLA #1340
DIX.HITE + PARTNERS
150 W. JESSUP AVENUE
LONGWOOD, FLORIDA
TEL 407.667.1777
FAX 407.667.1779
Certificate of Authorization No. LC0000358

STATE OF FLORIDA
DEPARTMENT OF TRANSPORTATION

ROAD NO.	COUNTY	FINANCIAL PROJECT ID
CFRC P2S	ORANGE	423446-9-52-01

CENTRAL FLORIDA COMMUTER RAIL TRANSIT (CFCRT) PHASE 2 SOUTH

HARDSCAPE DETAILS
ART IN TRANSIT DETAILS

SHEET NO. 103

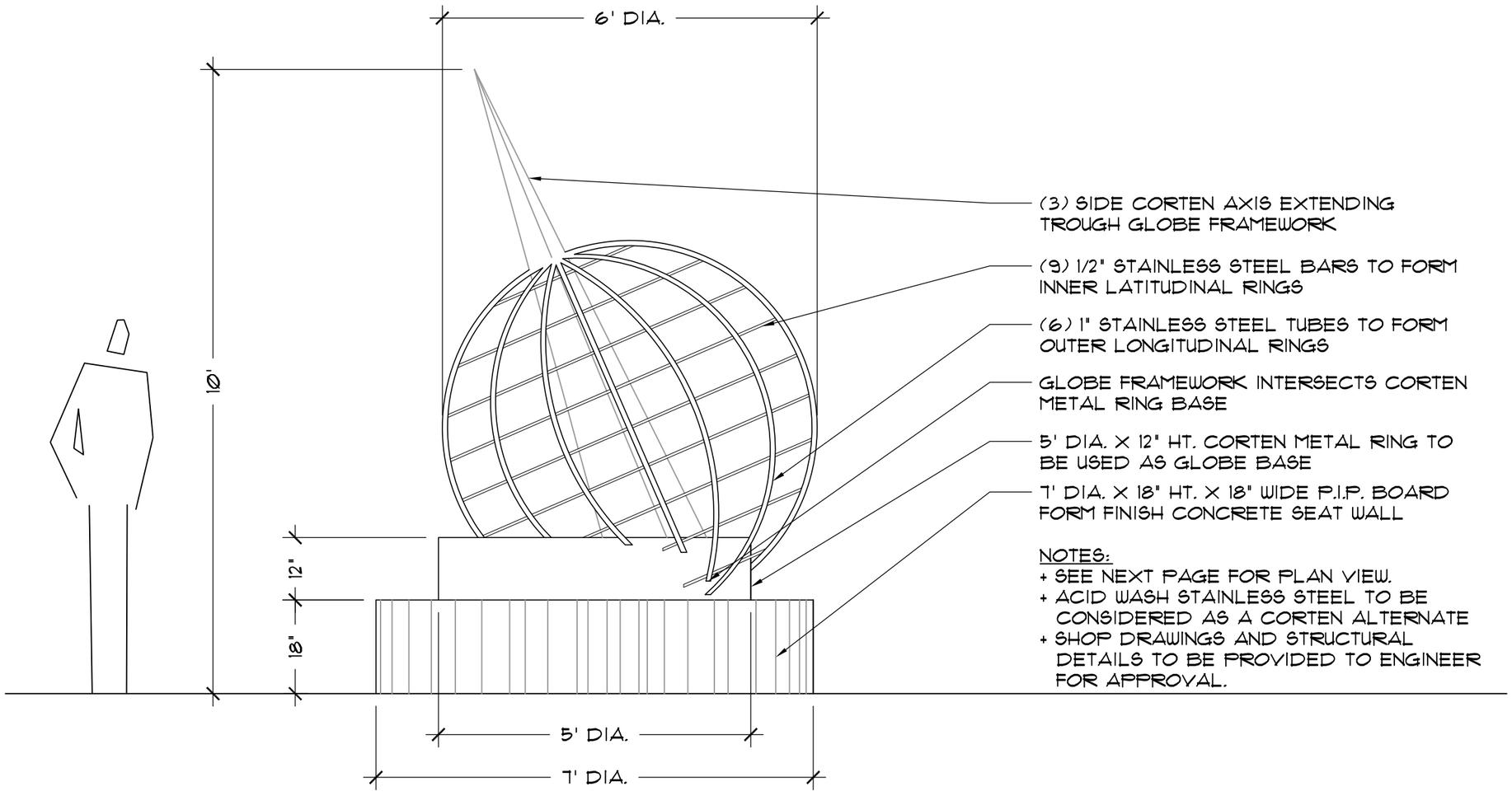

NOTES:
+ SEE NEXT PAGE FOR PLAN VIEW.
+ ACID WASH STAINLESS STEEL TO BE CONSIDERED AS A CORTEN ALTERNATE
+ SHOP DRAWINGS AND STRUCTURAL DETAILS TO BE PROVIDED TO ENGINEER FOR APPROVAL.

1
H20.729

GLOBE SCULPTURE (OSCEOLA)

SCALE: 1/2" = 1'-0"

ELEVATION

NOTICE: THE OFFICIAL RECORD OF THIS SHEET IS THE ELECTRONIC FILE SIGNED AND SEALED UNDER RULE 61G10-11.011, F.A.C.

REVISIONS					
DATE	BY	DESCRIPTION	DATE	BY	DESCRIPTION

Christina E. Hite, RLA #1340
DIX.HITE + PARTNERS
150 W. JESSUP AVENUE
LONGWOOD, FLORIDA
TEL 407.667.1777
FAX 407.667.1779
Certificate of Authorization No. LC0000358

STATE OF FLORIDA
DEPARTMENT OF TRANSPORTATION

ROAD NO.	COUNTY	FINANCIAL PROJECT ID
CFRC P2S	OSCEOLA	423446-9-52-01

CENTRAL FLORIDA COMMUTER RAIL TRANSIT (CFCRT) PHASE 2 SOUTH

HARDSCAPE DETAILS
ART IN TRANSIT DETAILS

SHEET NO. 104

DRAWING NO.
H20.730

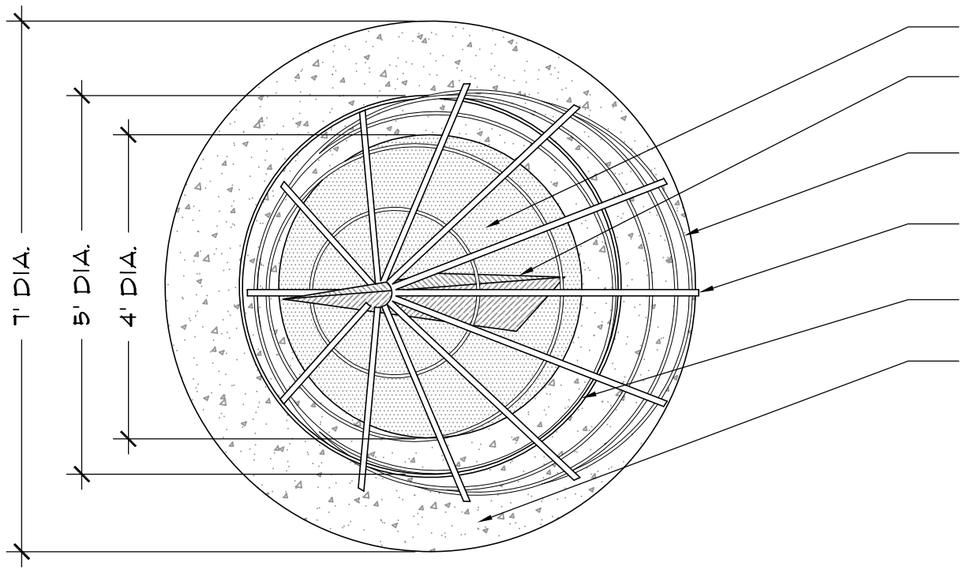

4' DIA. LANDSCAPE AREA AT GLOBE BASE

(3) SIDE CORTEN AXIS EXTENDING TROUGH GLOBE FRAMEWORK

(9) 1/2" STAINLESS STEEL BARS TO FORM INNER LATITUDINAL RINGS

(6) 1" STAINLESS STEEL TUBES TO FORM OUTER LONGITUDINAL RINGS

5' DIA. X 12" HT. CORTEN METAL RING TO BE USED AS GLOBE BASE

7' DIA. X 18" HT. X 18" WIDE P.I.P. BOARD FORM FINISH CONCRETE SEAT WALL

NOTES:
+ SEE NEXT PAGE FOR ELEVATION.
+ ACID WASH STAINLESS STEEL TO BE CONSIDERED AS A CORTEN ALTERNATE
+ SHOP DRAWINGS AND STRUCTURAL DETAILS TO BE PROVIDED TO ENGINEER FOR APPROVAL.

1
H20.730

GLOBE SCULPTURE (OSCEOLA)

SCALE: 1/2" = 1'-0"

PLAN

NOTICE: THE OFFICIAL RECORD OF THIS SHEET IS THE ELECTRONIC FILE SIGNED AND SEALED UNDER RULE 61G10-11.011, F.A.C.

REVISIONS					
DATE	BY	DESCRIPTION	DATE	BY	DESCRIPTION

Christina E. Hite, RLA #1340
DIX.HITE + PARTNERS
150 W. JESSUP AVENUE
LONGWOOD, FLORIDA
TEL 407.667.1777
FAX 407.667.1779
Certificate of Authorization No. LC0000358

STATE OF FLORIDA
DEPARTMENT OF TRANSPORTATION

ROAD NO.	COUNTY	FINANCIAL PROJECT ID
CFRC P2S	OSCEOLA	423446-9-52-01

CENTRAL FLORIDA COMMUTER RAIL TRANSIT (CFCRT) PHASE 2 SOUTH

HARDSCAPE DETAILS
ART IN TRANSIT DETAILS

SHEET NO.
105

DRAWING NO.
H20.731

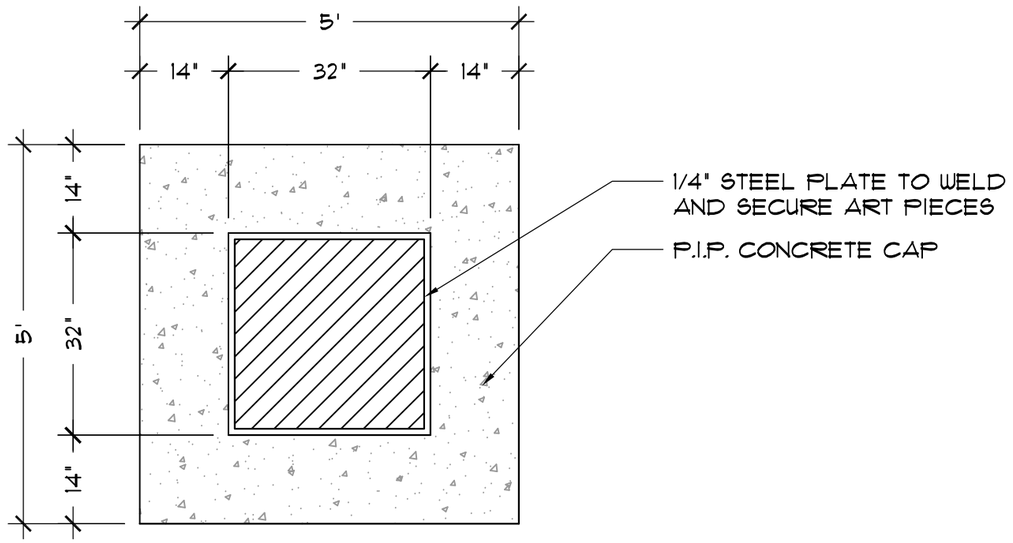

PLAN

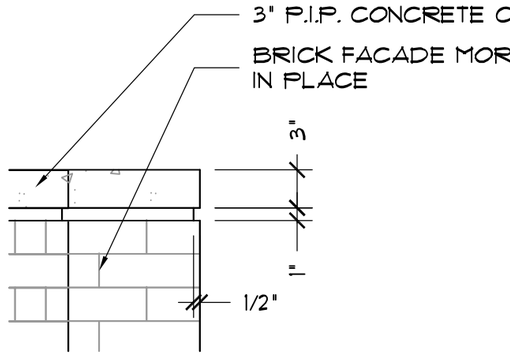

P.I.P. CONCRETE CAP DETAIL
SCALE: 1" = 1'-0"

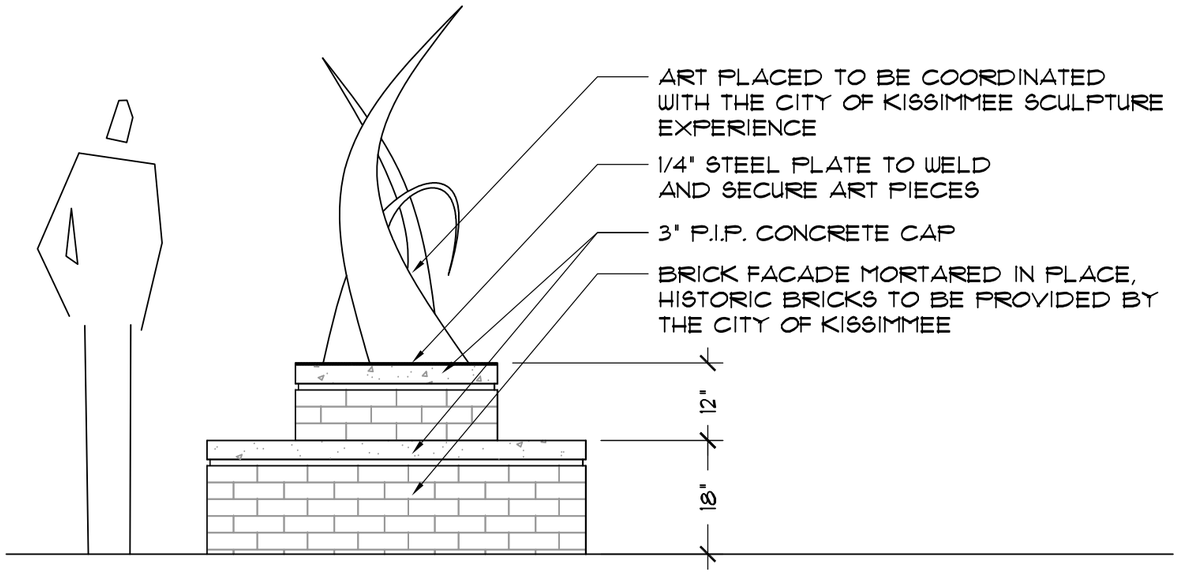

ELEVATION

NOTE:
+ SHOP DRAWINGS AND STRUCTURAL DETAILS TO BE PROVIDED TO ENGINEER FOR APPROVAL.

1
H20.731

BRICK SCULPTURE PEDESTAL (KISSIMMEE)

SCALE: 1/2" = 1'-0"

NOTICE: THE OFFICIAL RECORD OF THIS SHEET IS THE ELECTRONIC FILE SIGNED AND SEALED UNDER RULE 61G10-11.011, F.A.C.

REVISIONS					
DATE	BY	DESCRIPTION	DATE	BY	DESCRIPTION

Christina E. Hite, RLA #1340
DIX.HITE + PARTNERS
150 W. JESSUP AVENUE
LONGWOOD, FLORIDA
TEL 407.667.1777
FAX 407.667.1779
Certificate of Authorization No. LC0000358

STATE OF FLORIDA
DEPARTMENT OF TRANSPORTATION

ROAD NO.	COUNTY	FINANCIAL PROJECT ID
CFRC P2S	OSCEOLA	423446-9-52-01

CENTRAL FLORIDA COMMUTER RAIL TRANSIT (CFCRT) PHASE 2 SOUTH

HARDSCAPE DETAILS
ART IN TRANSIT DETAILS

SHEET NO.
106

DRAWING NO.
H20.732

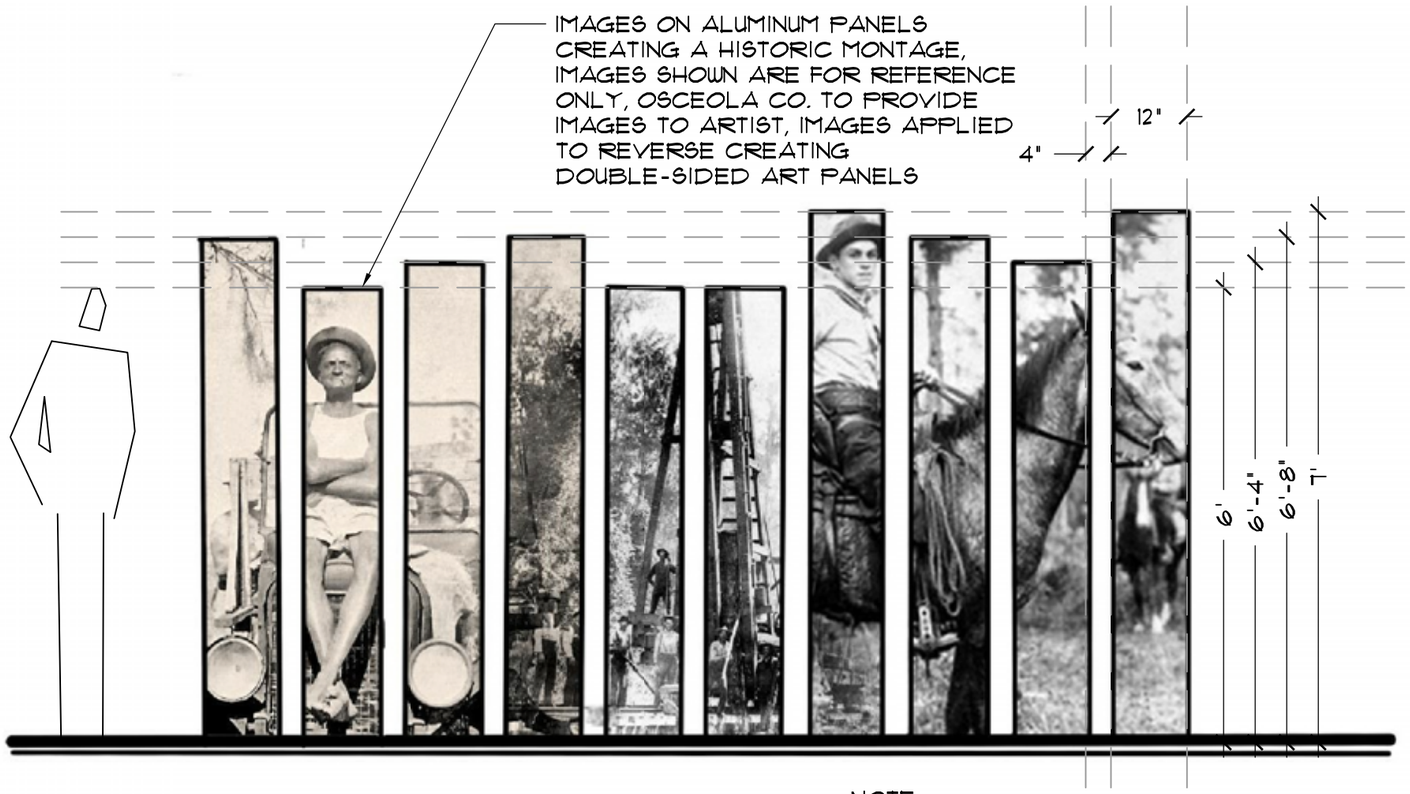

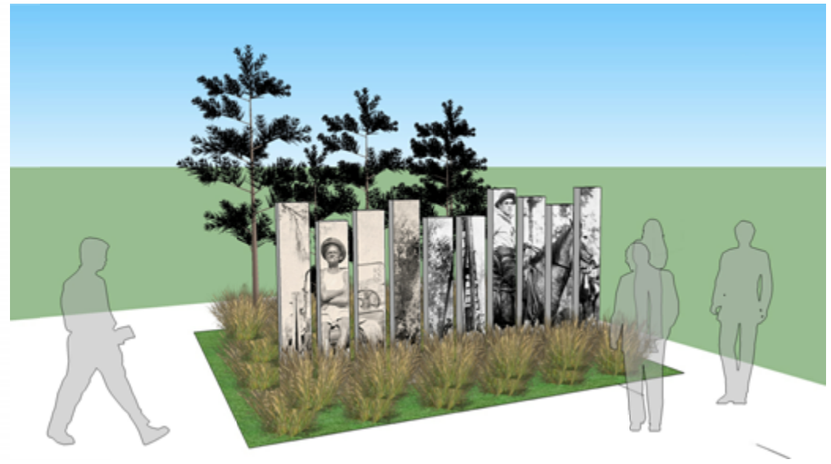

CHARACTER IMAGES





INSPIRATION IMAGES

NOTE:

+ DETAILS AND IMAGES SHOWN FOR INSPIRATION ONLY. ART SHALL DEPICT HISTORIC IMAGES RELATING TO OSCEOLA COUNTY. IMAGES DEPICTED HERE ARE REPRESENTATIVE OF ACCEPTABLE IMAGES.
+ ART PANEL SHALL BE CONSTRUCTED OF ¼" ALUMINUM SHEETING WELDED TO ALUMINUM FRAME. FRAME TO BE CONSTRUCTED OF 2" SQUARE TUBULAR ALUMINUM AND SHALL BE ATTACHED TO CONCRETE FOOTING. CORNERS OF FRAME TO HAVE 45 DEGREE WELDED MITERED CORNERS.
+ IMAGE TO BE APPLIED TO ALUMINUM 'CANVAS' WITH HIGH GRADE PAINT OR INK. IMAGE PAINT OR INK TØ BE OUTDOOR RATED AND UV RESISTANT. A WATER-BASED UV CLEAR COAT TO BE APPLIED OVER IMAGE.
+ ARTIST TO SUBMIT CONCEPT TO ENGINEER FOR APPROVAL.
+ SHOP DRAWINGS AND STRUCTURAL DETAILS TO BE PROVIDED TO ENGINEER FOR APPROVAL.

1
H20.732

ART IN TRANSIT (POINCIANA)

SCALE: 1/2" = 1'-0"

REVISIONS					
DATE	BY	DESCRIPTION	DATE	BY	DESCRIPTION

Christina E. Hite, RLA #1340
DIX.HITE + PARTNERS
150 W. JESSUP AVENUE
LONGWOOD, FLORIDA
TEL 407.667.1777
FAX 407.667.1779
Certificate of Authorization No. LC0000358

STATE OF FLORIDA
DEPARTMENT OF TRANSPORTATION

ROAD NO.	COUNTY	FINANCIAL PROJECT ID
CFRC P2S	OSCEOLA	423446-9-52-01

CENTRAL FLORIDA COMMUTER RAIL TRANSIT (CFCRT) PHASE 2 SOUTH

HARDSCAPE DETAILS
ART IN TRANSIT DETAILS

SHEET NO.
107

NOTICE: THE OFFICIAL RECORD OF THIS SHEET IS THE ELECTRONIC FILE SIGNED AND SEALED UNDER RULE 61G10-11.011, F.A.C.

Hardscape Designed By:
DIX.HITE
+ PARTNERS
150 W. JESSUP AVENUE
LONGWOOD, FLORIDA
TEL 407.667.1777
FAX 407.667.1779
Christina E. Hite, RLA #1340
Certificate of Authorization No. LC0000358

DRAWING NO.
H20.763

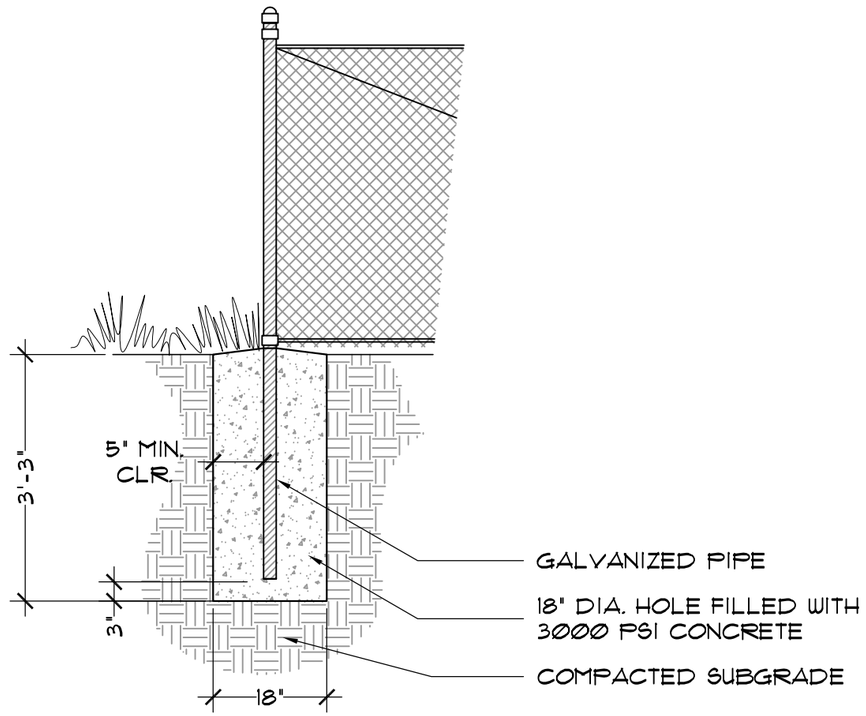

NOTES:
+ SEE DETAIL 1/H20.711 FOR DESIGN ELEVATION.

1 / H20.763

VINYL COATED CHAIN LINK FENCE (MEADOW WOODS, OSCEOLA, KISSIMMEE, POINCIANA)

SCALE: 1/2" = 1'-0"

SECTION

NOTICE: THE OFFICIAL RECORD OF THIS SHEET IS THE ELECTRONIC FILE SIGNED AND SEALED UNDER RULE 61G15-23.003, F.A.C.

REVISIONS					
DATE	BY	DESCRIPTION	DATE	BY	DESCRIPTION

McElroyEngineering LLC
STRUCTURAL DESIGN GROUP
1835 EDGEWATER DR., ORLANDO, FL. 32804
P: 407.245.8775 | F: 407.245.8744
www.mcelroyeng.com
CERTIFICATE OF AUTHORIZATION - 8822
CRAIG E. McELROY, P.E. NO. 44741 PROJECT NO. 3910-01

STATE OF FLORIDA
DEPARTMENT OF TRANSPORTATION

ROAD NO.	COUNTY	FINANCIAL PROJECT ID
CFRC P2S	VARIOUS	423446-9-52-01

CENTRAL FLORIDA COMMUTER RAIL TRANSIT (CFCRT) PHASE 2 SOUTH

HARDSCAPE DETAILS
STRUCTURAL DETAILS

SHEET NO. 108

Hardscape Designed By:
DIX.HITE
+ PARTNERS
150 W. JESSUP AVENUE
LONGWOOD, FLORIDA
TEL 407.667.1777
FAX 407.667.1779
Christina E. Hite, RLA #1340
Certificate of Authorization No. LC0000358

DRAWING NO.
H20.764

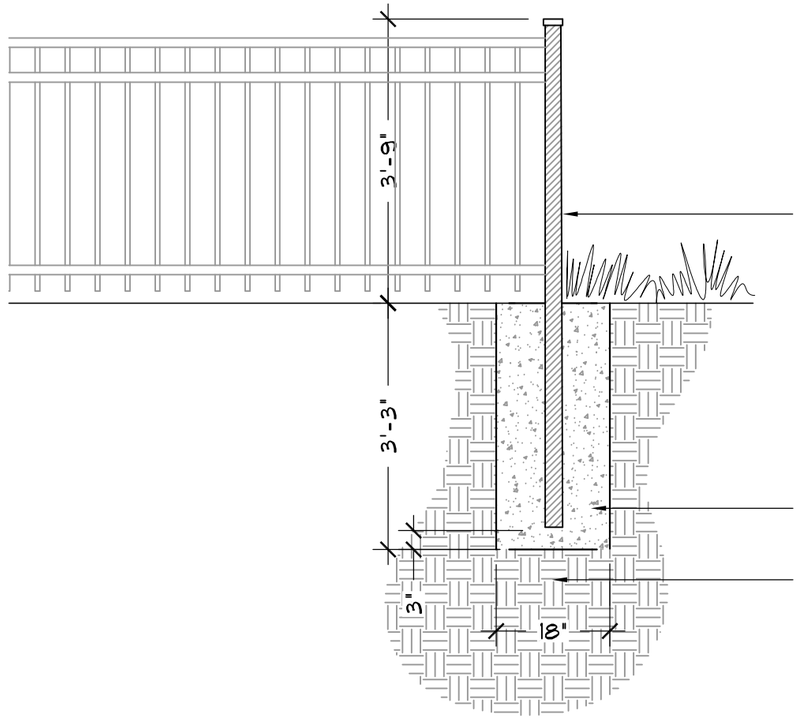

2 1/2" SQ. METAL POSTS, 6'-6" O.C. MAX. SPACING

18" DIA. HOLE FILLED WITH 3000 PSI CONCRETE

COMPACT SUBGRADE

NOTES:
+ ALL DOWELS TO BE TIED IN PLACE BEFORE PLACING CONCRETE.
+ SEE DETAIL 1/H20.712 FOR DESIGN INFORMATION.

1 / H20.764 **DECORATIVE PICKET FENCE** (MEADOW WOODS, OSCEOLA, POINCIANA)
SCALE: 1/2" = 1'-0"

SECTION

NOTICE: THE OFFICIAL RECORD OF THIS SHEET IS THE ELECTRONIC FILE SIGNED AND SEALED UNDER RULE 61G15-23.003, F.A.C.

REVISIONS					
DATE	BY	DESCRIPTION	DATE	BY	DESCRIPTION

McElroyEngineering LLC
STRUCTURAL DESIGN GROUP
1835 EDGEWATER DR. ORLANDO, FL. 32804
P: 407.245.8775 | F: 407.245.8744
www.mcelroyeng.com
CERTIFICATE OF AUTHORIZATION - 8822
CRAIG E. McELROY, P.E. NO. 44741 PROJECT NO. 3910-01

STATE OF FLORIDA
DEPARTMENT OF TRANSPORTATION

ROAD NO.	COUNTY	FINANCIAL PROJECT ID
CFRC P2S	VARIOUS	423446-9-52-01

CENTRAL FLORIDA COMMUTER RAIL TRANSIT (CFCRT) PHASE 2 SOUTH

HARDSCAPE DETAILS
STRUCTURAL DETAILS

SHEET NO.
109

Hardscape Designed By:
DIX.HITE
+ PARTNERS
150 W. JESSUP AVENUE
LONGWOOD, FLORIDA
TEL 407.667.1777
FAX 407.667.1779
Christina E. Hite, RLA #1340
Certificate of Authorization No. LC0000358

DRAWING NO.
H20.766

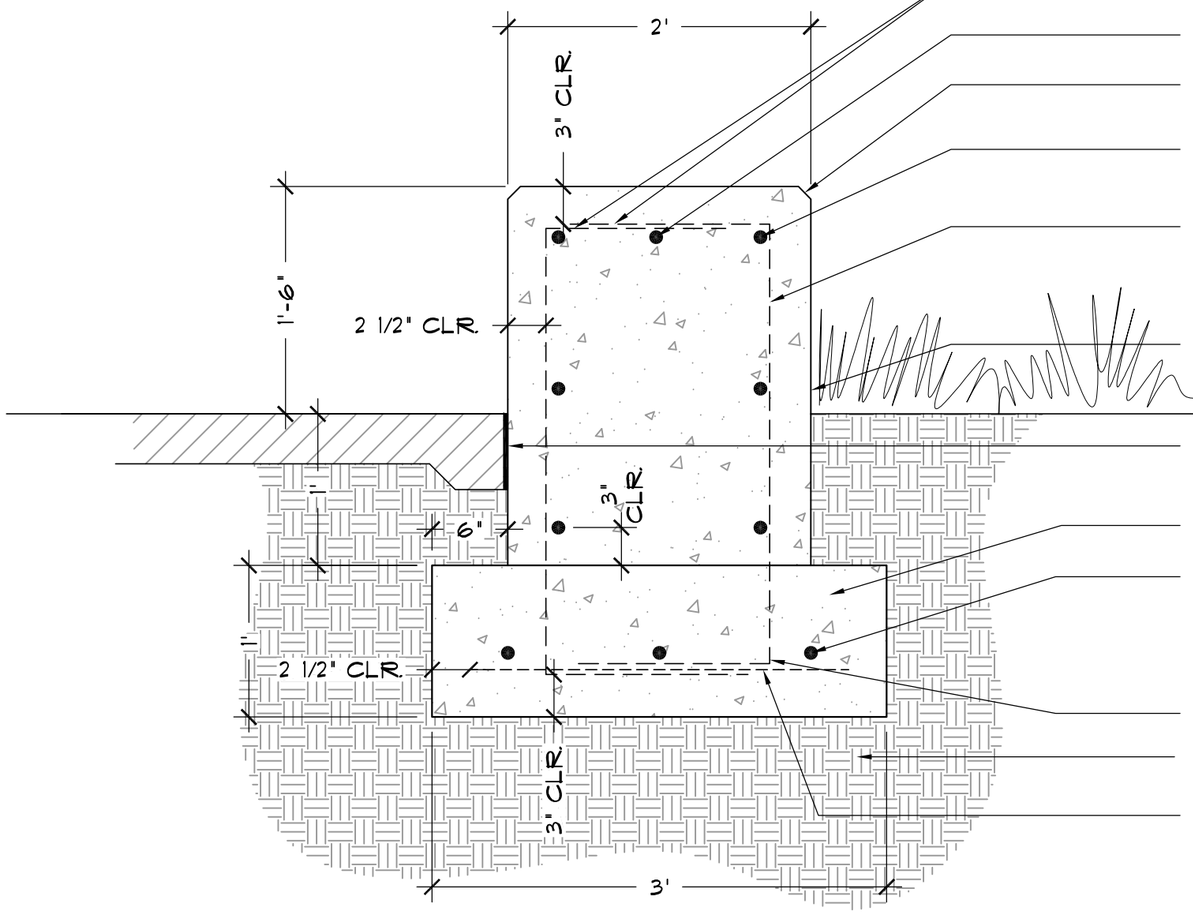

18" LONG 90 DEGREE HOOK

CONTINUOUS #5 TOP

1" CHAMFERED EDGES

#5 REBAR, CONTINUOUS, 12" O.C. (VERTICALLY)

#5 REBAR, 16" O.C., WITH A STANDARD ACI 90 DEGREE 18" HOOK

POURED IN PLACE CONCRETE WALL WITH 4000 PSI CONCRETE

PROVIDE EXPANSION JOINT BETWEEN WALL AND ADJACENT PAVING

CONCRETE FOOTING WITH 3000 PSI CONCRETE

(3) #5 REBAR, CONTINUOUS, 12" O.C. (HORIZONTZALLY)

STANDARD ACI 90 DEGREE HOOK

COMPACT SUBGRADE

#4 X 2'-6" LONG REBAR, 16" O.C., TRANSVERSE

NOTES:
+ ALL DOWELS TO BE TIED IN PLACE BEFORE PLACING CONCRETE.
+ SEE DETAIL 1/H20.713 AND DETAIL 1/H20.714 FOR DESIGN INFORMATION.

1
H20.766

CONCRETE SEATING AND CONCRETE SEAT WALL (MEADOW WOODS, OSCEOLA, POINCIANA)

SCALE: 1" = 1'-0"

SECTION

NOTICE: THE OFFICIAL RECORD OF THIS SHEET IS THE ELECTRONIC FILE SIGNED AND SEALED UNDER RULE 61G15-23.003, F.A.C.

REVISIONS					
DATE	BY	DESCRIPTION	DATE	BY	DESCRIPTION

McElroyEngineering LLC
STRUCTURAL DESIGN GROUP
1835 EDGEWATER DR, ORLANDO, FL, 32804
P: 407.245.8775 | F: 407.245.8744
www.mcelroyeng.com
CERTIFICATE OF AUTHORIZATION - 8822
CRAIG E. McELROY, P.E. NO. 44741
PROJECT NO. 3910-01

STATE OF FLORIDA
DEPARTMENT OF TRANSPORTATION

ROAD NO.	COUNTY	FINANCIAL PROJECT ID
CFRC P2S	VARIOUS	423446-9-52-01

CENTRAL FLORIDA COMMUTER RAIL TRANSIT (CFCRT) PHASE 2 SOUTH

HARDSCAPE DETAILS
STRUCTURAL DETAILS

SHEET NO.
III

Hardscape Designed By:
DIX.HITE
+ PARTNERS
150 W. JESSUP AVENUE
LONGWOOD, FLORIDA
TEL 407.667.1777
FAX 407.667.1779
Christina E. Hite, RLA #1340
Certificate of Authorization No. LC0000358

DRAWING NO.
H20.767

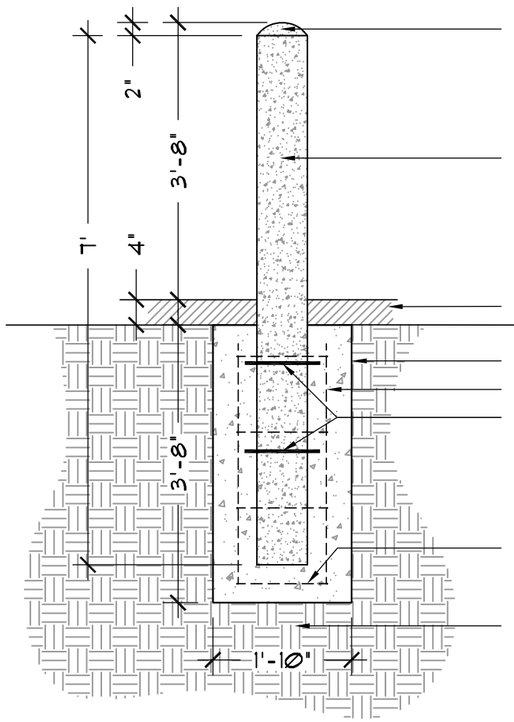

ROUNDED OFF CONCRETE TOP

8" DIAMETER STANDARD WEIGHT STEEL PIPE, FILLED WITH 3000 P.S.I. CONCRETE, PIPE TO RECEIVE HIGH PERFORMANCE PAINTED FINISH

CONCRETE WALKWAY

3000 PSI CONCRETE

(4) #3 VERTICAL REBAR

(2) #4 BARS X 1'-4" LONG TO PROTRUDE FROM OUTSIDE OF STEEL PIPE INTO FOOTING TO PREVENT PIPE FROM ROTATING, (1) TOP AND (1) MID.

(4) #3 HORIZONTAL REBAR TIES, 12" O.C.

COMPACT SUBGRADE

NOTES:
+ ALL DOWELS TO BE TIED IN PLACE BEFORE PLACING CONCRETE.
+ SEE DETAIL 1/H20.715 FOR DESIGN INFORMATION.

1
H20.767

BOLLARD (MEADOW WOODS, OSCEOLA, KISSIMMEE, POINCIANA)

SCALE: 1/2" = 1'-0"

SECTION

NOTICE: THE OFFICIAL RECORD OF THIS SHEET IS THE ELECTRONIC FILE SIGNED AND SEALED UNDER RULE 61G15-23.003, F.A.C.

REVISIONS					
DATE	BY	DESCRIPTION	DATE	BY	DESCRIPTION

McElroyEngineering
STRUCTURAL DESIGN GROUP
1835 EDGEWATER DR, ORLANDO, FL, 32804
P: 407.245.8775 | F: 407.245.8744
www.mcelroyeng.com
CERTIFICATE OF AUTHORIZATION - 8822
CRAIG E. McELROY, P.E. NO. 44741 PROJECT NO. 3910-01

STATE OF FLORIDA
DEPARTMENT OF TRANSPORTATION

ROAD NO.	COUNTY	FINANCIAL PROJECT ID
CFRC P2S	VARIOUS	423446-9-52-01

CENTRAL FLORIDA COMMUTER RAIL TRANSIT (CFCRT) PHASE 2 SOUTH

HARDSCAPE DETAILS
STRUCTURAL DETAILS

SHEET NO.
112

Hardscape Designed By:
DIX.HITE
+ PARTNERS
150 W. JESSUP AVENUE
LONGWOOD, FLORIDA
TEL 407.667.1777
FAX 407.667.1779
Christina E. Hite, RLA #1340
Certificate of Authorization No. LC0000358

DRAWING NO.
H20.768

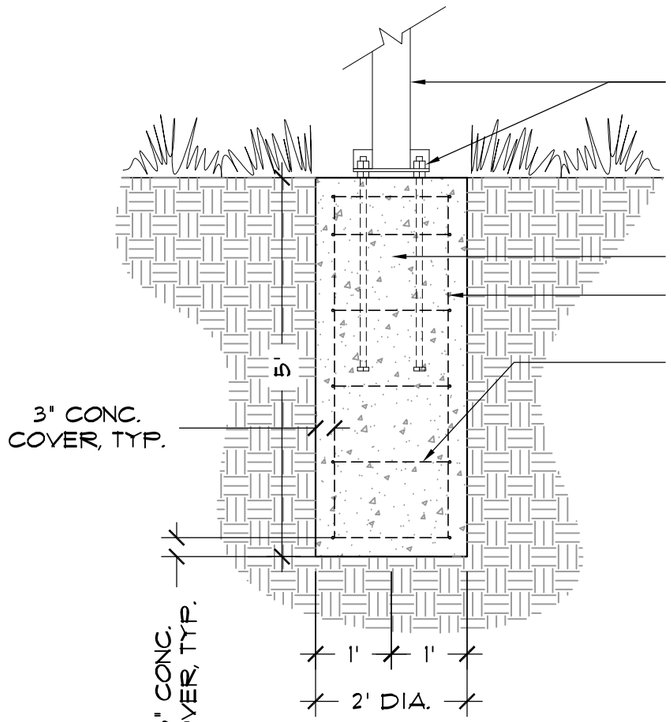

NOTES:
+ ALL DOWELS TO BE TIED IN PLACE BEFORE PLACING CONCRETE.
+ SEE DETAIL 3/H20.721 FOR DESIGN INFORMATION.

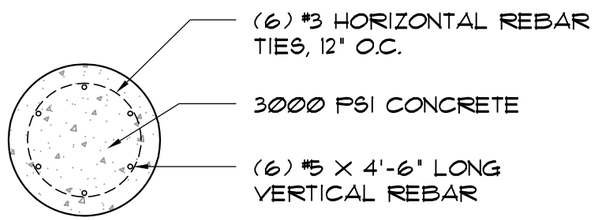

PIER CROSS SECTION

1
H20.768

FLAG POLE (OSCEDLA)

SCALE: 1/2" = 1'-0"

SECTION

REVISIONS					
DATE	BY	DESCRIPTION	DATE	BY	DESCRIPTION

McElroyEngineering LLC
STRUCTURAL DESIGN GROUP
1835 EDGEWATER DR., ORLANDO, FL. 32804
P: 407.245.8775 | F: 407.245.8744
www.mcelroyeng.com
CERTIFICATE OF AUTHORIZATION - 8822
CRAIG E. McELROY, P.E. NO. 44741 PROJECT NO. 3910-01

STATE OF FLORIDA
DEPARTMENT OF TRANSPORTATION

ROAD NO.	COUNTY	FINANCIAL PROJECT ID
CFRC P2S	OSCEOLA	423446-9-52-01

CENTRAL FLORIDA COMMUTER RAIL TRANSIT (CFCRT) PHASE 2 SOUTH

HARDSCAPE DETAILS
STRUCTURAL DETAILS

SHEET NO.
113

NOTICE: THE OFFICIAL RECORD OF THIS SHEET IS THE ELECTRONIC FILE SIGNED AND SEALED UNDER RULE 61G15-23.003, F.A.C.

DRAWING NO.
L20.705

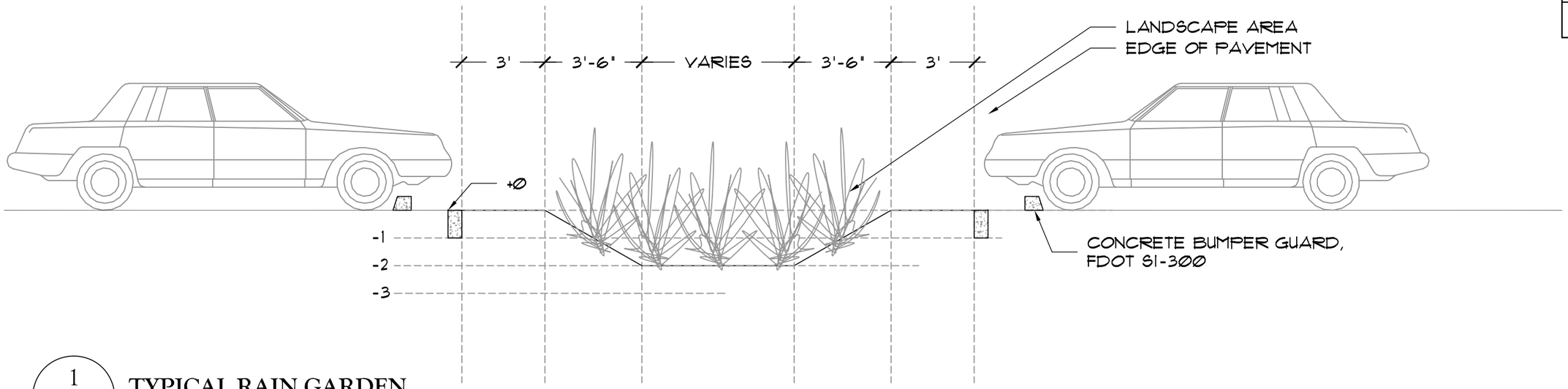

1
L20.705

TYPICAL RAIN GARDEN

SCALE: 1"=4'-0"

SECTION

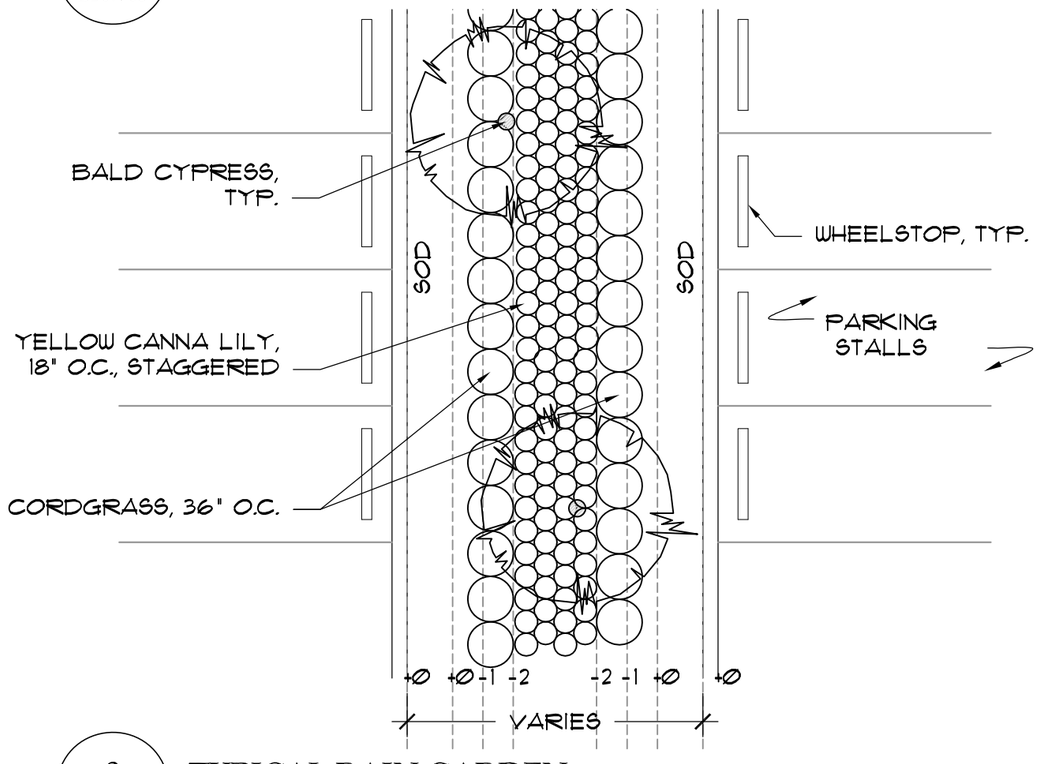

2
L20.705

TYPICAL RAIN GARDEN

SCALE: 1"=10'-0"

PLAN

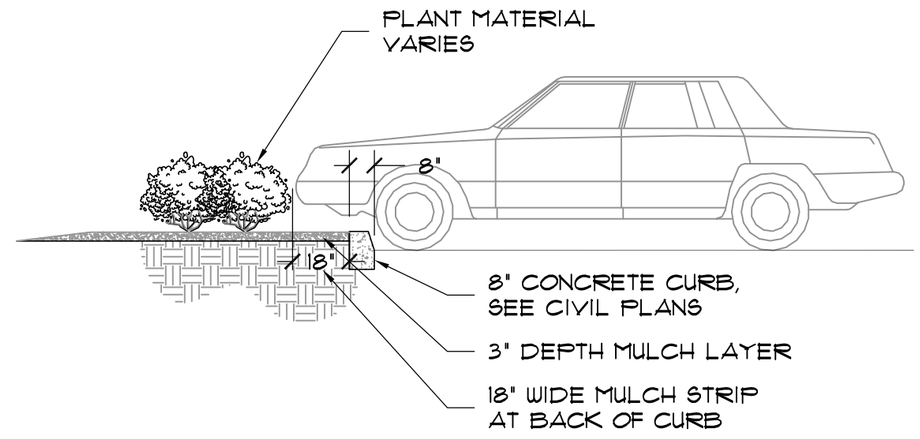

3
L20.705

TYPICAL PARKING MULCH STRIP

SCALE: 1"=4'-0"

SECTION

NOTE:
+ SEE LANDSCAPE PLANS FOR LAYOUT AND PLANT MATERIAL SELECTIONS.

NOTICE: THE OFFICIAL RECORD OF THIS SHEET IS THE ELECTRONIC FILE SIGNED AND SEALED UNDER RULE 61G10-11.011, F.A.C.

REVISIONS					
DATE	BY	DESCRIPTION	DATE	BY	DESCRIPTION

Christina E. Hite, RLA #1340
DIX.HITE + PARTNERS
150 W. JESSUP AVENUE
LONGWOOD, FLORIDA
TEL 407.667.1777
FAX 407.667.1779
Certificate of Authorization No. LC0000358

STATE OF FLORIDA
DEPARTMENT OF TRANSPORTATION

ROAD NO.	COUNTY	FINANCIAL PROJECT ID
CFRC P2S	ORANGE	423446-9-52-01

CENTRAL FLORIDA COMMUTER RAIL TRANSIT (CFCRT) PHASE 2 SOUTH

TYPICAL LANDSCAPE DETAILS MEADOW WOODS STATION

SHEET NO.
114

DRAWING NO.
L20.706

NOTE:
+ SEE LANDSCAPE PLANS FOR LAYOUT AND PLANT MATERIAL SELECTIONS.

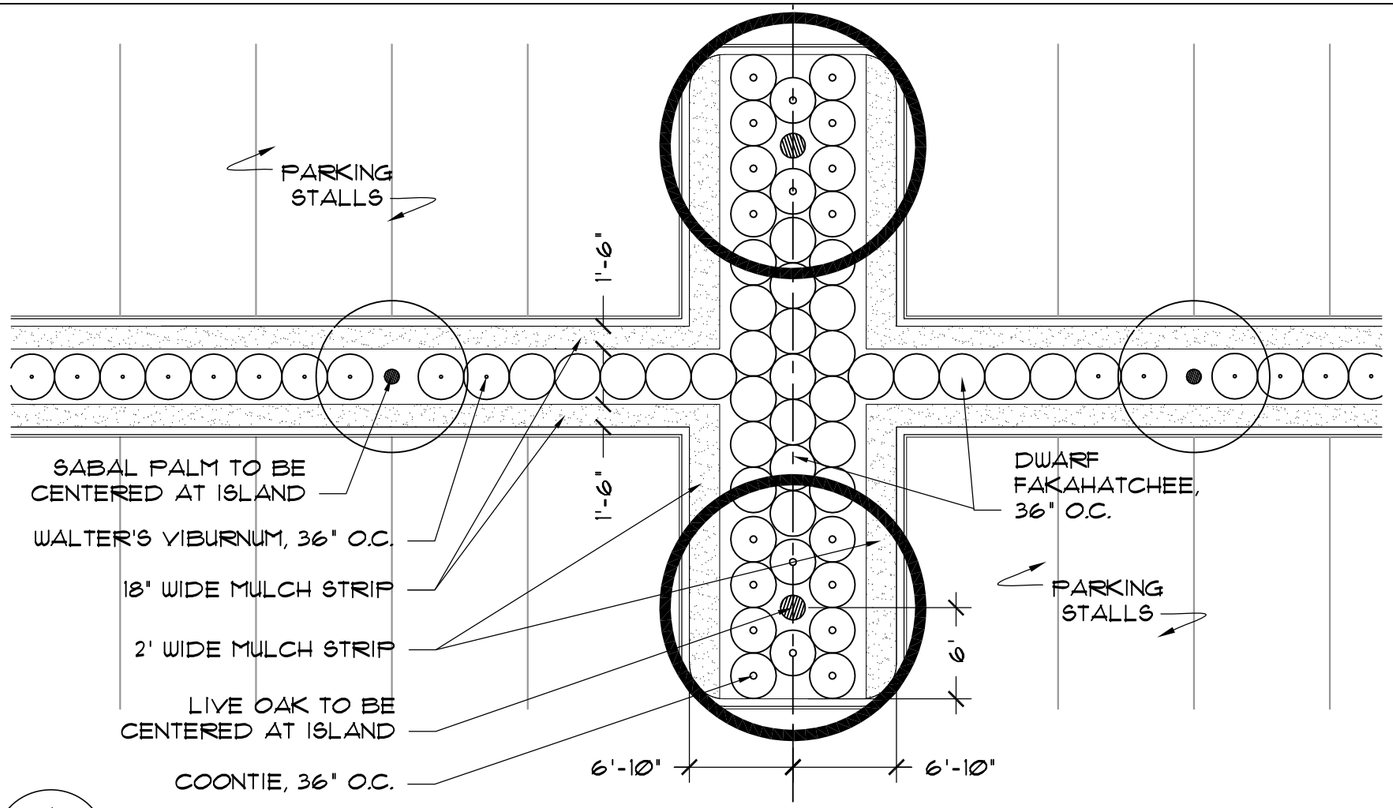

1 / L20.706
TYPICAL CANOPY ISLAND AT MEDIAN
SCALE: 1"=10'-0" PLAN

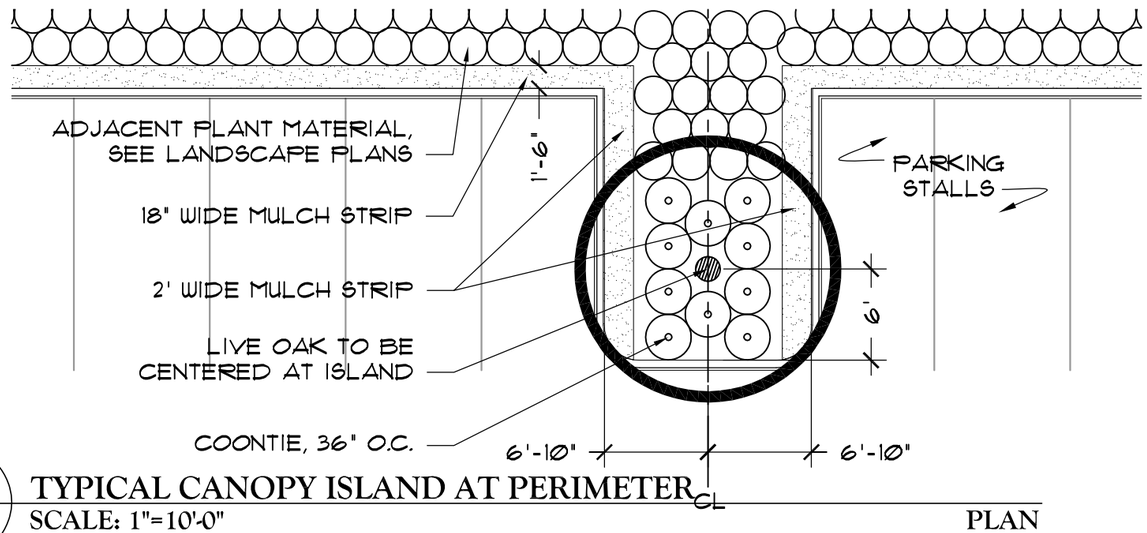

2 / L20.706
TYPICAL CANOPY ISLAND AT PERIMETER
SCALE: 1"=10'-0" PLAN

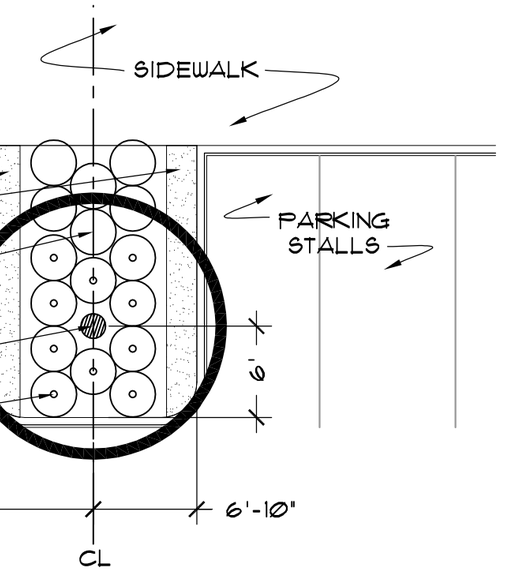

3 / L20.706
TYPICAL CANOPY ISLAND ADJACENT TO SIDEWALK
SCALE: 1"=10'-0" PLAN

NOTICE: THE OFFICIAL RECORD OF THIS SHEET IS THE ELECTRONIC FILE SIGNED AND SEALED UNDER RULE 61G10-11.011, F.A.C.

REVISIONS					
DATE	BY	DESCRIPTION	DATE	BY	DESCRIPTION

Christina E. Hite, RLA #1340
DIX.HITE + PARTNERS
150 W. JESSUP AVENUE
LONGWOOD, FLORIDA
TEL 407.667.1777
FAX 407.667.1779
Certificate of Authorization No. LC0000358

STATE OF FLORIDA
DEPARTMENT OF TRANSPORTATION

ROAD NO.	COUNTY	FINANCIAL PROJECT ID
CFRC P2S	ORANGE	423446-9-52-01

CENTRAL FLORIDA COMMUTER RAIL TRANSIT (CFCRT) PHASE 2 SOUTH

TYPICAL LANDSCAPE DETAILS MEADOW WOODS STATION

SHEET NO. 115

DRAWING NO.
L20.707

NOTE:
+ SEE LANDSCAPE PLANS FOR LAYOUT AND PLANT MATERIAL SELECTIONS.

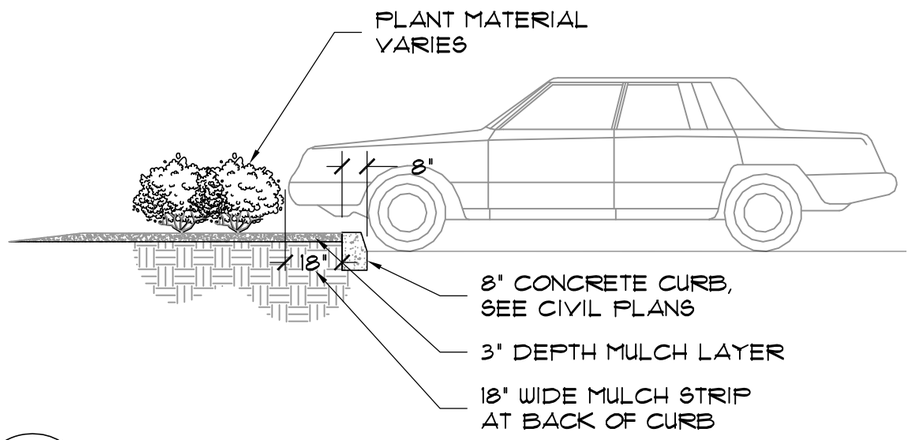

1
L20.707

TYPICAL PARKING MULCH STRIP

SCALE: 1"=4'-0" SECTION

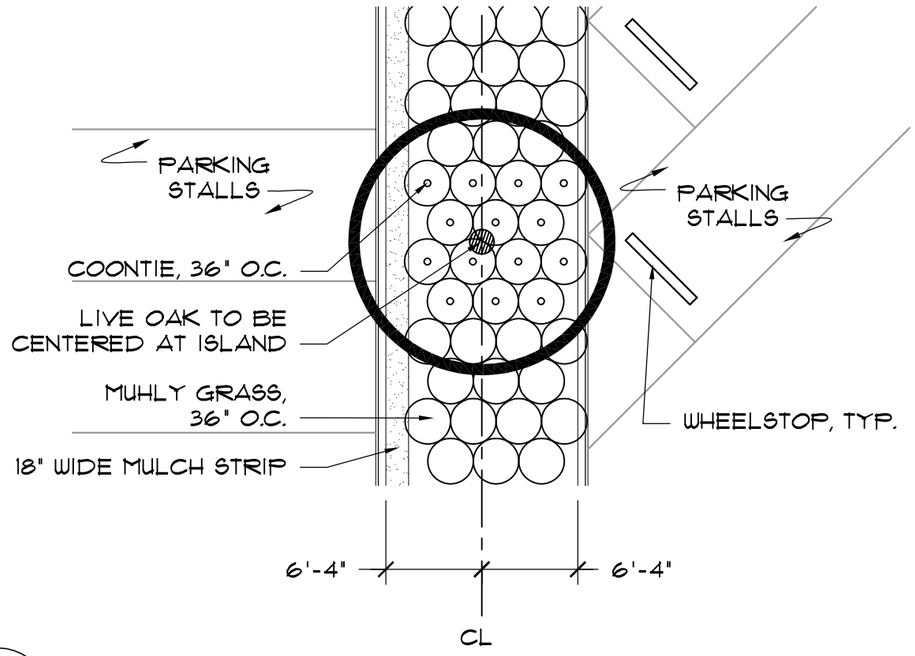

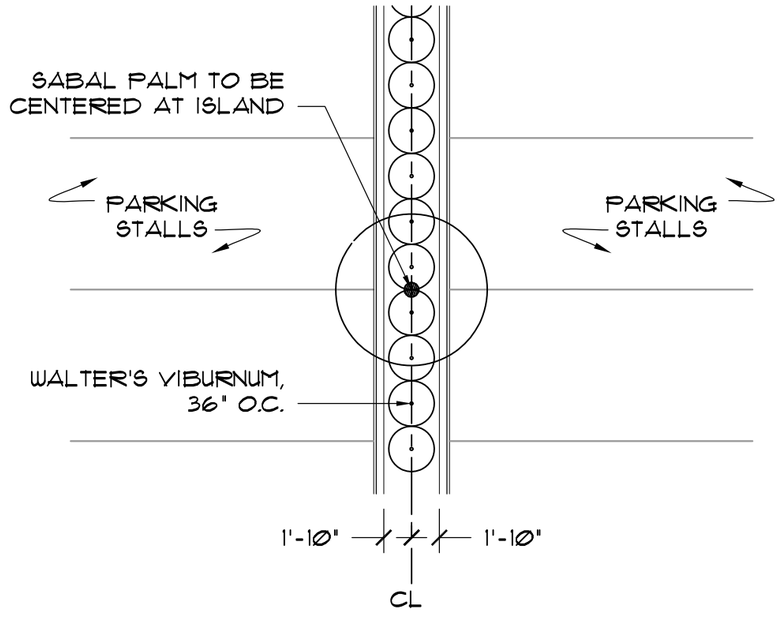

2
L20.707

TYPICAL MEDIAN LANDSCAPE

SCALE: 1"=10'-0" PLAN

REVISIONS					
DATE	BY	DESCRIPTION	DATE	BY	DESCRIPTION

Christina E. Hite, RLA #1340
DIX.HITE + PARTNERS
150 W. JESSUP AVENUE
LONGWOOD, FLORIDA
TEL 407.667.1777
FAX 407.667.1779
Certificate of Authorization No. LC0000358

STATE OF FLORIDA
DEPARTMENT OF TRANSPORTATION

ROAD NO.	COUNTY	FINANCIAL PROJECT ID
CFRC P2S	OSCEOLA	423446-9-52-01

CENTRAL FLORIDA COMMUTER RAIL TRANSIT (CFCRT) PHASE 2 SOUTH

TYPICAL LANDSCAPE DETAILS OSCEOLA PARKWAY STATION

SHEET NO. 116

NOTICE: THE OFFICIAL RECORD OF THIS SHEET IS THE ELECTRONIC FILE SIGNED AND SEALED UNDER RULE 61G10-11.011, F.A.C.

DRAWING NO.
L20.708

NOTE:
+ SEE LANDSCAPE PLANS FOR LAYOUT AND PLANT MATERIAL SELECTIONS.

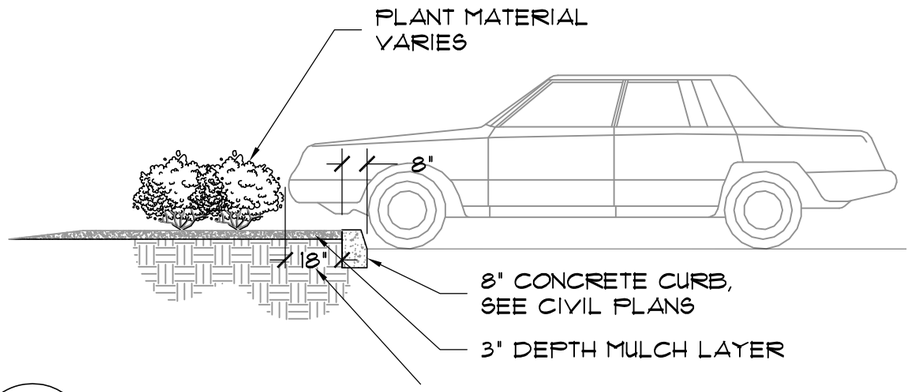

1 / L20.708 **TYPICAL PARKING MULCH STRIP**
SCALE: 1"=4'-0" SECTION

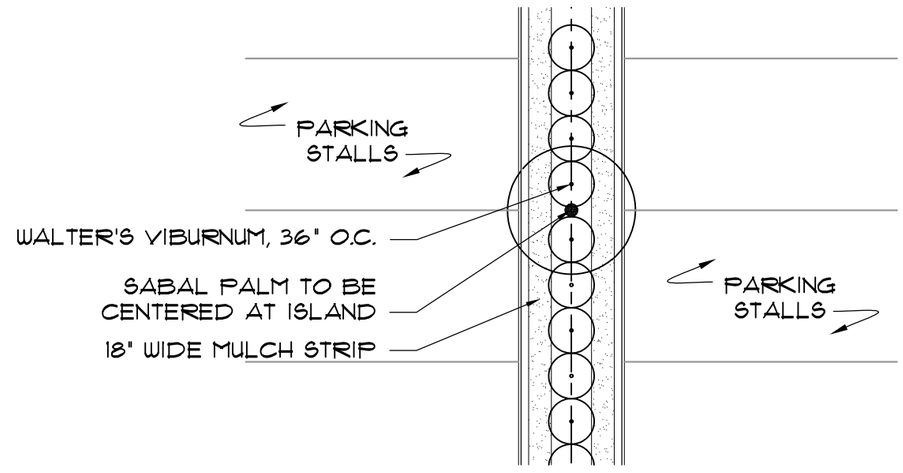

2 / L20.708 **TYPICAL MEDIAN LANDSCAPE**
SCALE: 1"=10'-0" PLAN

NOTICE: THE OFFICIAL RECORD OF THIS SHEET IS THE ELECTRONIC FILE SIGNED AND SEALED UNDER RULE 61G10-11.011, F.A.C.

REVISIONS					
DATE	BY	DESCRIPTION	DATE	BY	DESCRIPTION

Christina E. Hite, RLA #1340
DIX.HITE + PARTNERS
150 W. JESSUP AVENUE
LONGWOOD, FLORIDA
TEL 407.667.1777
FAX 407.667.1779
Certificate of Authorization No. LC0000358

STATE OF FLORIDA
DEPARTMENT OF TRANSPORTATION

ROAD NO.	COUNTY	FINANCIAL PROJECT ID
CFRC P2S	OSCEOLA	423446-9-52-01

CENTRAL FLORIDA COMMUTER RAIL TRANSIT (CFCRT) PHASE 2 SOUTH

TYPICAL LANDSCAPE DETAILS KISSIMMEE STATION

SHEET NO. 117

DRAWING NO.
L20.709

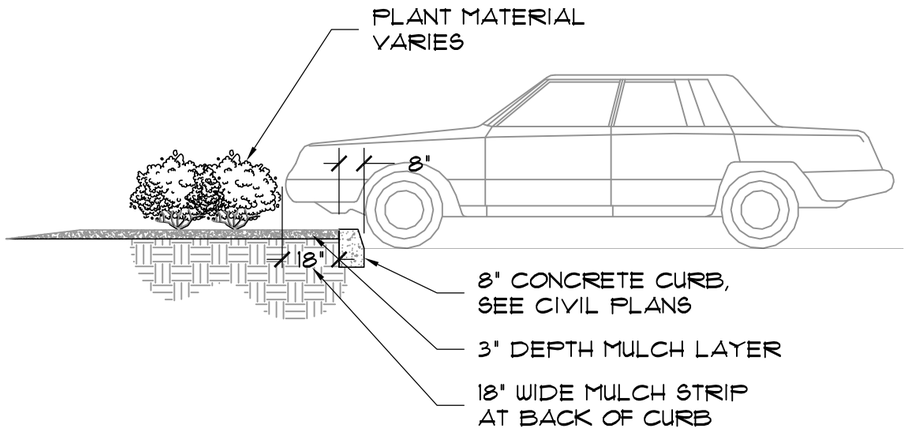

1 / L20.709 **TYPICAL PARKING MULCH STRIP**
SCALE: 1"=4'-0" SECTION

NOTE:
+ SEE LANDSCAPE PLANS FOR LAYOUT AND PLANT MATERIAL SELECTIONS.

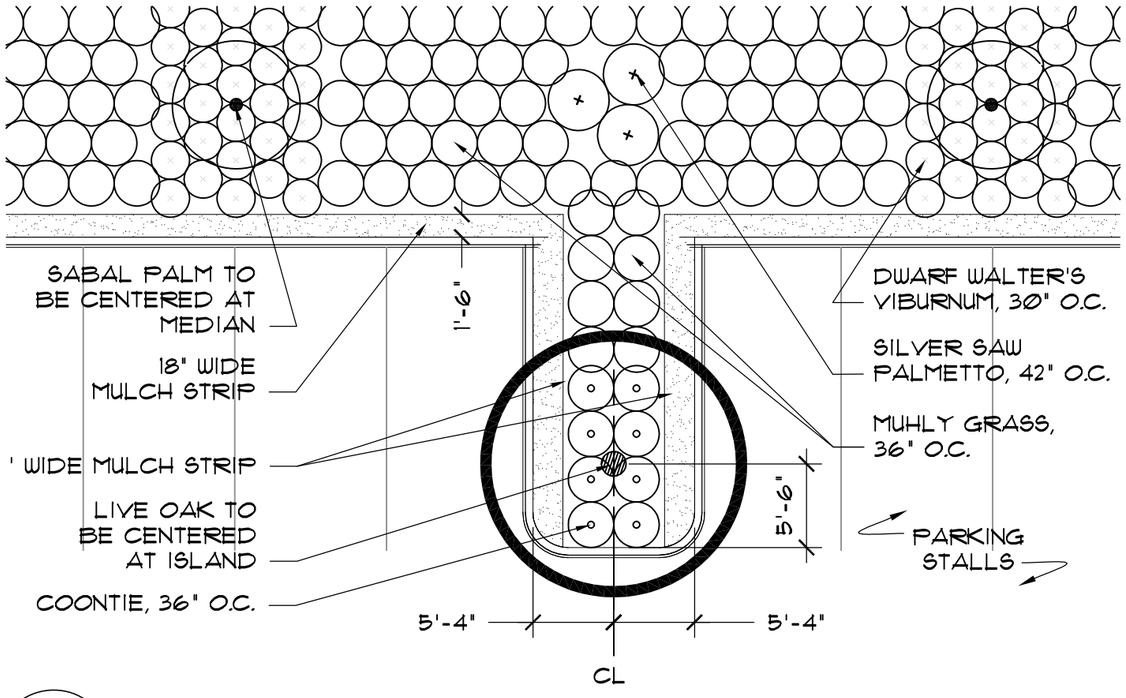

2 / L20.709 **TYPICAL CANOPY ISLAND AT PERIMETER**
SCALE: 1"=10'-0" PLAN

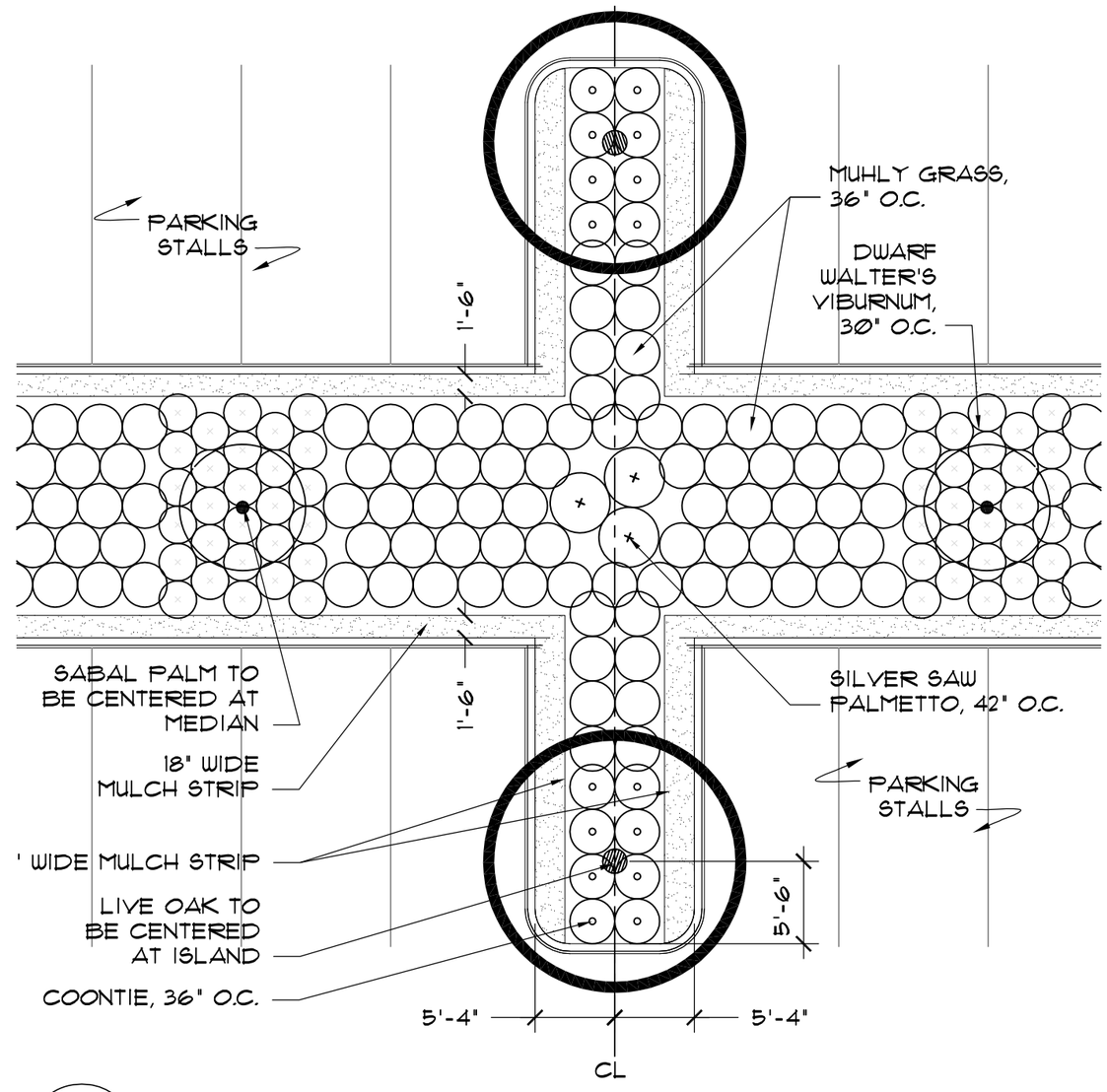

3 / L20.709 **TYPICAL CANOPY ISLAND AT MEDIAN**
SCALE: 1"=10'-0" PLAN

NOTICE: THE OFFICIAL RECORD OF THIS SHEET IS THE ELECTRONIC FILE SIGNED AND SEALED UNDER RULE 61G10-11.011, F.A.C.

REVISIONS					
DATE	BY	DESCRIPTION	DATE	BY	DESCRIPTION

Christina E. Hite, RLA #1340
DIX.HITE + PARTNERS
150 W. JESSUP AVENUE
LONGWOOD, FLORIDA
TEL 407.667.1777
FAX 407.667.1779
Certificate of Authorization No. LC0000358

STATE OF FLORIDA
DEPARTMENT OF TRANSPORTATION

ROAD NO.	COUNTY	FINANCIAL PROJECT ID
CFRC P2S	OSCEOLA	423446-9-52-01

CENTRAL FLORIDA COMMUTER RAIL TRANSIT (CFCRT) PHASE 2 SOUTH

TYPICAL LANDSCAPE DETAILS POINCIANA STATION

SHEET NO. 118

DRAWING NO.
L20.710

NOTE:
+ SEE LANDSCAPE PLANS FOR LAYOUT AND PLANT MATERIAL SELECTIONS.

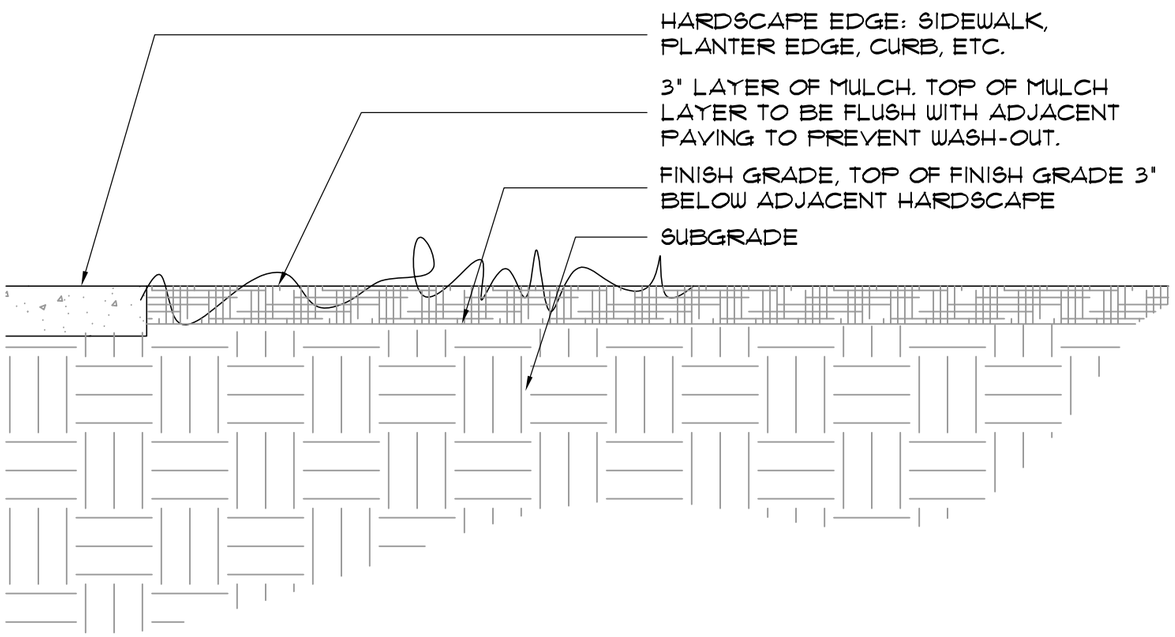

1
L20.710

HARDSCAPE/LANDSCAPE AREA INTERACTION (MEADOW WOODS, OSCEOLA, KISSIMMEE, POINCIANA)

SCALE: 1"=1'-0" SECTION

NOTICE: THE OFFICIAL RECORD OF THIS SHEET IS THE ELECTRONIC FILE SIGNED AND SEALED UNDER RULE 61G10-11.011, F.A.C.

REVISIONS					
DATE	BY	DESCRIPTION	DATE	BY	DESCRIPTION

Christina E. Hite, RLA #1340
DIX.HITE + PARTNERS
150 W. JESSUP AVENUE
LONGWOOD, FLORIDA
TEL 407.667.1777
FAX 407.667.1779
Certificate of Authorization No. LC0000358

STATE OF FLORIDA
DEPARTMENT OF TRANSPORTATION

ROAD NO.	COUNTY	FINANCIAL PROJECT ID
CFRC P2S	VARIOUS	423446-9-52-01

CENTRAL FLORIDA COMMUTER RAIL TRANSIT (CFCRT) PHASE 2 SOUTH

TYPICAL LANDSCAPE DETAILS

SHEET NO. 119

DRAWING NO.
A20.301

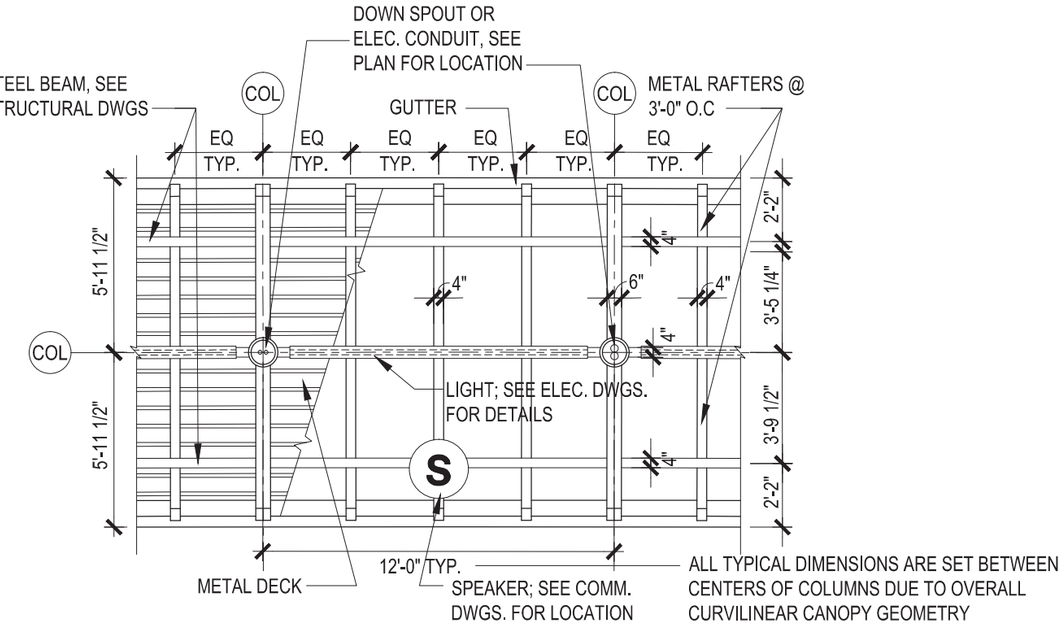

3 A20.301 ENLARGED REFLECTED CEILING PLAN - CANOPY F

SCALE 3/16" = 1'-0"

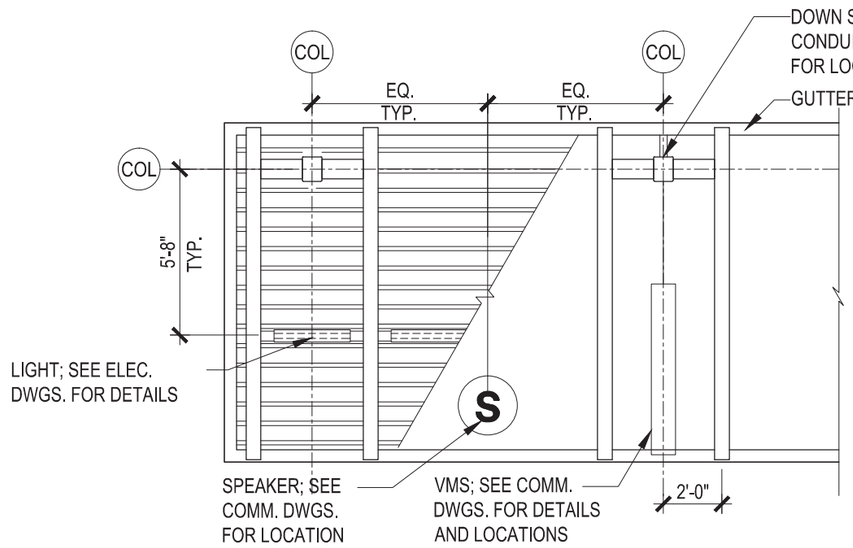

4 A20.301 ENLARGED REFLECTED CEILING PLAN - CANOPY A

SCALE 3/16" = 1'-0"

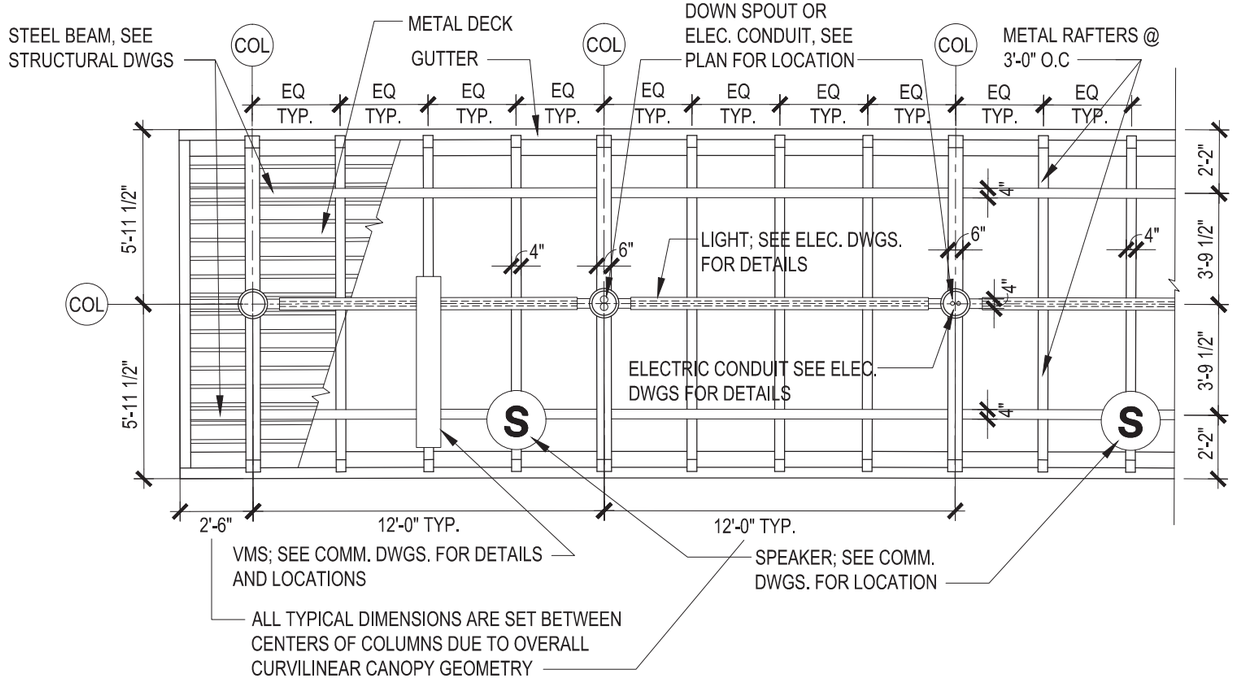

1 A20.301 ENLARGED REFLECTED CEILING PLAN - CANOPY F

SCALE 3/16" = 1'-0"

NOTICE: THE OFFICIAL RECORD OF THIS SHEET IS THE ELECTRONIC FILE SIGNED AND SEALED UNDER RULE 61G1-16.005, F.A.C.

REVISIONS					
DATE	BY	DESCRIPTION	DATE	BY	DESCRIPTION

MICHEAL K. CHATHAM, AIA FLORIDA AR 13635

HELMAN HURLEY CHARVAT PEACOCK / ARCHITECTS, INC.

120 North Orange Ave Orlando, FL 32801
P: 407 644 2656 F: 407 628 3269 www.HHCP.com

STATE OF FLORIDA
DEPARTMENT OF TRANSPORTATION

ROAD NO.	COUNTY	FINANCIAL PROJECT ID
CFRC P2S	VARIOUS	423446-9-52-01

CENTRAL FLORIDA COMMUTER RAIL TRANSIT (CFCRT) PHASE 2 SOUTH

TYPICAL ENLARGED CANOPY REFLECTED CEILING PLANS

SHEET NO. 120

DRAWING NO.
A20.401

KEY NOTES

1. 3/4" CONDENSATE RECEPTOR CONDUIT TO DRYWELL, SEE PLUMBING DRAWINGS
2. POWER & COMMUNICATION CONDUIT, SEE ELECTRICAL & COMMUNICATION DRAWINGS

LEGEND

1. DIRECTIONAL BROOM FINISH CONCRETE (SEE ENLARGED DETAIL FOR DIRECTIONAL FINISH
2. BENCH SIZE, REFER TO SCHEDULE
3. REF: 4 / A20.416 FOR TYP. DRAINAGE, SLOPE & RECESS FOR PAVERS
4. 45 DEGREE HERRINGBONE PAVER PATTERN
5. STACK BOND
6. NOT USED
7. DIRECTORY SIGN ON CAST-IN-PLACE PEDESTAL

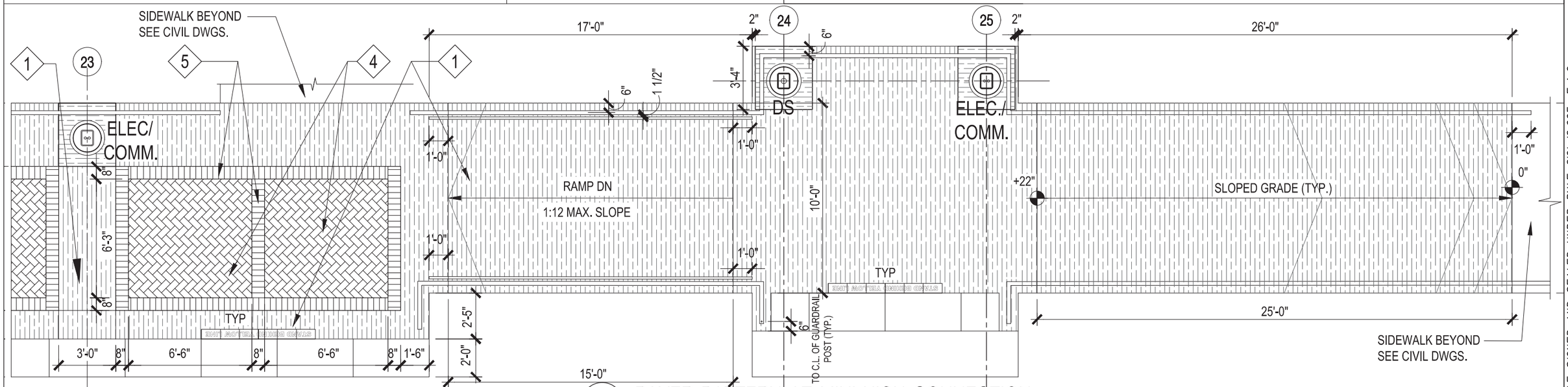

4 / A20.401 PAVER PATTERN AT MINI-HIGH CONNECTION
SCALE 3/16" = 1'-0"
(TYPE 'A' CANOPY RAMP TO MINI-HIGH, TYP.)

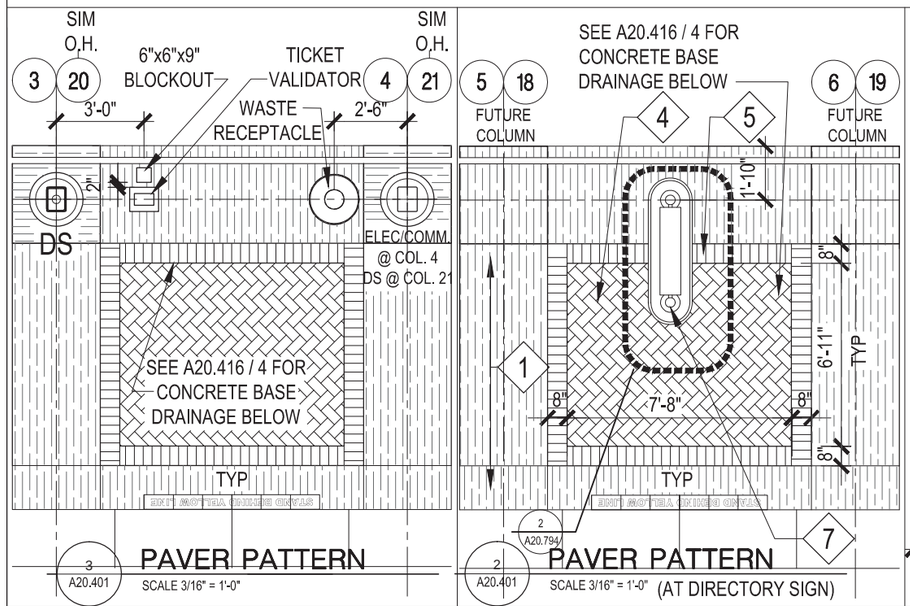

3 / A20.401 PAVER PATTERN
SCALE 3/16" = 1'-0"

2 / A20.401 PAVER PATTERN (AT DIRECTORY SIGN)
SCALE 3/16" = 1'-0"

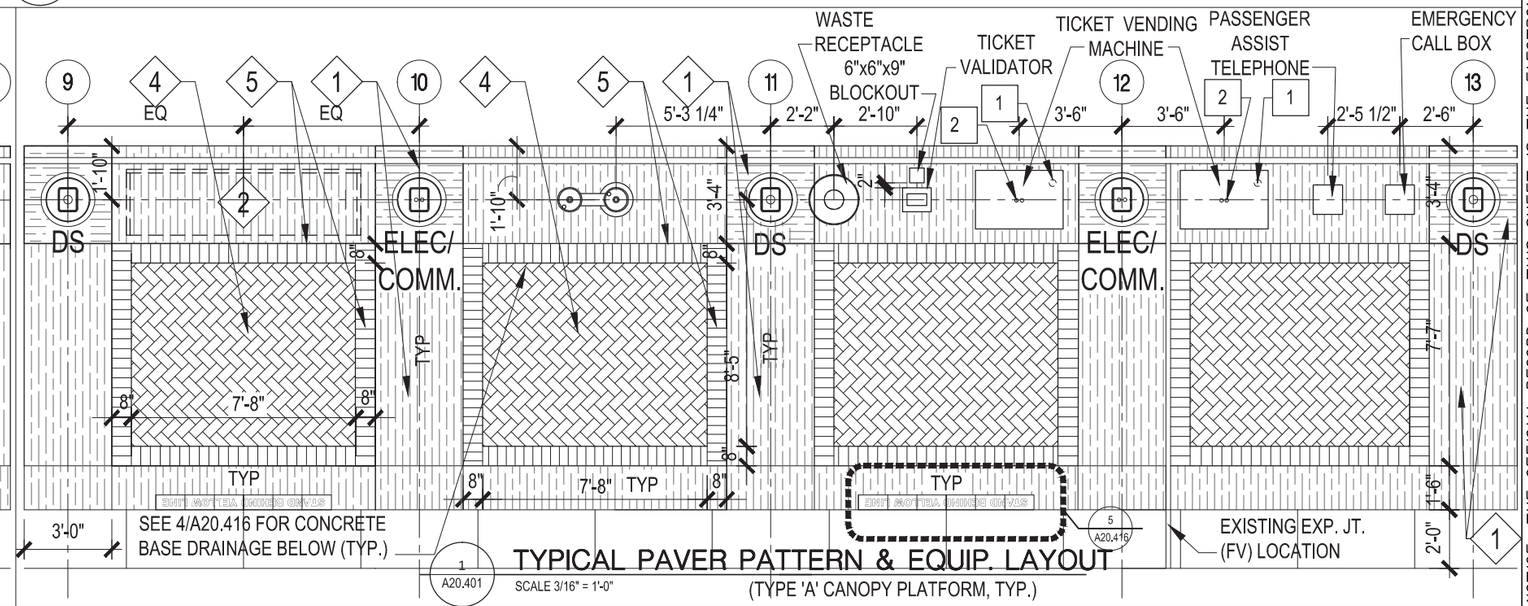

1 / A20.401 TYPICAL PAVER PATTERN & EQUIP. LAYOUT
SCALE 3/16" = 1'-0"
(TYPE 'A' CANOPY PLATFORM, TYP.)

NOTICE: THE OFFICIAL RECORD OF THIS SHEET IS THE ELECTRONIC FILE SIGNED AND SEALED UNDER RULE 61G1-16.005, F.A.C.

REVISIONS

DATE	BY	DESCRIPTION	DATE	BY	DESCRIPTION

MICHEAL K. CHATHAM, AIA FLORIDA AR 13635

HELMAN HURLEY CHARVAT PEACOCK / ARCHITECTS, INC.

120 North Orange Ave Orlando, FL 32801
P: 407 644 2656 F: 407 628 3269 www.HHCP.com

STATE OF FLORIDA
DEPARTMENT OF TRANSPORTATION

ROAD NO.	COUNTY	FINANCIAL PROJECT ID
CFRC P2S	VARIOUS	423446-9-52-01

CENTRAL FLORIDA COMMUTER RAIL TRANSIT (CFCRT) PHASE 2 SOUTH

TYPICAL PAVER PATTERN PLAN

SHEET NO. 121

DRAWING NO.
A20.415

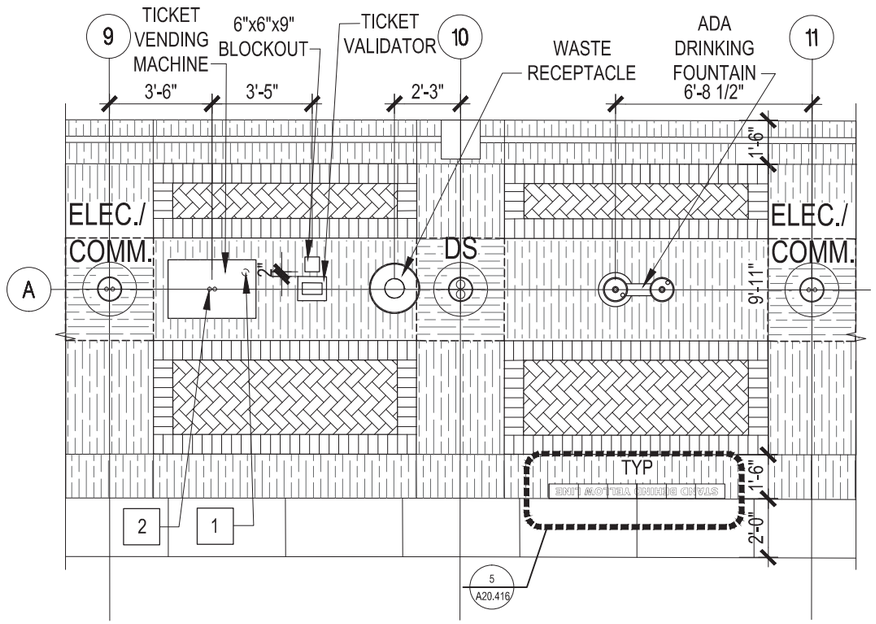

4 A20.415 PAVER PATTERN & EQUIP LAYOUT (KISSIMMEE)
SCALE 3/16" = 1'-0"

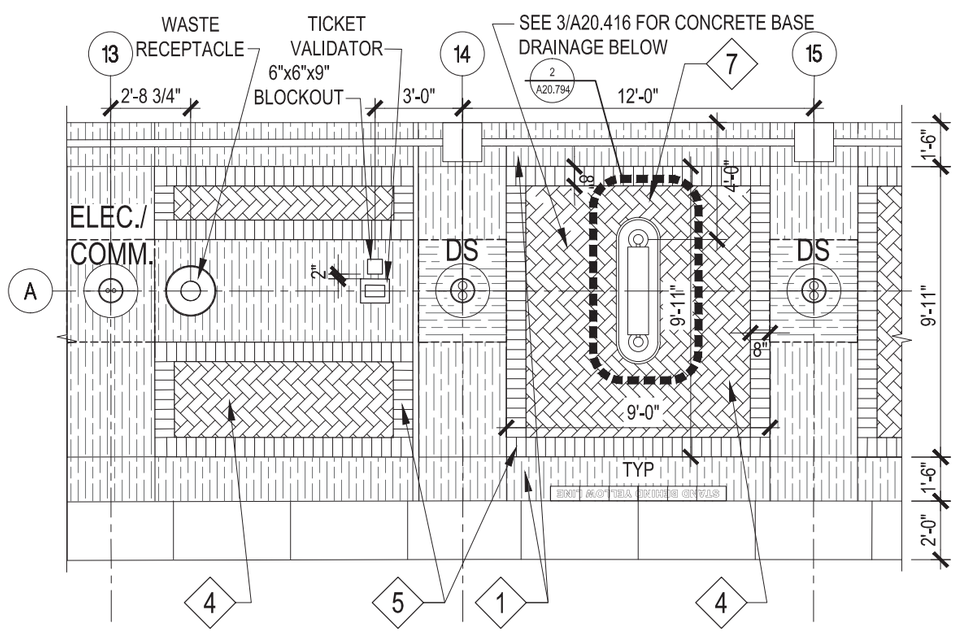

3 A20.415 PAVER PATTERN & EQUIP. LAYOUT (KISSIMMEE)
SCALE 3/16" = 1'-0"

LEGEND

1. DIRECTIONAL BROOM FINISHED CONCRETE
2. BENCH SIZE, REFER TO SCHEDULE
3. NOT USED
4. 45 DEGREE HERRINGBONE PAVER PATTERN
5. STACK BOND
6. NOT USED
7. DIRECTORY SIGN ON CAST-IN-PLACE PEDESTAL

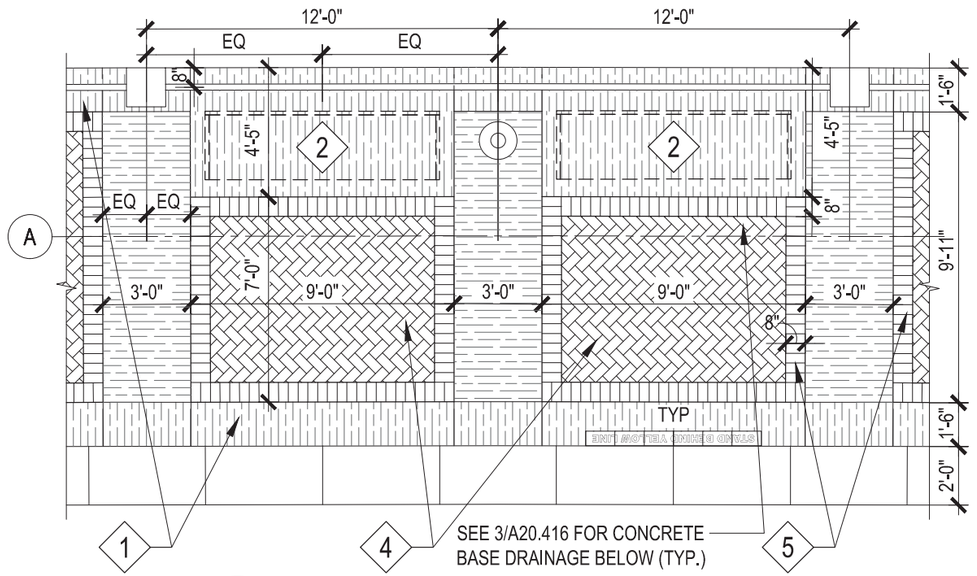

2 A20.415 PAVER PATTER AT BENCHES (KISSIMMEE)
SCALE 3/16" = 1'-0"

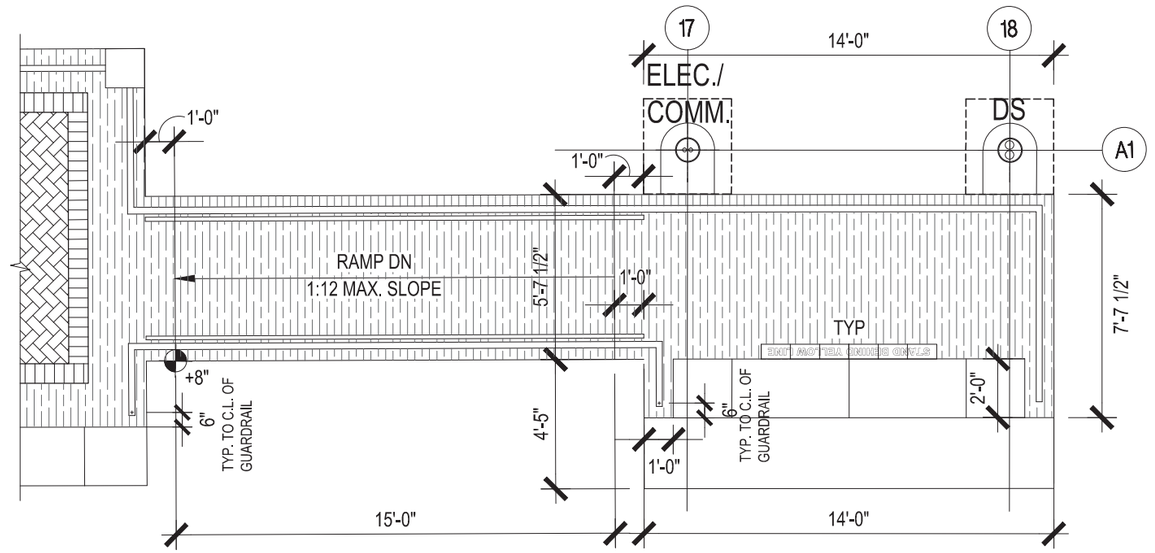

1 A20.415 MINI HIGH RAMP DETAIL (KISSIMMEE)
SCALE 3/16" = 1'-0"

NOTICE: THE OFFICIAL RECORD OF THIS SHEET IS THE ELECTRONIC FILE SIGNED AND SEALED UNDER RULE 61G1-16.005, F.A.C.

REVISIONS					
DATE	BY	DESCRIPTION	DATE	BY	DESCRIPTION

MICHEAL K. CHATHAM, AIA FLORIDA AR 13635

HELMAN HURLEY CHARVAT PEACOCK / ARCHITECTS, INC.

120 North Orange Ave Orlando, FL 32801
P: 407 644 2656 F: 407 628 3269 www.HHCP.com

STATE OF FLORIDA
DEPARTMENT OF TRANSPORTATION

ROAD NO.	COUNTY	FINANCIAL PROJECT ID
CFRC P2S	OSCEOLA	423446-9-52-01

CENTRAL FLORIDA COMMUTER RAIL TRANSIT (CFCRT) PHASE 2, SOUTH

PAVER PATTERN PLAN & CONCRETE BASE PLAN BENEATH

SHEET NO. 122

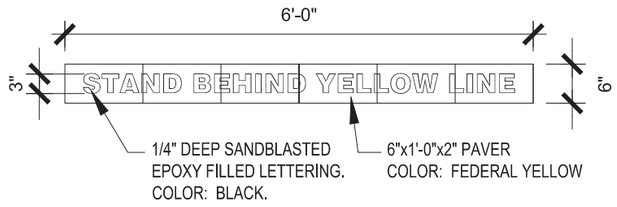

6 A20.416 **WARNING STRIPE**
SCALE 1/2" = 1'-0" (TYP. AT ALL STATIONS)

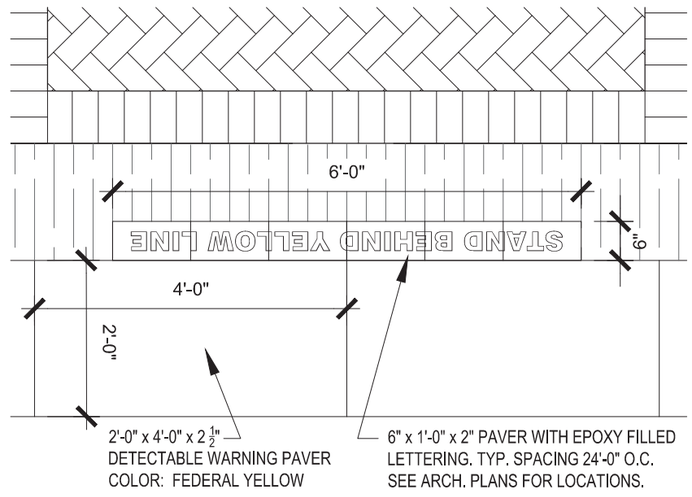

5 A20.416 **WARNING STRIPE**
SCALE 1/2" = 1'-0" (TYP. AT ALL STATIONS)

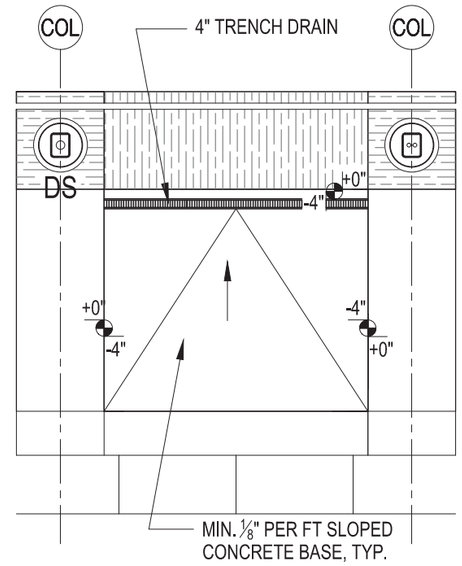

4 A20.416 **CONCRETE BASE BELOW PAVER**
SCALE 3/16" = 1'-0"
(MEADOW WOODS, OSCEOLA PKWY POINCIANA - TYP.)

LEGEND

1. DIRECTIONAL BROOM FINISHED CONCRETE
2. BENCH SIZE, REFER TO SCHEDULE
3. NOT USED
4. 45 DEGREE HERRINGBONE PAVER PATTERN
5. STACK BOND
6. NOT USED
7. NOT USED

KEY NOTES

1. 3/4" CONDENSATE RECEPTOR CONDUIT TO DRYWELL, SEE PLUMBING DRAWINGS
2. POWER & COMMUNICATION CONDUIT, SEE ELECTRICAL & COMMUNICATION DRAWINGS

DRAWING NO. A20.416

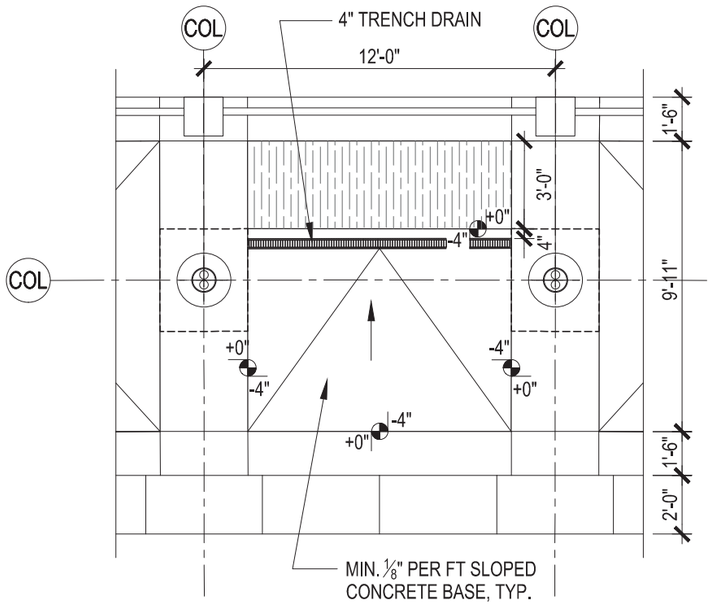

3 A20.416 **CONCRETE BASE BELOW PAVER**
SCALE 3/16" = 1'-0" (KISSIMMEE - TYP.)

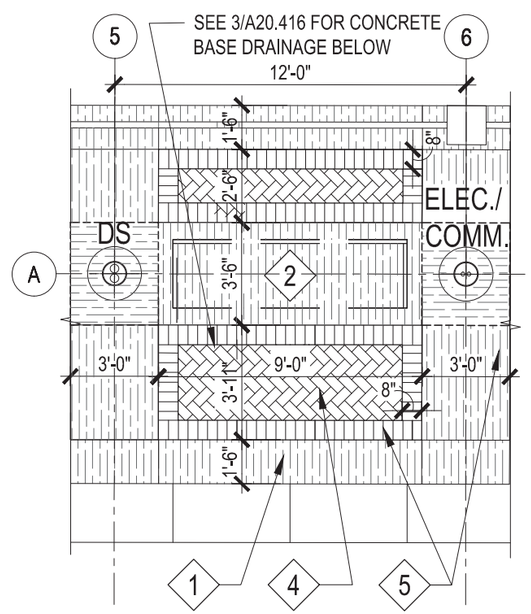

2 A20.416 **PAVER PATTERN AT BENCHES**
SCALE 3/16" = 1'-0" (KISSIMMEE)

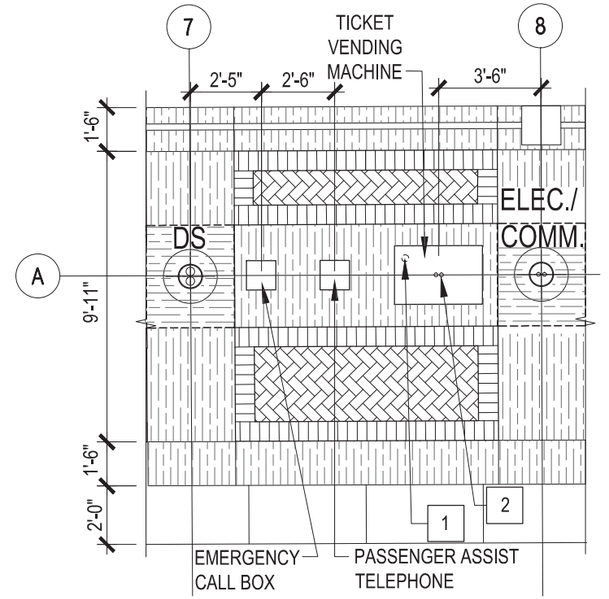

1 A20.416 **PAVER PATTERN & EQUIP. LAYOUT**
SCALE 3/16" = 1'-0" (KISSIMMEE)

NOTICE: THE OFFICIAL RECORD OF THIS SHEET IS THE ELECTRONIC FILE SIGNED AND SEALED UNDER RULE 61G1-16.005, F.A.C.

REVISIONS

DATE	BY	DESCRIPTION	DATE	BY	DESCRIPTION

MICHEAL K. CHATHAM, AIA FLORIDA AR 13635
HELMAN HURLEY CHARVAT PEACOCK / ARCHITECTS, INC.
120 North Orange Ave Orlando, FL 32801
P: 407 644 2656 F: 407 628 3269 www.HHCP.com

STATE OF FLORIDA
DEPARTMENT OF TRANSPORTATION

ROAD NO.	COUNTY	FINANCIAL PROJECT ID
CFRC P2S	VARIOUS	423446-9-52-01

CENTRAL FLORIDA COMMUTER RAIL TRANSIT (CFCRT) PHASE 2 SOUTH

PAVER PATTERN PLAN & EQUIPMENT LAYOUT

SHEET NO. 123

DRAWING NO.
A20.501

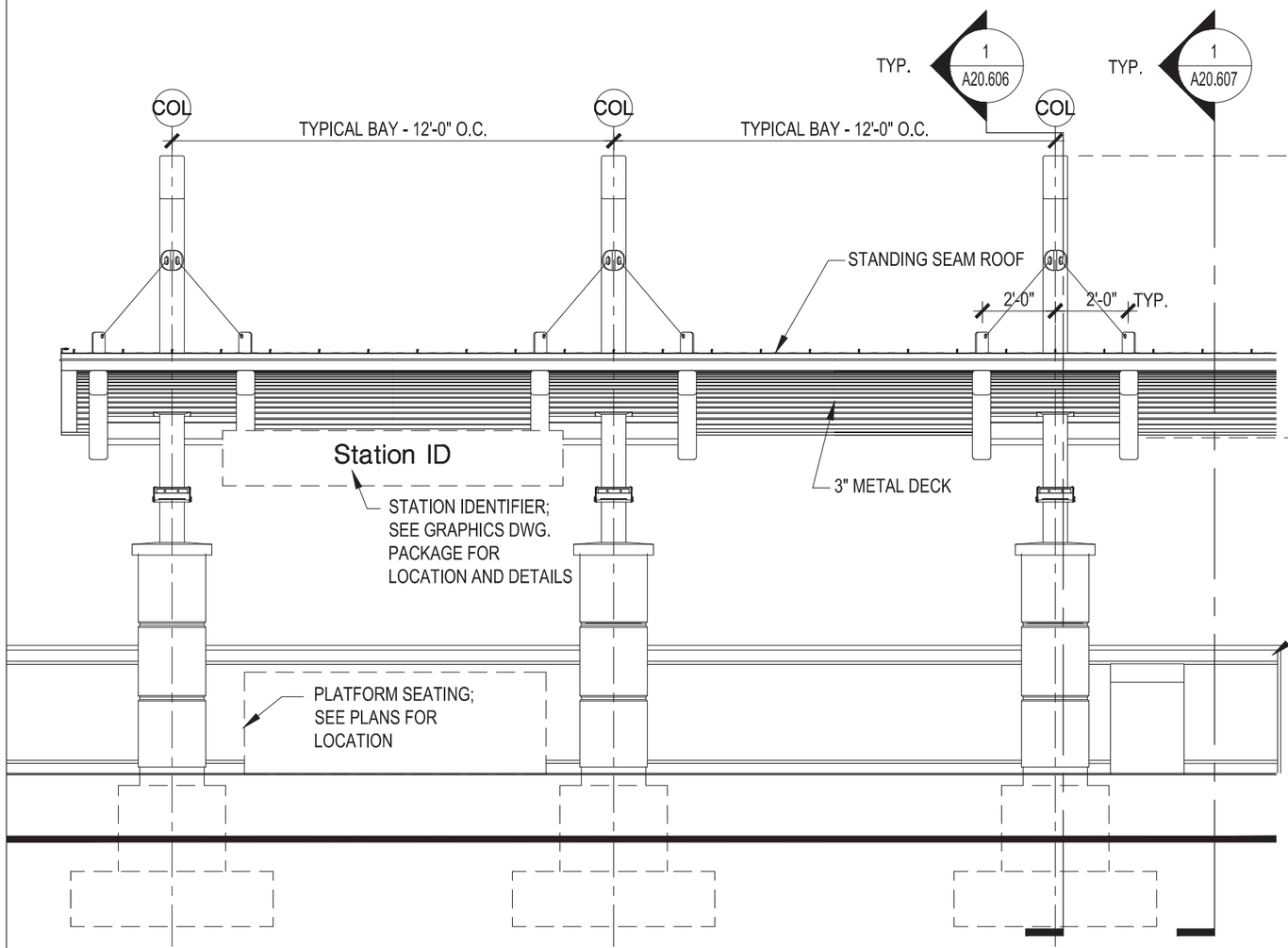

2 / A20.501 CANOPY TYPE "A" - EAST PLATFORM TRACK-SIDE ELEVATION

SCALE 1/4" = 1'-0"

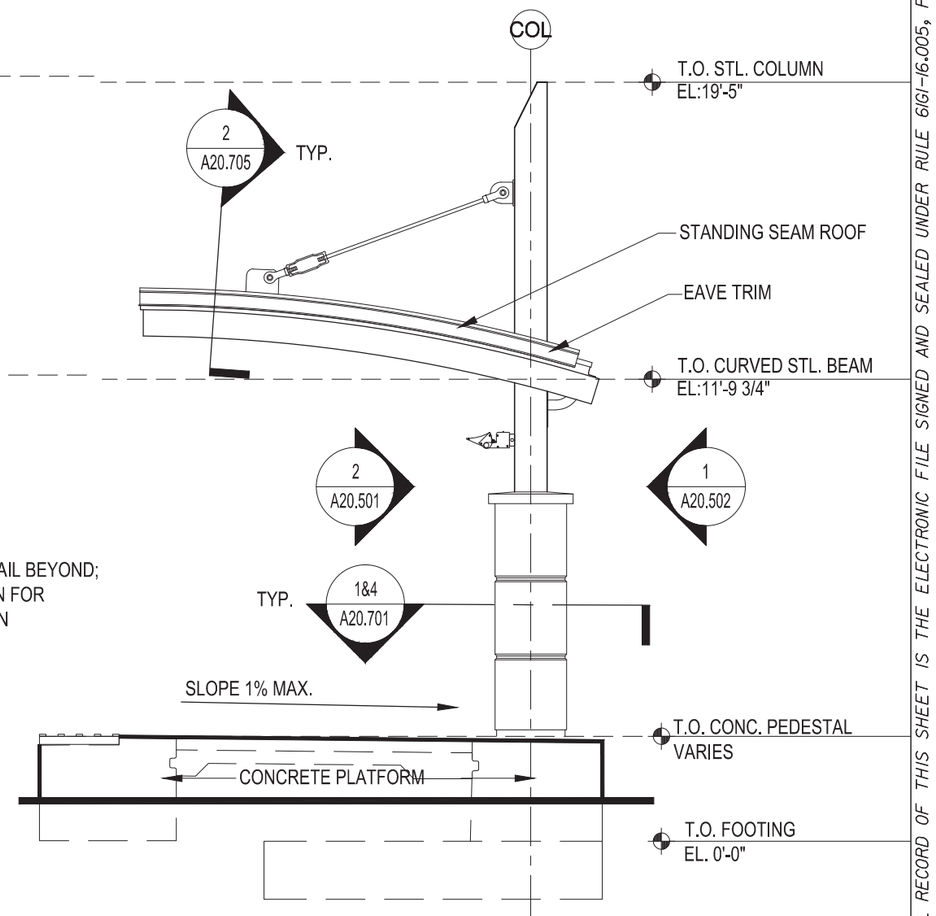

1 / A20.501 CANOPY TYPE "A" - EAST PLATFORM SIDE ELEVATION

SCALE 1/4" = 1'-0"

REVISIONS					
DATE	BY	DESCRIPTION	DATE	BY	DESCRIPTION

MICHEAL K. CHATHAM, AIA FLORIDA AR 13635

HELMAN HURLEY CHARVAT PEACOCK / ARCHITECTS, INC.

120 North Orange Ave Orlando, FL 32801
P: 407 644 2656 F: 407 628 3269 www.HHCP.com
AR [redacted]

STATE OF FLORIDA
DEPARTMENT OF TRANSPORTATION

ROAD NO.	COUNTY	FINANCIAL PROJECT ID
CFRC P2S	VARIOUS	423446-9-52-01

CENTRAL FLORIDA COMMUTER RAIL TRANSIT (CFCRT) PHASE 2 SOUTH

CANOPY A ENLARGED ELEVATIONS

SHEET NO. 124

NOTICE: THE OFFICIAL RECORD OF THIS SHEET IS THE ELECTRONIC FILE SIGNED AND SEALED UNDER RULE 61G1-16.005, F.A.C.

DRAWING NO.
A20.502

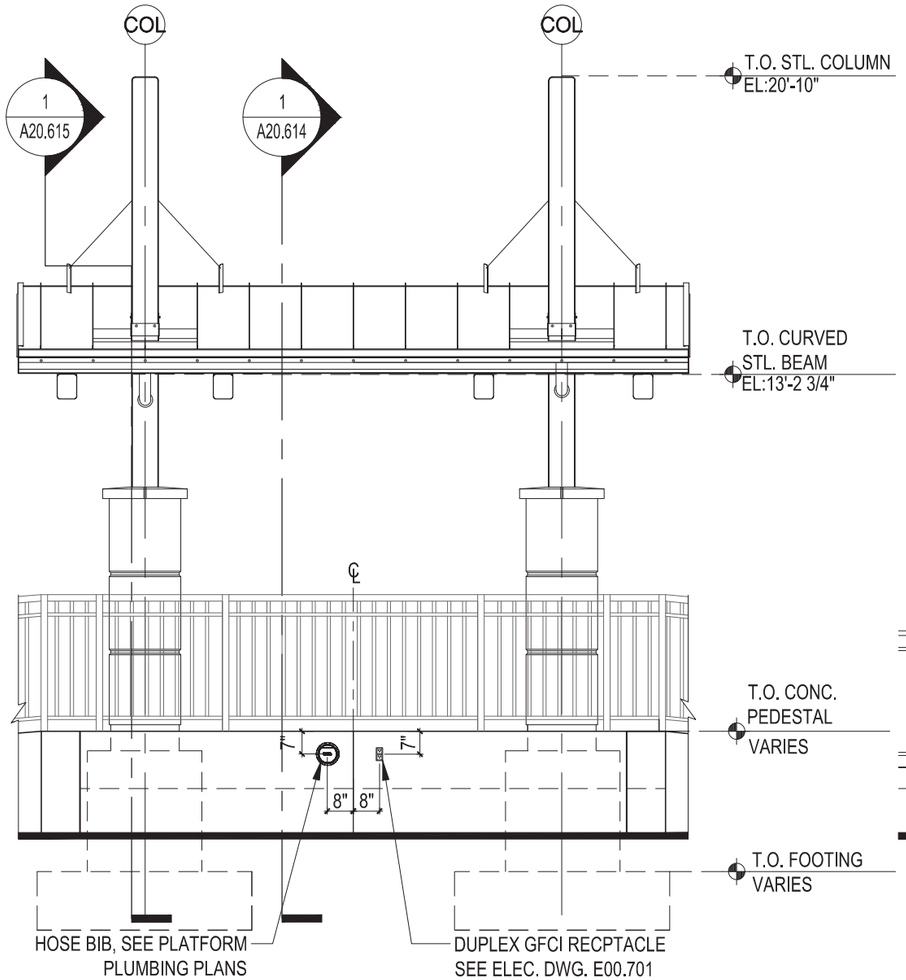

2 A20.502 CANOPY TYPE "A" WEST PLATFORM - BACK OF MINI-HIGH
SCALE 1/4" = 1'-0"

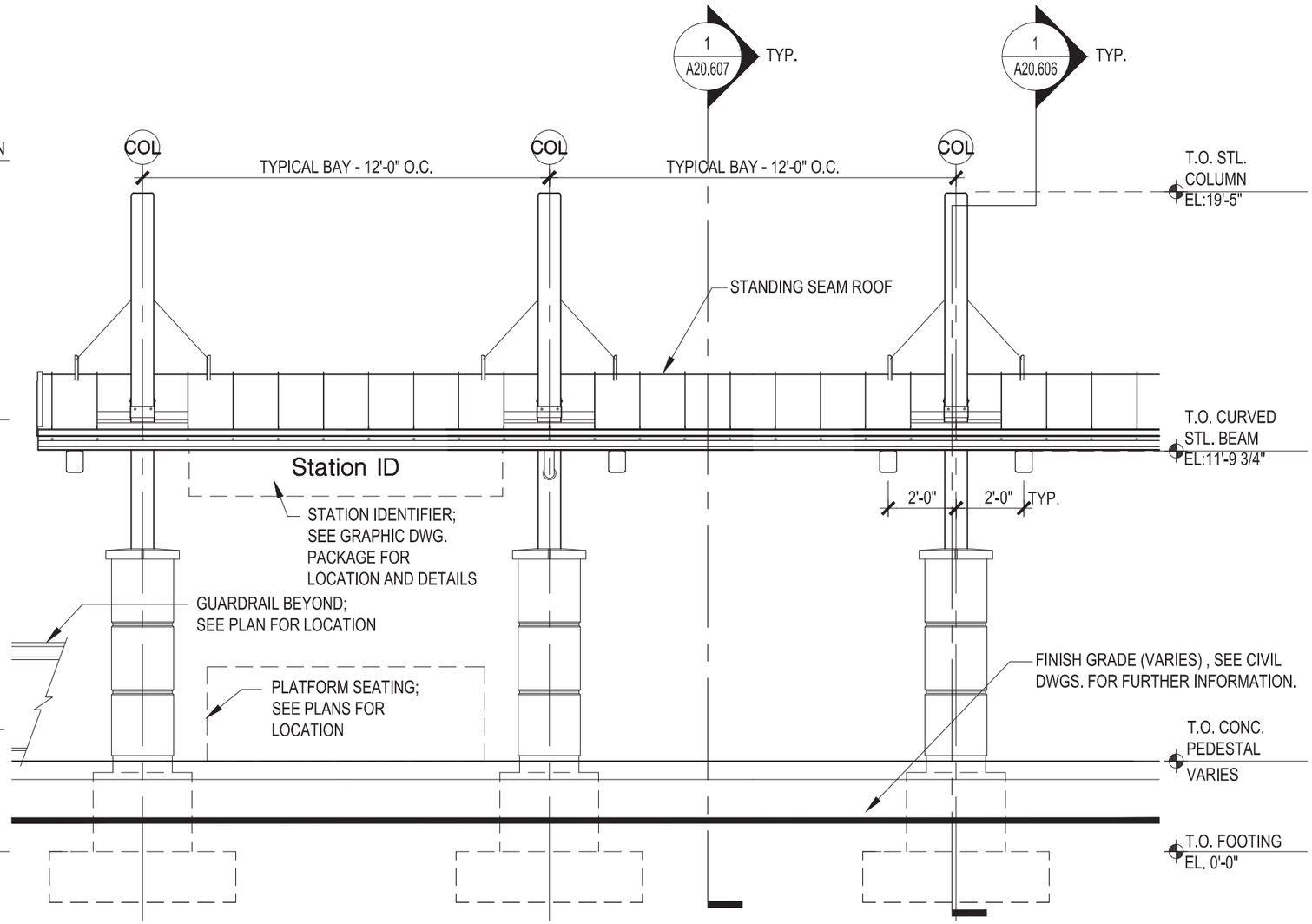

1 A20.502 CANOPY TYPE "A" WEST PLATFORM - BACK OF PLATFORM
SCALE 1/4" = 1'-0"

NOTICE: THE OFFICIAL RECORD OF THIS SHEET IS THE ELECTRONIC FILE SIGNED AND SEALED UNDER RULE 61G1-16.005, F.A.C.

REVISIONS					
DATE	BY	DESCRIPTION	DATE	BY	DESCRIPTION

MICHEAL K. CHATHAM, AIA FLORIDA AR 13635

HELMAN HURLEY CHARVAT PEACOCK / ARCHITECTS, INC.

120 North Orange Ave Orlando, FL 32801
P: 407 644 2656 F: 407 628 3269 www.HHCP.com
AA C000336

STATE OF FLORIDA
DEPARTMENT OF TRANSPORTATION

ROAD NO.	COUNTY	FINANCIAL PROJECT ID
CFRC P2S	VARIOUS	423446-9-52-01

CENTRAL FLORIDA COMMUTER RAIL TRANSIT (CFCRT) PHASE 2, SOUTH

CANOPY A
ENLARGED ELEVATIONS

SHEET NO. 125

DRAWING NO.
A20.571

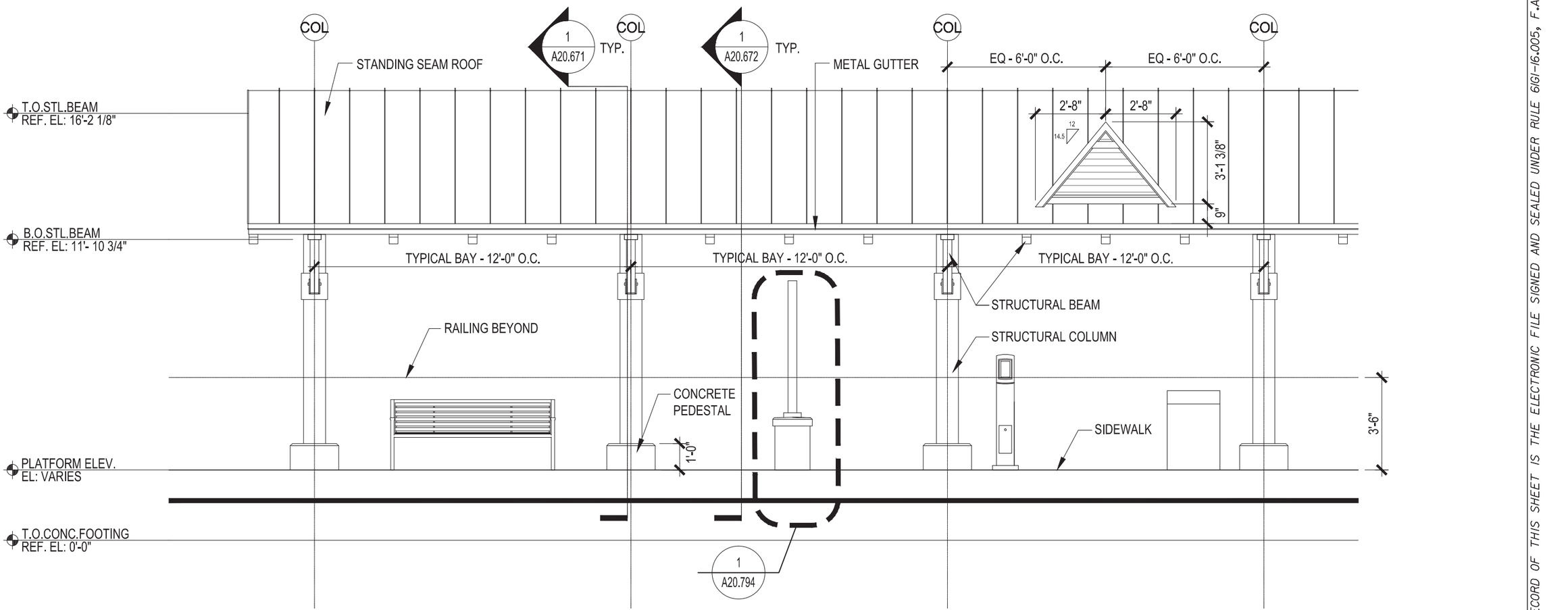

1 / A20.571 CANOPY TYPE "F" - KISSIMMEE PLATFORM CROSS ELEVATION - END CONDITION

SCALE 1/4" = 1'-0"

NOTICE: THE OFFICIAL RECORD OF THIS SHEET IS THE ELECTRONIC FILE SIGNED AND SEALED UNDER RULE 61G1-16.005, F.A.C.

REVISIONS					
DATE	BY	DESCRIPTION	DATE	BY	DESCRIPTION

MICHEAL K. CHATHAM, AIA FLORIDA AR 13635

HELMAN HURLEY CHARVAT PEACOCK / ARCHITECTS, INC.

120 North Orange Ave Orlando, FL 32801
P: 407 644 2656 F: 407 628 3269 www.HHCP.com
AA C000548

STATE OF FLORIDA
DEPARTMENT OF TRANSPORTATION

ROAD NO.	COUNTY	FINANCIAL PROJECT ID
CFRC P2S	OSCEOLA	423446-9-52-01

CENTRAL FLORIDA COMMUTER RAIL TRANSIT (CFCRT) PHASE 2, SOUTH

CANOPY F
ENLARGED ELEVATIONS

SHEET NO. 126

DRAWING NO.
A20.572

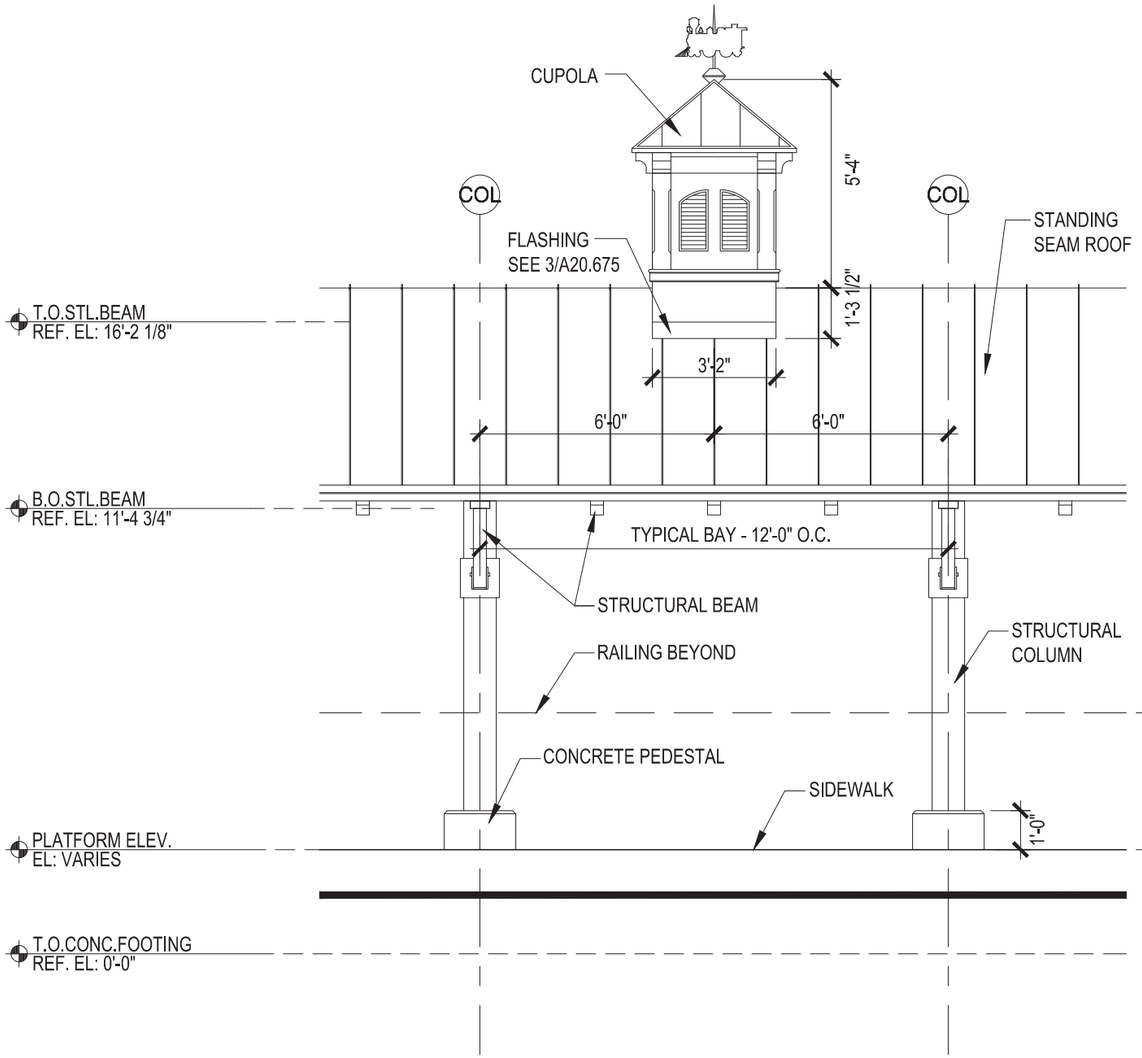

2 / A20.572 CANOPY TYPE "F" - KISSIMMEE PLATFORM ELEVATION - CUPOLA
SCALE 1/4" = 1'-0"

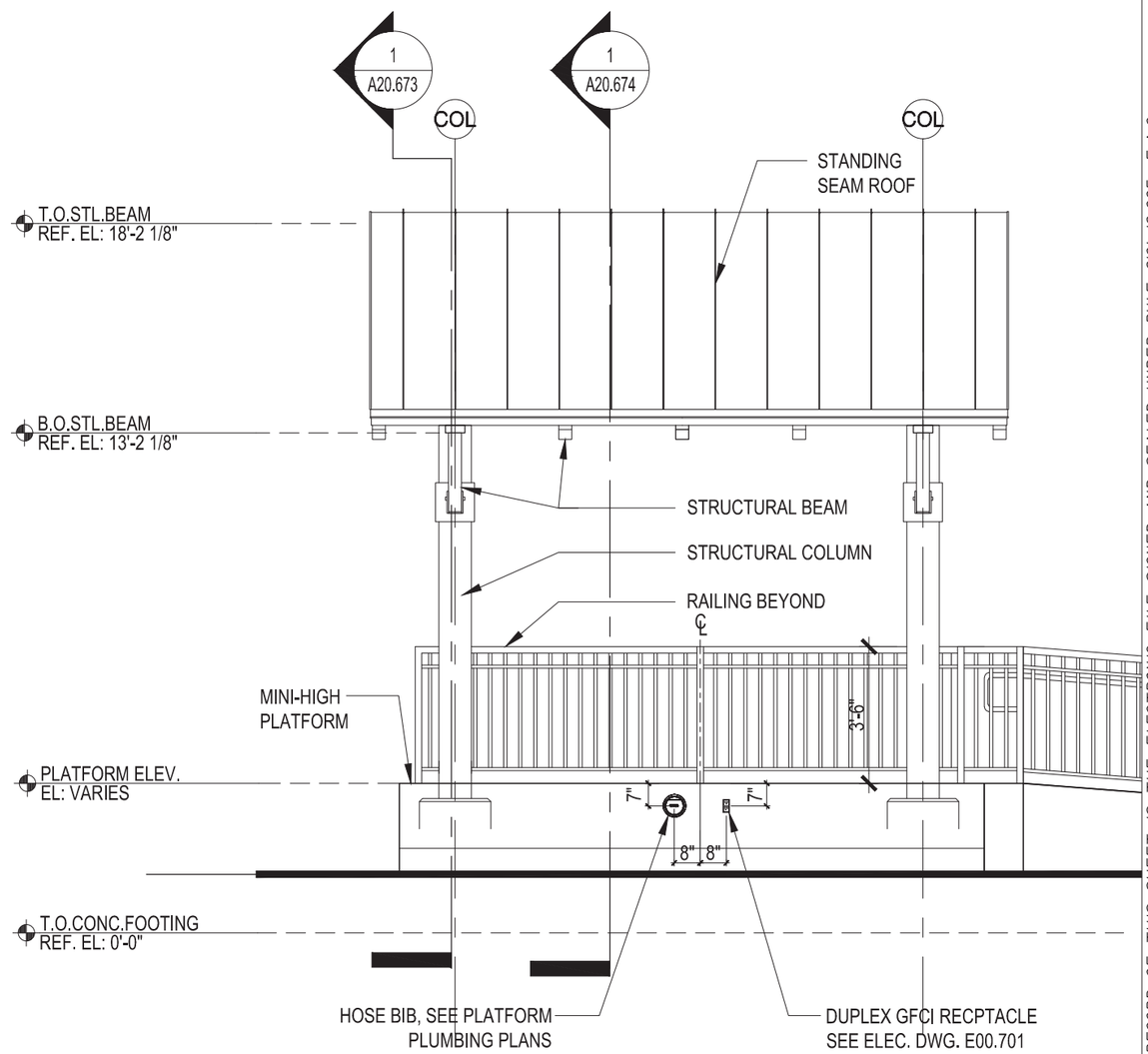

1 / A20.572 CANOPY TYPE "F" - MINI-HIGH KISSIMMEE PLATFORM ELEVATION
SCALE 1/4" = 1'-0"

NOTICE: THE OFFICIAL RECORD OF THIS SHEET IS THE ELECTRONIC FILE SIGNED AND SEALED UNDER RULE 61G1-16.005, F.A.C.

REVISIONS					
DATE	BY	DESCRIPTION	DATE	BY	DESCRIPTION

MICHEAL K. CHATHAM, AIA FLORIDA AR 13635

HELMAN HURLEY CHARVAT PEACOCK / ARCHITECTS, INC.

120 North Orange Ave Orlando, FL 32801
P: 407 644 2656 F: 407 628 3269 www.HHCP.com
AA C000328

STATE OF FLORIDA
DEPARTMENT OF TRANSPORTATION

ROAD NO.	COUNTY	FINANCIAL PROJECT ID
CFRC P2S	OSCEOLA	423446-9-52-01

CENTRAL FLORIDA COMMUTER RAIL TRANSIT (CFCRT) PHASE 2 SOUTH

CANOPY F
ENLARGED ELEVATIONS

SHEET NO. 127

DRAWING NO.
A20.573

NOTES:
PREMANUFACURED CUPALA, SEE SPECIFICATIONS

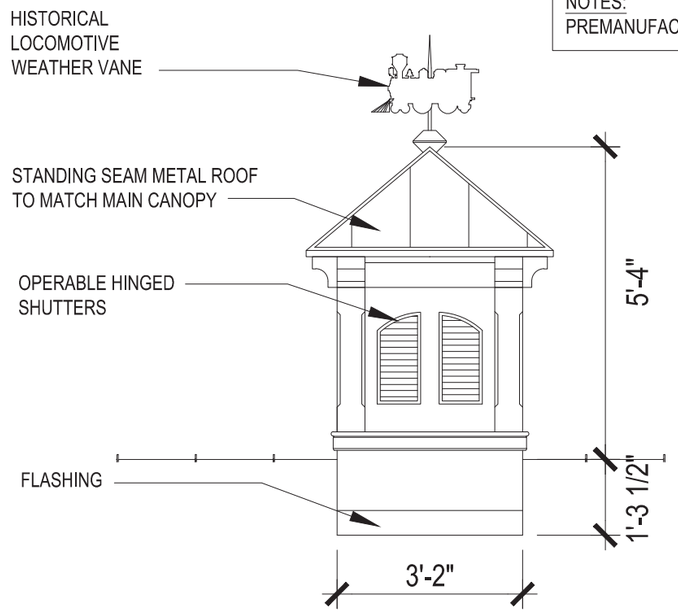

2 / A20.573 — CUPOLA ELEVATION (SIDE)
SCALE 3/8" = 1'-0"

NOTES:
ISOLATE DISSIMILAR METALS TO PREVENT CORROSION

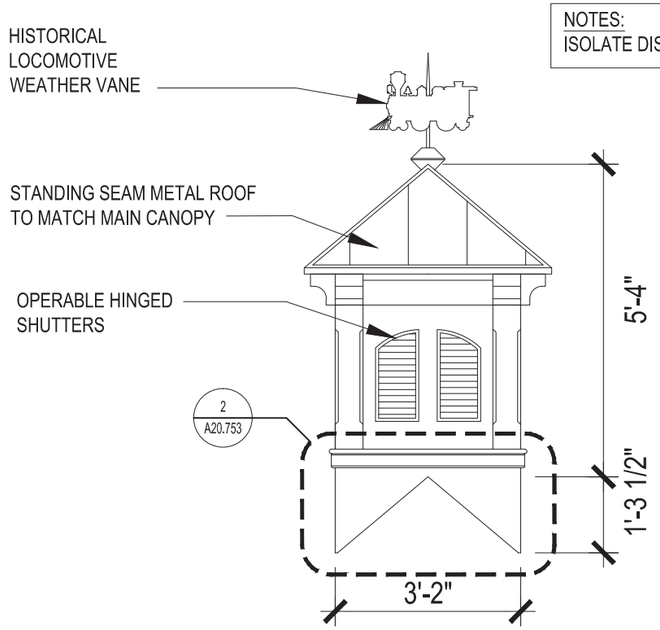

1 / A20.573 — CUPOLA ELEVATION (FRONT)
SCALE 3/8" = 1'-0"

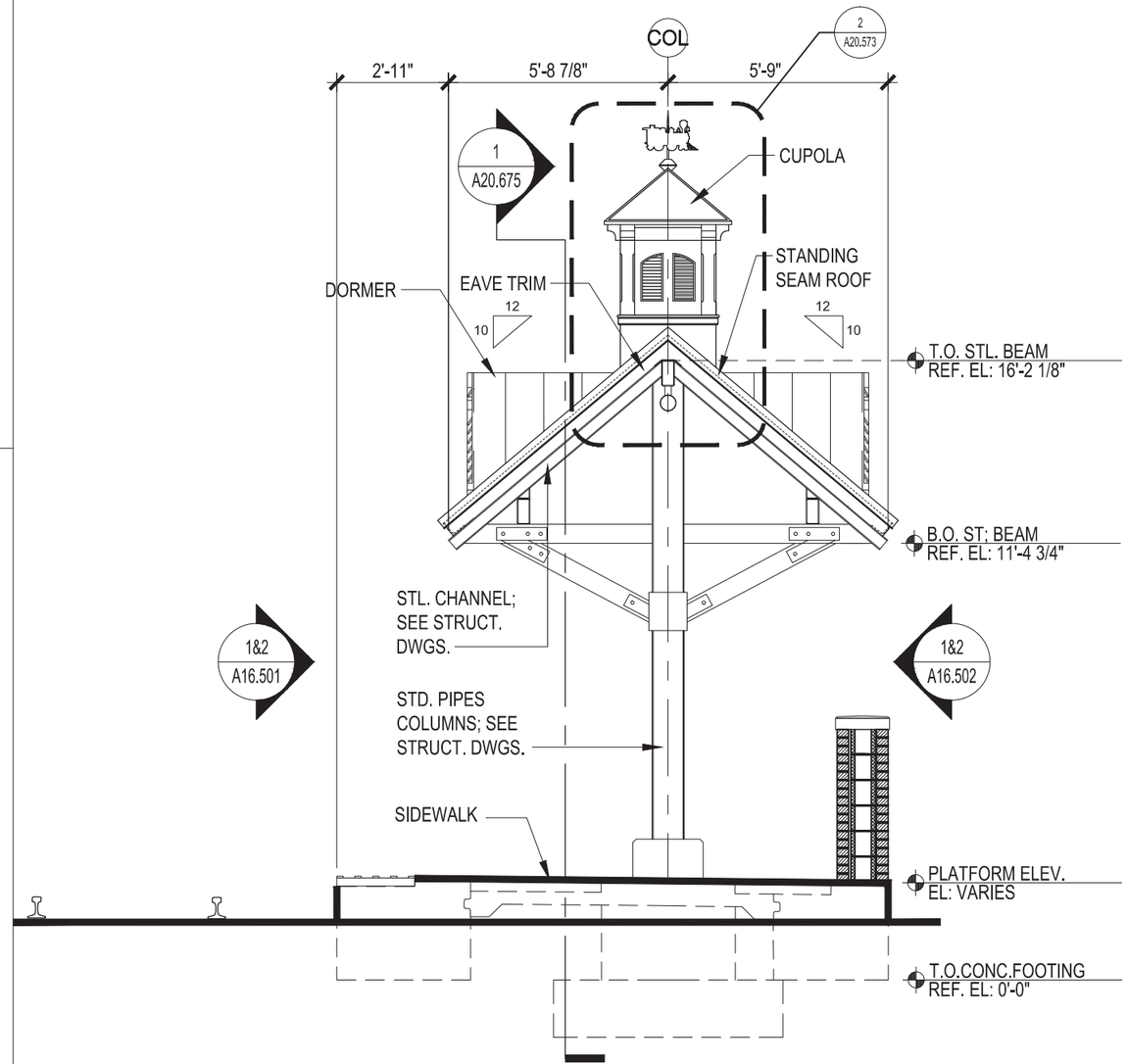

1 / A20.573 — CANOPY TYPE "F" - KISSIMMEE PLATFORM SIDE ELEVATION
SCALE 1/4" = 1'-0"

NOTICE: THE OFFICIAL RECORD OF THIS SHEET IS THE ELECTRONIC FILE SIGNED AND SEALED UNDER RULE 61G1-16.005, F.A.C.

REVISIONS					
DATE	BY	DESCRIPTION	DATE	BY	DESCRIPTION

MICHEAL K. CHATHAM, AIA FLORIDA AR 13635
HELMAN HURLEY CHARVAT PEACOCK / ARCHITECTS, INC.
120 North Orange Ave Orlando, FL 32801
P: 407 644 2656 F: 407 628 3269 www.HHCP.com

STATE OF FLORIDA
DEPARTMENT OF TRANSPORTATION

ROAD NO.	COUNTY	FINANCIAL PROJECT ID
CFRC P2S	OSCEOLA	423446-9-52-01

CENTRAL FLORIDA COMMUTER RAIL TRANSIT (CFCRT) PHASE 2, SOUTH

CANOPY F
ENLARGED ELEVATIONS

SHEET NO. 128

DRAWING NO.
A20.605

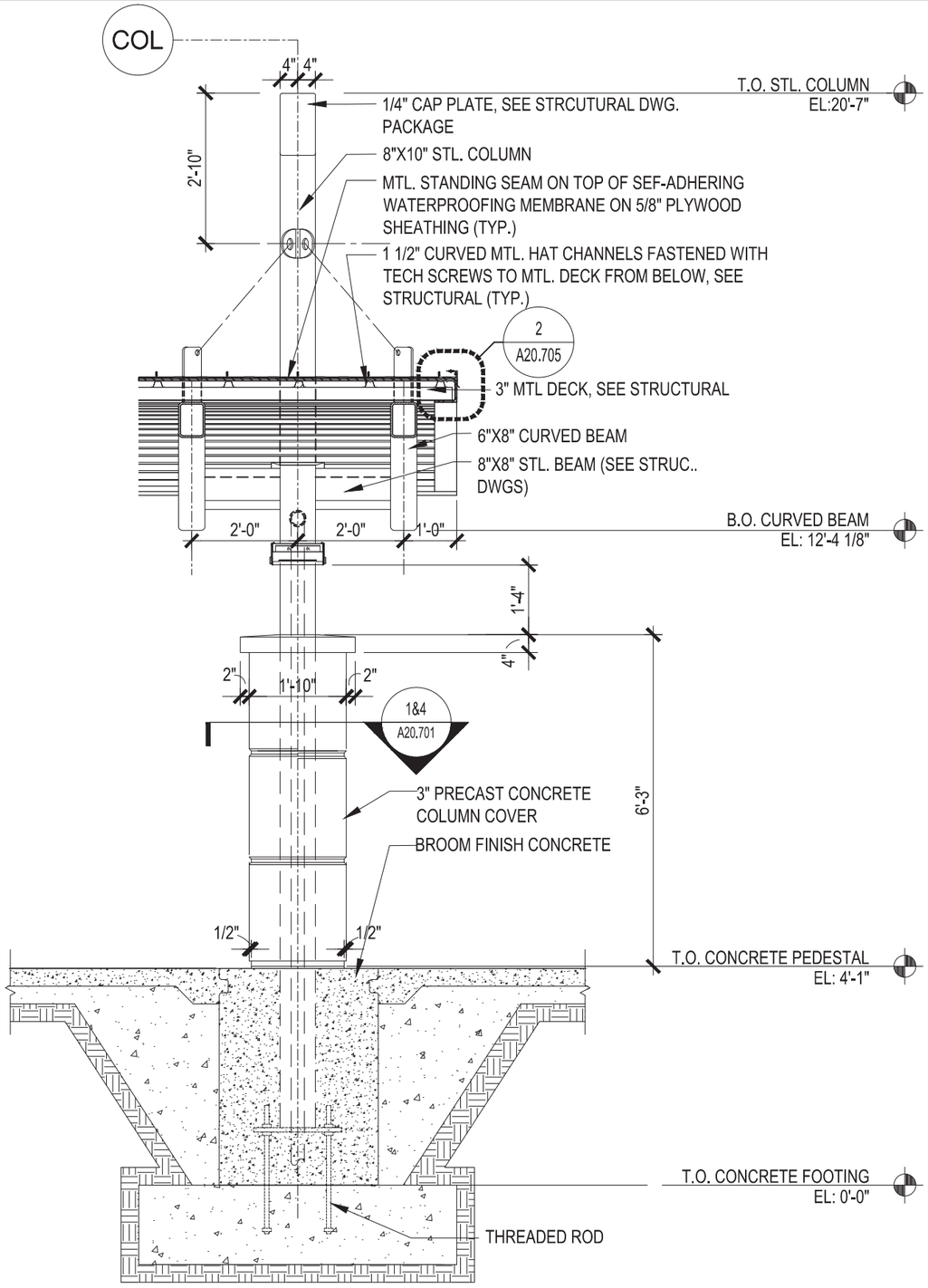

2 A20.605 CROSS SECTION - MINI-HIGH CANOPY "A"
SCALE 3/8" = 1'-0"

NOTE: SEE STRUCTURE SHEET S20.602 FOR ADDITIONAL INFORMATION.

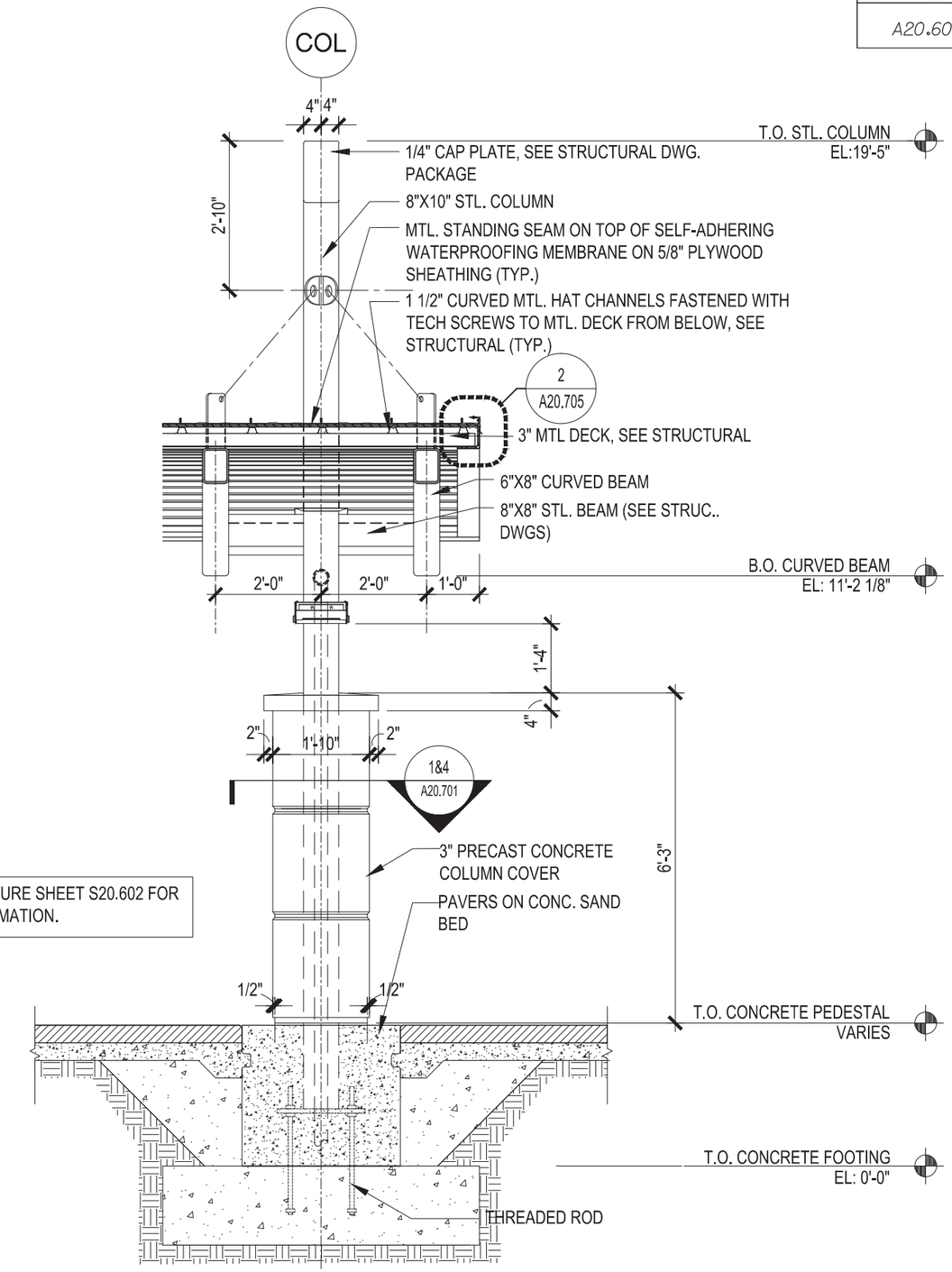

1 A20.605 TYP. SECTION - CANOPY "A"
SCALE 3/8" = 1'-0"

NOTICE: THE OFFICIAL RECORD OF THIS SHEET IS THE ELECTRONIC FILE SIGNED AND SEALED UNDER RULE 61G1-16.005, F.A.C.

REVISIONS					
DATE	BY	DESCRIPTION	DATE	BY	DESCRIPTION

MICHEAL K. CHATHAM, AIA FLORIDA AR 13635
HELMAN HURLEY CHARVAT PEACOCK / ARCHITECTS, INC.
120 North Orange Ave Orlando, FL 32801
P: 407 644 2656 F: 407 628 3269 www.HHCP.com

STATE OF FLORIDA
DEPARTMENT OF TRANSPORTATION

ROAD NO.	COUNTY	FINANCIAL PROJECT ID
CFRC P2S	VARIOUS	423446-9-52-01

CENTRAL FLORIDA COMMUTER RAIL TRANSIT (CFCRT) PHASE 2, SOUTH

CANOPY "A"
SECTION

SHEET NO.
129

05/06/2015 2:58pm S:\Domestic\258018 Phase 2 South and VSLMF\05 PRODUCTION\AutoCAD HHCP\Sheet Files\STATION-DETAIL SHEETS\A20.605.dwg,A20-605

DRAWING NO.
A20.606

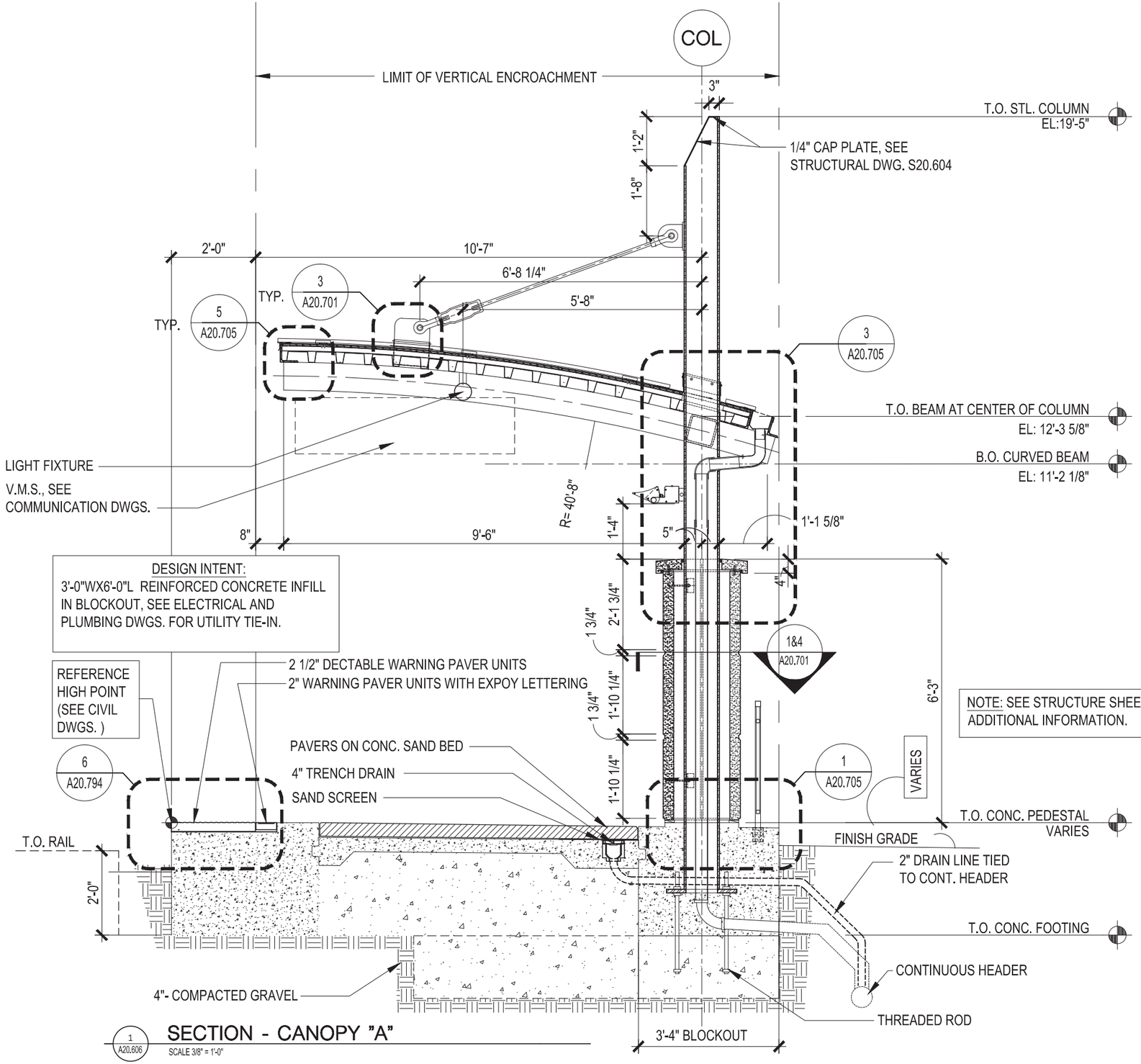

1 A20.606 **SECTION - CANOPY "A"**
SCALE 3/8" = 1'-0"

NOTICE: THE OFFICIAL RECORD OF THIS SHEET IS THE ELECTRONIC FILE SIGNED AND SEALED UNDER RULE 61G1-16.005, F.A.C.

REVISIONS					
DATE	BY	DESCRIPTION	DATE	BY	DESCRIPTION

MICHEAL K. CHATHAM, AIA FLORIDA AR 13635

HELMAN HURLEY CHARVAT PEACOCK / ARCHITECTS, INC.

120 North Orange Ave Orlando, FL 32801
P: 407 644 2656 F: 407 628 3269 www.HHCP.com

STATE OF FLORIDA
DEPARTMENT OF TRANSPORTATION

ROAD NO.	COUNTY	FINANCIAL PROJECT ID
CFRC P2S	VARIES	423446-9-52-01

CENTRAL FLORIDA COMMUTER RAIL TRANSIT (CFCRT) PHASE 2 SOUTH

CANOPY "A"
SECTION

SHEET NO.
130

DRAWING NO.
A20.607

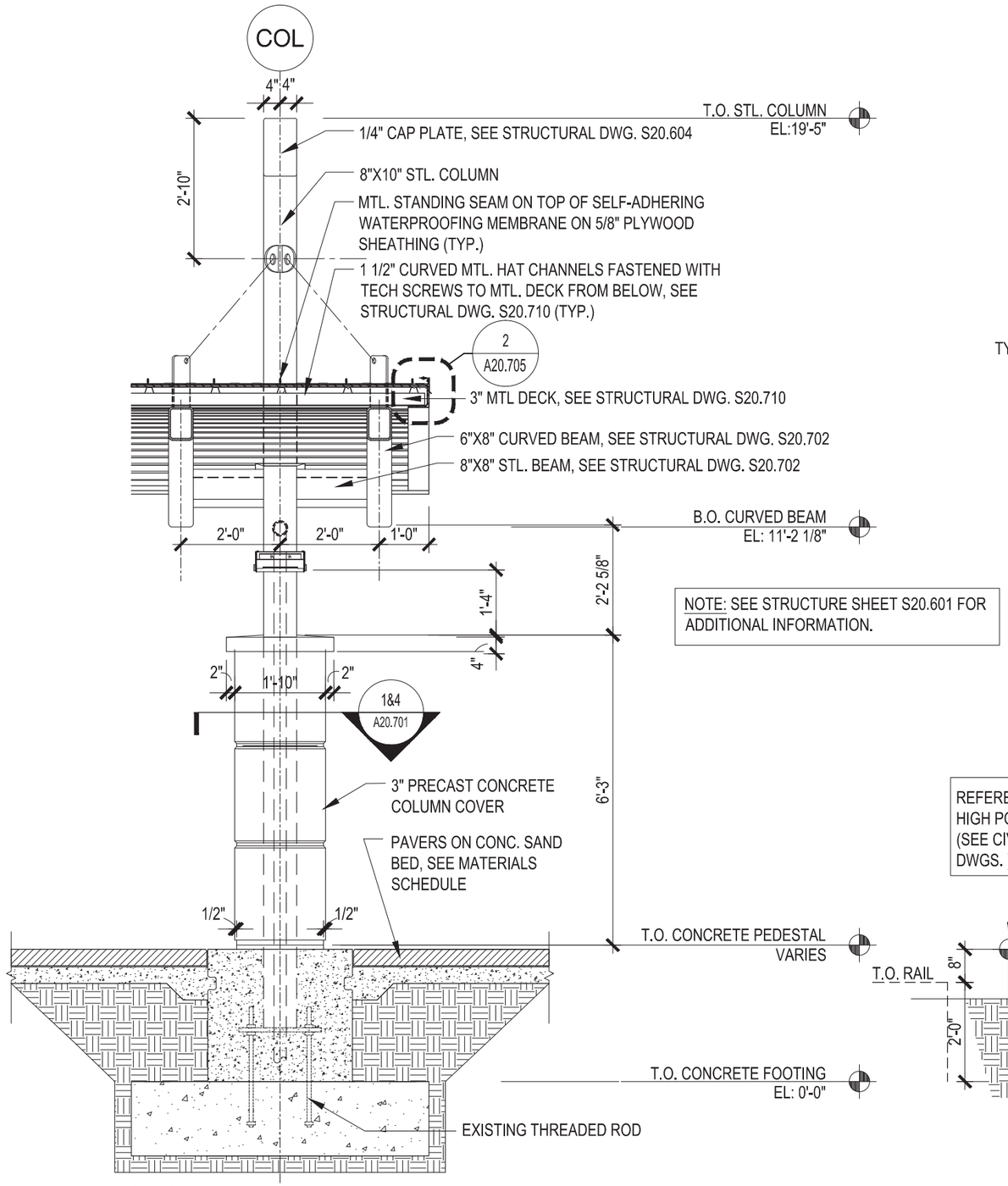

NOTE: SEE STRUCTURE SHEET S20.601 FOR ADDITIONAL INFORMATION.

2 A20.607 SECTION - CANOPY "A"
SCALE 3/8" = 1'-0"

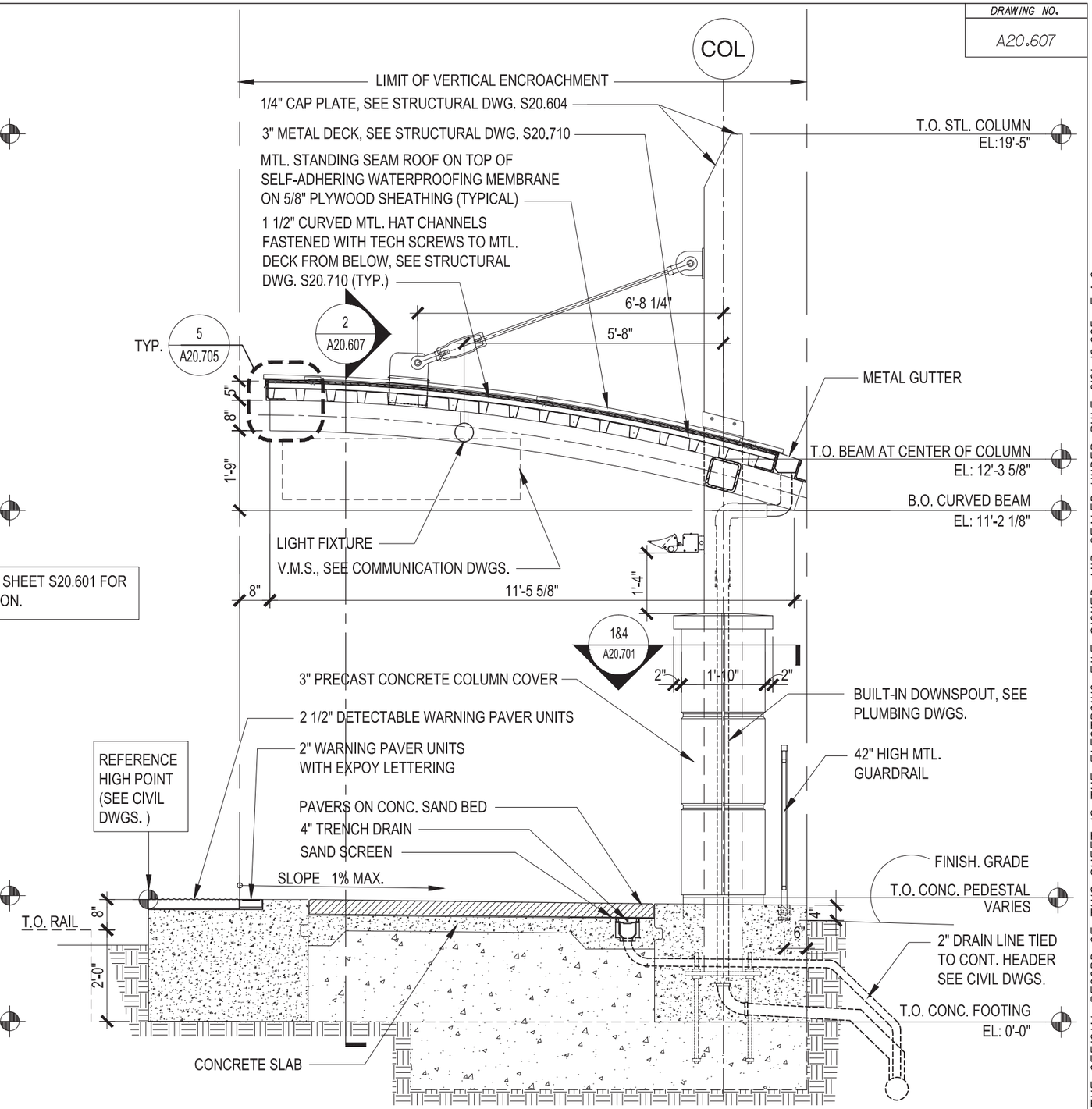

1 A20.607 SECTION - CANOPY "A"
SCALE 3/8" = 1'-0"

NOTICE: THE OFFICIAL RECORD OF THIS SHEET IS THE ELECTRONIC FILE SIGNED AND SEALED UNDER RULE 61G1-16.005, F.A.C.

REVISIONS					
DATE	BY	DESCRIPTION	DATE	BY	DESCRIPTION

MICHEAL K. CHATHAM, AIA FLORIDA AR 13635
HELMAN HURLEY CHARVAT PEACOCK / ARCHITECTS, INC.
120 North Orange Ave Orlando, FL 32801
P: 407 644 2656 F: 407 628 3269 www.HHCP.com

STATE OF FLORIDA
DEPARTMENT OF TRANSPORTATION

ROAD NO.	COUNTY	FINANCIAL PROJECT ID
CFRC P2S	VARIOUS	423446-9-52-01

CENTRAL FLORIDA COMMUTER RAIL TRANSIT (CFCRT) PHASE 2, SOUTH

CANOPY "A"
SECTIONS

SHEET NO.
131

05/06/2015 3:01pm S:\Domestic\258018 Phase 2 South and VSLMF\05 PRODUCTION\AutoCAD HHCP\Sheet Files\STATION-DETAIL SHEETS\A20.607.dwg,A20-607

DRAWING NO.
A20.614

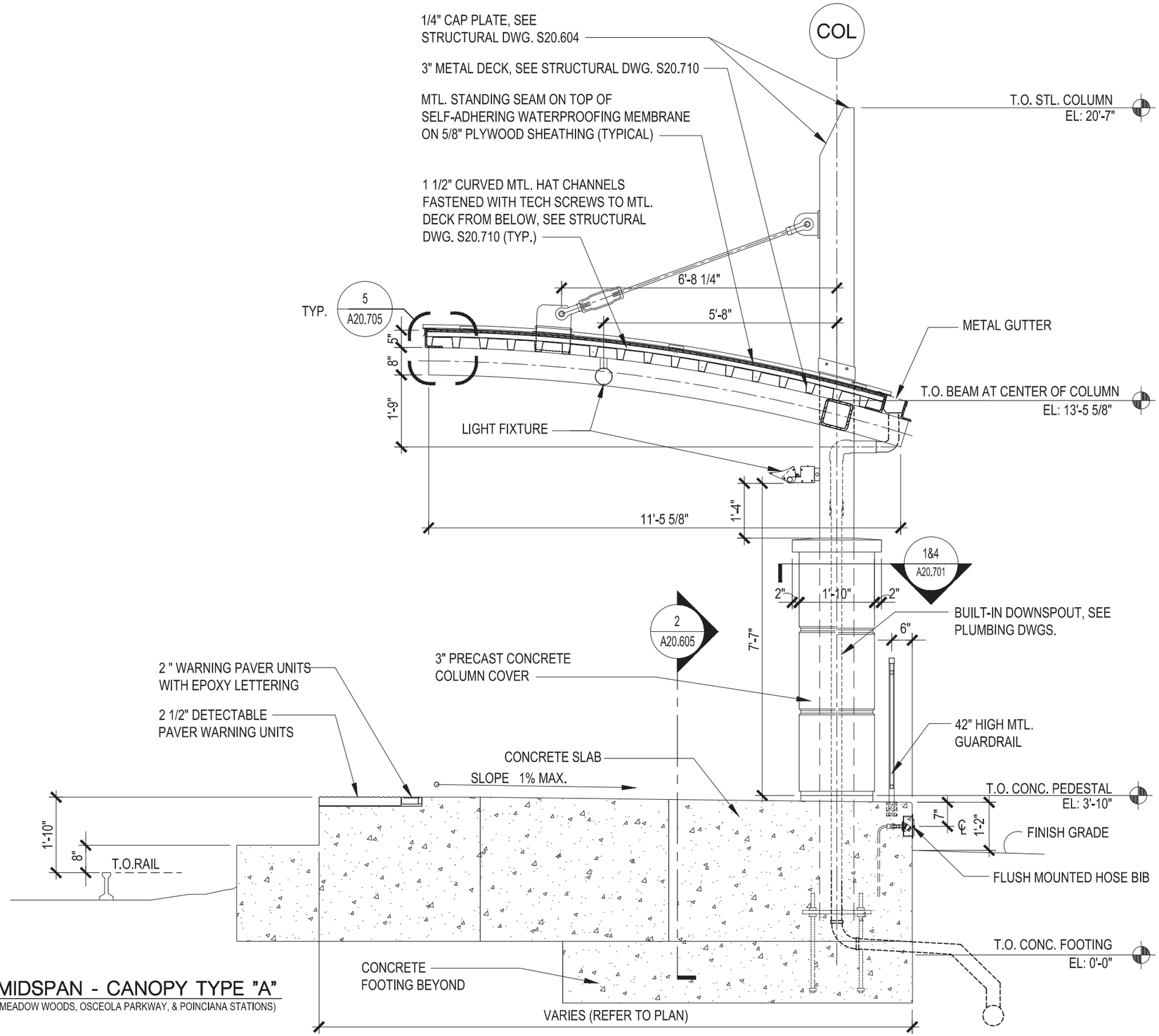

1 / A20.614 — MINI-HIGH PLATFORM SECTION AT MIDSPAN - CANOPY TYPE "A"

SCALE 3/8" = 1'-0"

(MEADOW WOODS, OSCEOLA PARKWAY, & POINCIANA STATIONS)

NOTICE: THE OFFICIAL RECORD OF THIS SHEET IS THE ELECTRONIC FILE SIGNED AND SEALED UNDER RULE 61G1-16.005, F.A.C.

REVISIONS					
DATE	BY	DESCRIPTION	DATE	BY	DESCRIPTION

MICHEAL K. CHATHAM, AIA FLORIDA AR 13635

HELMAN HURLEY CHARVAT PEACOCK / ARCHITECTS, INC.

120 North Orange Ave Orlando, FL 32801
P: 407 644 2656 F: 407 628 3269 www.HHCP.com

STATE OF FLORIDA
DEPARTMENT OF TRANSPORTATION

ROAD NO.	COUNTY	FINANCIAL PROJECT ID
CFRC P2S	VARIOUS	423446-9-52-01

CENTRAL FLORIDA COMMUTER RAIL TRANSIT (CFCRT) PHASE 2 SOUTH

CANOPY "A"

MINI-HIGH SECTION AT MIDSPAN

SHEET NO. 132

DRAWING NO.
A20.615

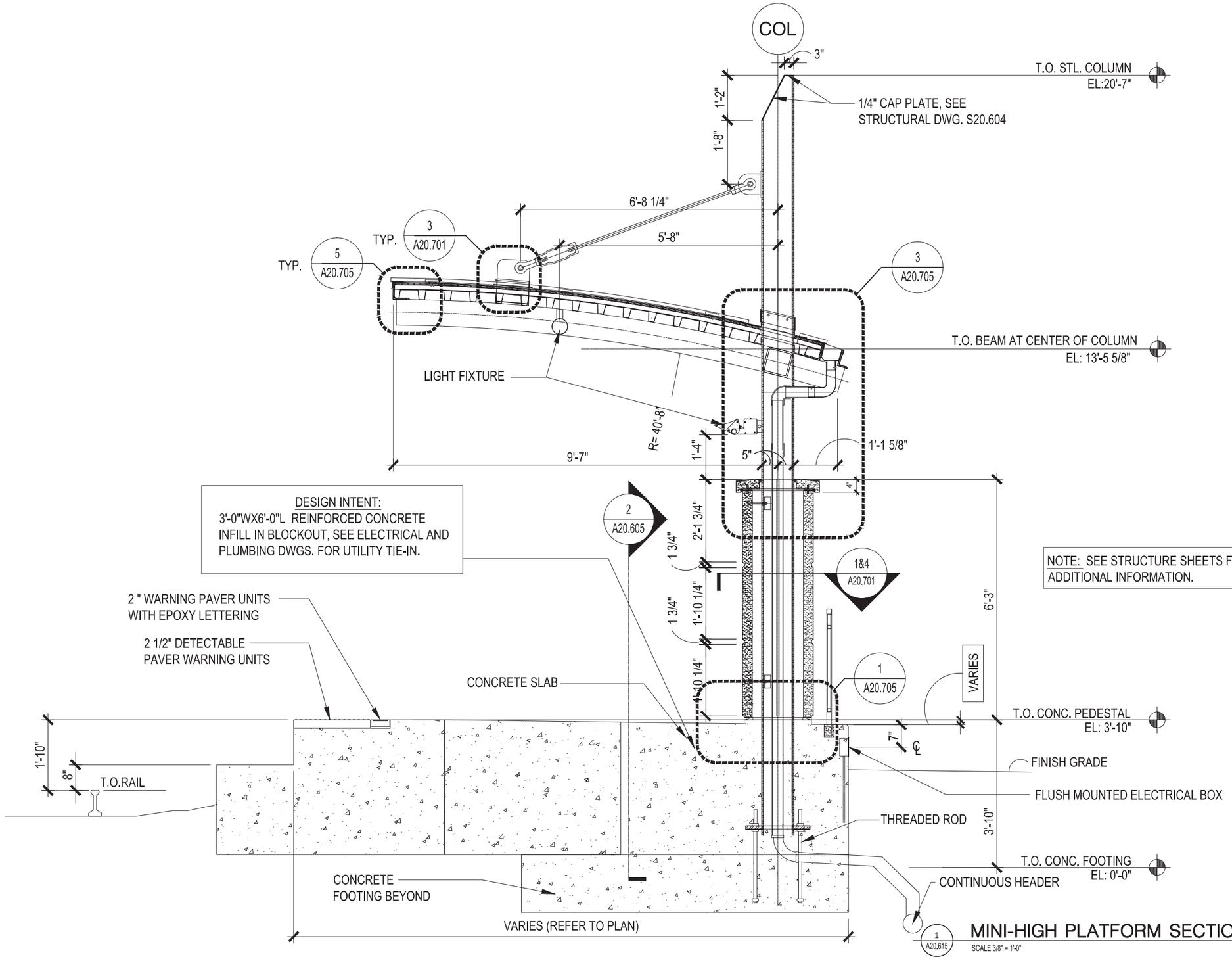

DESIGN INTENT:
3'-0"WX6'-0"L REINFORCED CONCRETE INFILL IN BLOCKOUT, SEE ELECTRICAL AND PLUMBING DWGS. FOR UTILITY TIE-IN.

NOTE: SEE STRUCTURE SHEETS FOR ADDITIONAL INFORMATION.

MINI-HIGH PLATFORM SECTION AT COLUMN - CANOPY TYPE "A"

SCALE 3/8" = 1'-0"

(MEADOW WOODS, OSCEOLA PARKWAY, & POINCIANA STATIONS)

NOTICE: THE OFFICIAL RECORD OF THIS SHEET IS THE ELECTRONIC FILE SIGNED AND SEALED UNDER RULE 61G1-16.005, F.A.C.

REVISIONS					
DATE	BY	DESCRIPTION	DATE	BY	DESCRIPTION

MICHEAL K. CHATHAM, AIA FLORIDA AR 13635

HELMAN HURLEY CHARVAT PEACOCK / ARCHITECTS, INC.

120 North Orange Ave Orlando, FL 32801
P: 407 644 2656 F: 407 628 3269 www.HHCP.com

STATE OF FLORIDA
DEPARTMENT OF TRANSPORTATION

ROAD NO.	COUNTY	FINANCIAL PROJECT ID
CFRC P2S	VARIOUS	423446-9-52-01

CENTRAL FLORIDA COMMUTER RAIL TRANSIT (CFCRT) PHASE 2 SOUTH

CANOPY "A"

MINI-HIGH SECTION AT COLUMN

SHEET NO. 133

DRAWING NO.
A20.671

SECTION AT COLUMN - CANOPY "F" AT KISSIMMEE

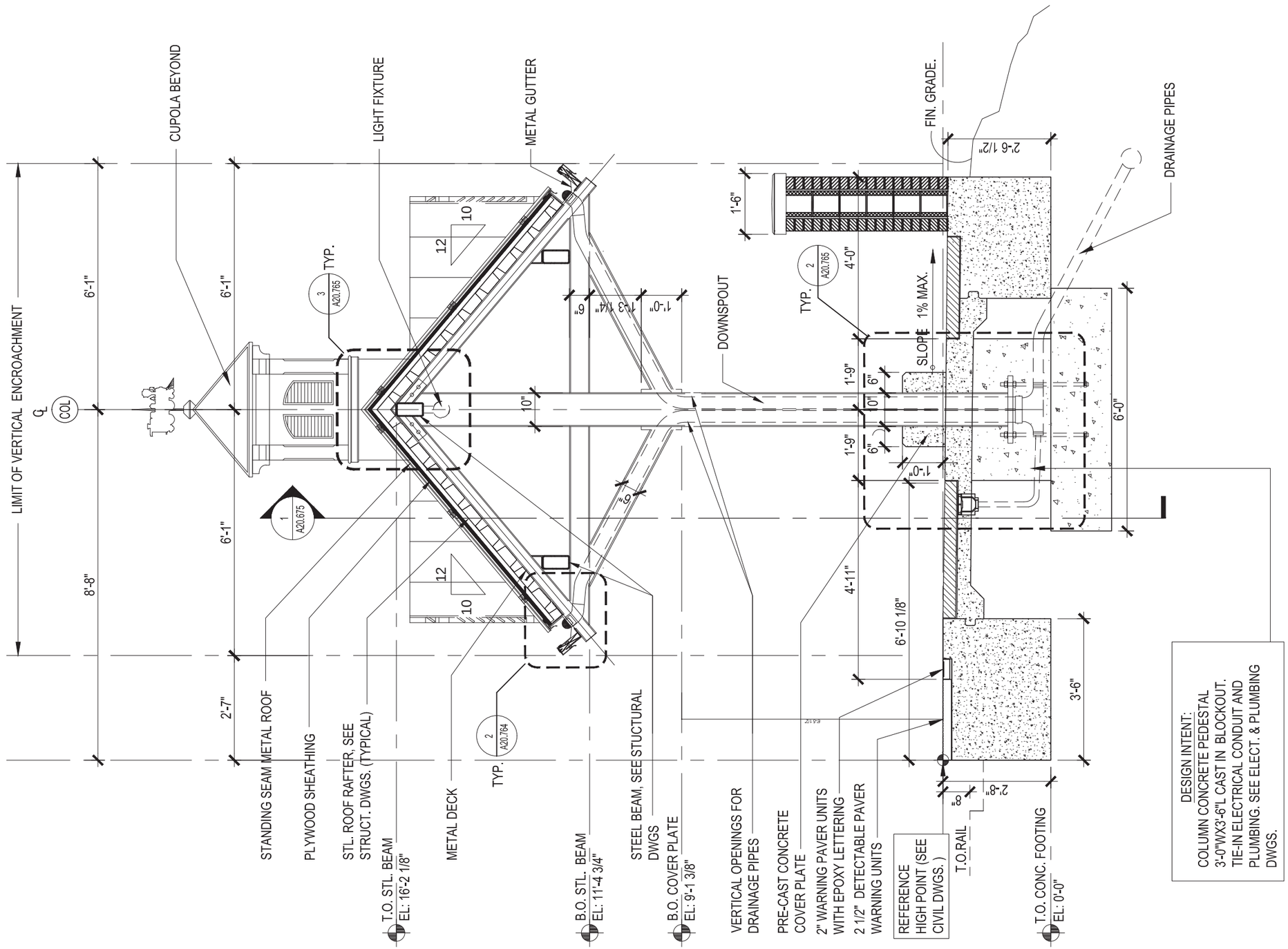

1 A20.671
SCALE 3/8" = 1'-0"

NOTICE: THE OFFICIAL RECORD OF THIS SHEET IS THE ELECTRONIC FILE SIGNED AND SEALED UNDER RULE 61G1-16.005, F.A.C.

REVISIONS					
DATE	BY	DESCRIPTION	DATE	BY	DESCRIPTION

MICHEAL K. CHATHAM, AIA FLORIDA AR 13635

HELMAN HURLEY CHARVAT PEACOCK / ARCHITECTS, INC.

120 North Orange Ave Orlando, FL 32801
P: 407 644 2656 F: 407 628 3269 www.HHCP.com
AA C000328

STATE OF FLORIDA
DEPARTMENT OF TRANSPORTATION

ROAD NO.	COUNTY	FINANCIAL PROJECT ID
CFRC P2S	OSCEOLA	423446-9-52-01

CENTRAL FLORIDA COMMUTER RAIL TRANSIT (CFCRT) PHASE 2, SOUTH

CANOPY "F" - TYPICAL PLATFORM SECTION AT COLUMN

SHEET NO. 134

DRAWING NO.
A20.672

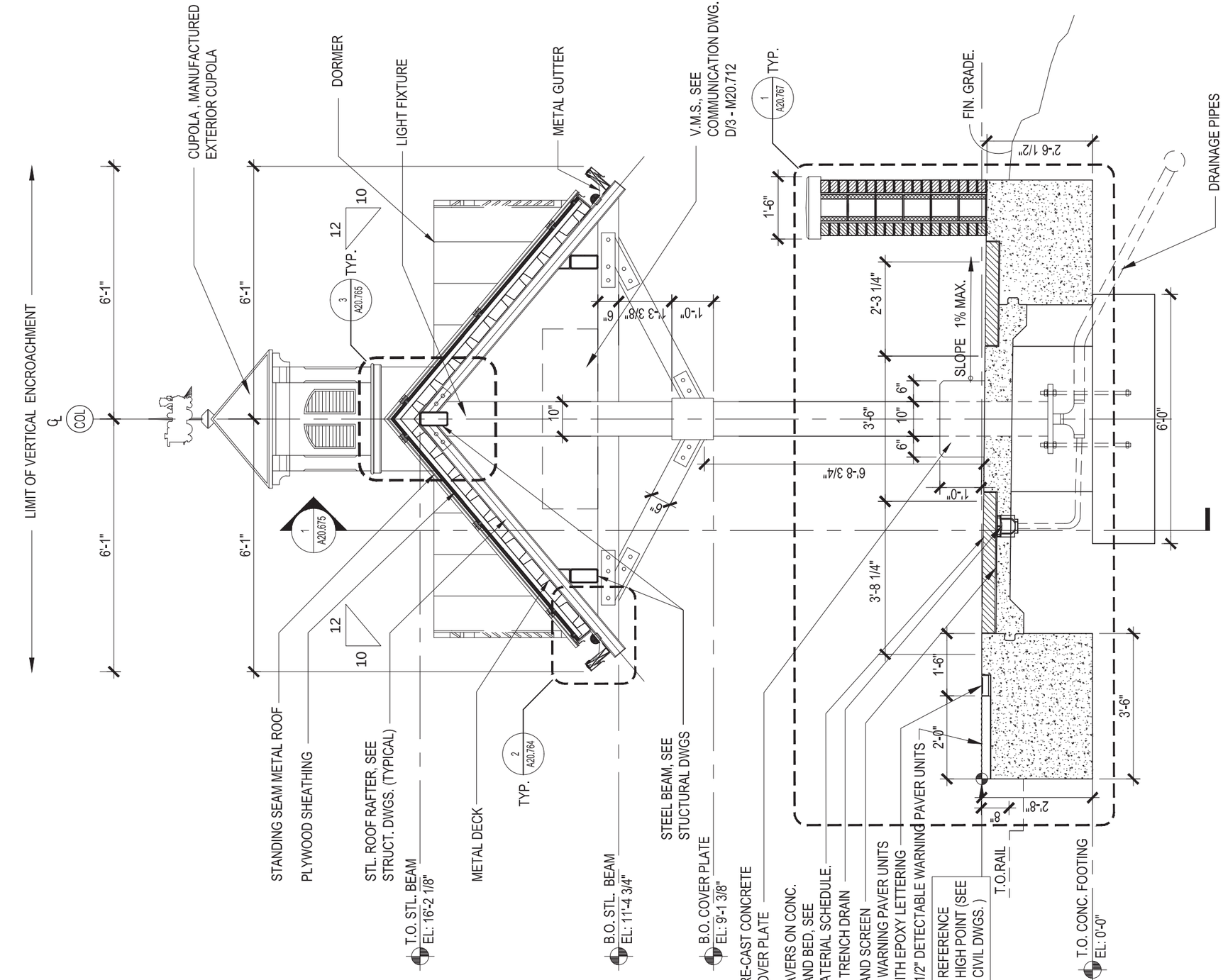

SECTION AT MIDSPAN - CANOPY "F" AT KISSIMMEE

1
A20.672
SCALE 3/8" = 1'-0"

NOTICE: THE OFFICIAL RECORD OF THIS SHEET IS THE ELECTRONIC FILE SIGNED AND SEALED UNDER RULE 61G1-16.005, F.A.C.

REVISIONS					
DATE	BY	DESCRIPTION	DATE	BY	DESCRIPTION

MICHEAL K. CHATHAM, AIA FLORIDA AR 13635

HELMAN HURLEY CHARVAT PEACOCK / ARCHITECTS, INC.

120 North Orange Ave Orlando, FL 32801
P: 407 644 2656 F: 407 628 3269 www.HHCP.com

STATE OF FLORIDA
DEPARTMENT OF TRANSPORTATION

ROAD NO.	COUNTY	FINANCIAL PROJECT ID
CFRC P2S	OSCEOLA	423446-9-52-01

CENTRAL FLORIDA COMMUTER RAIL TRANSIT (CFCRT) PHASE 2, SOUTH

CANOPY "F" - TYPICAL PLATFORM SECTION AT MIDSPAN

SHEET NO.
135

DRAWING NO.
A20.673

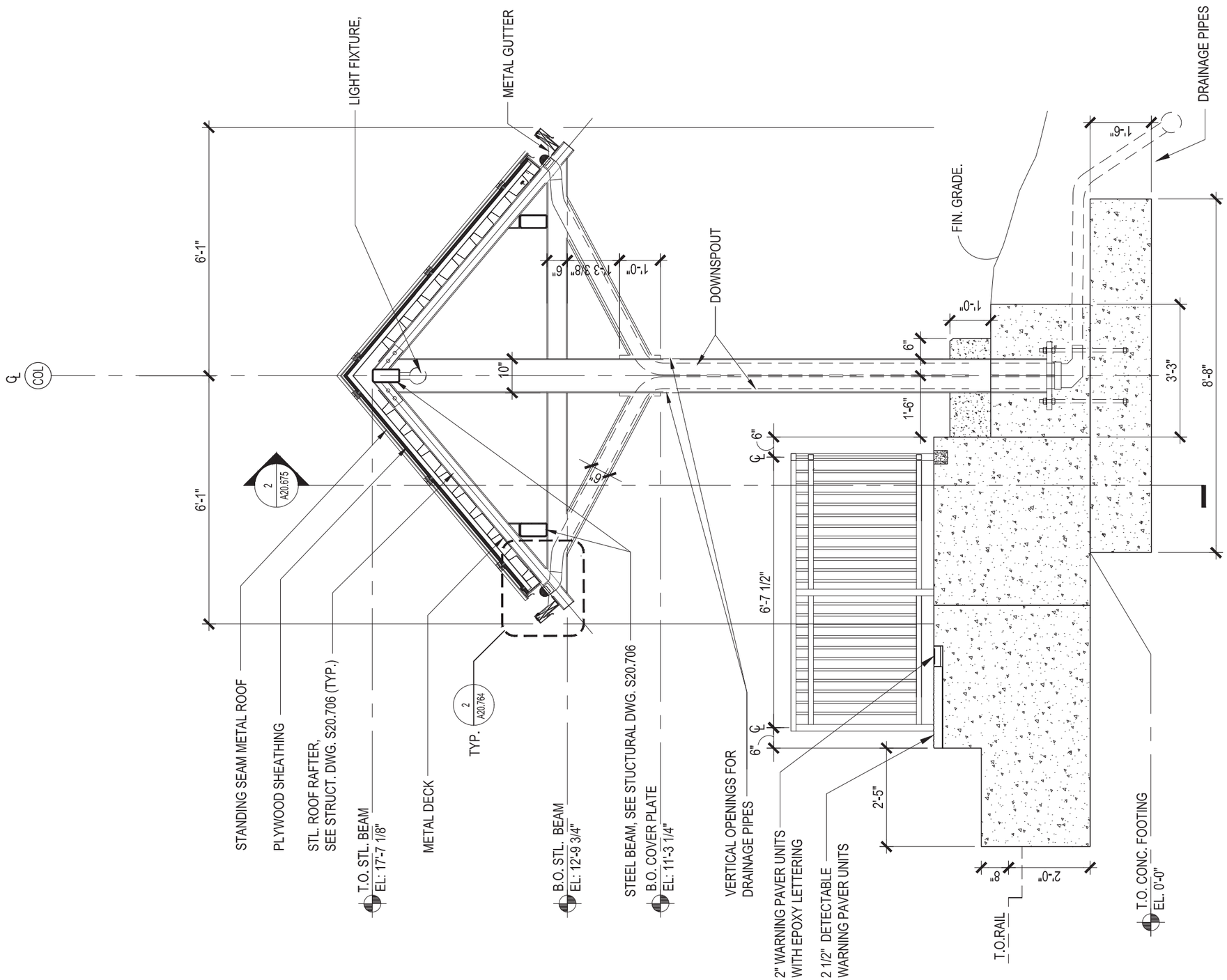

MINI-HIGH SECTION AT COLUMN - CANOPY "F"

1 A20.673 — SCALE 3/8" = 1'-0"

NOTICE: THE OFFICIAL RECORD OF THIS SHEET IS THE ELECTRONIC FILE SIGNED AND SEALED UNDER RULE 61G1-16.005, F.A.C.

REVISIONS					
DATE	BY	DESCRIPTION	DATE	BY	DESCRIPTION

MICHEAL K. CHATHAM, AIA FLORIDA AR 13635

HELMAN HURLEY CHARVAT PEACOCK / ARCHITECTS, INC.

120 North Orange Ave Orlando, FL 32801
P: 407 644 2656 F: 407 628 3269 www.HHCP.com

STATE OF FLORIDA
DEPARTMENT OF TRANSPORTATION

ROAD NO.	COUNTY	FINANCIAL PROJECT ID
CFRC P2S	OSCEOLA	423446-9-52-01

CENTRAL FLORIDA COMMUTER RAIL TRANSIT (CFCRT) PHASE 2, SOUTH

CANOPY "F"
MINI-HIGH PLATFORM SECTION

SHEET NO. 136

DRAWING NO.
A20.674

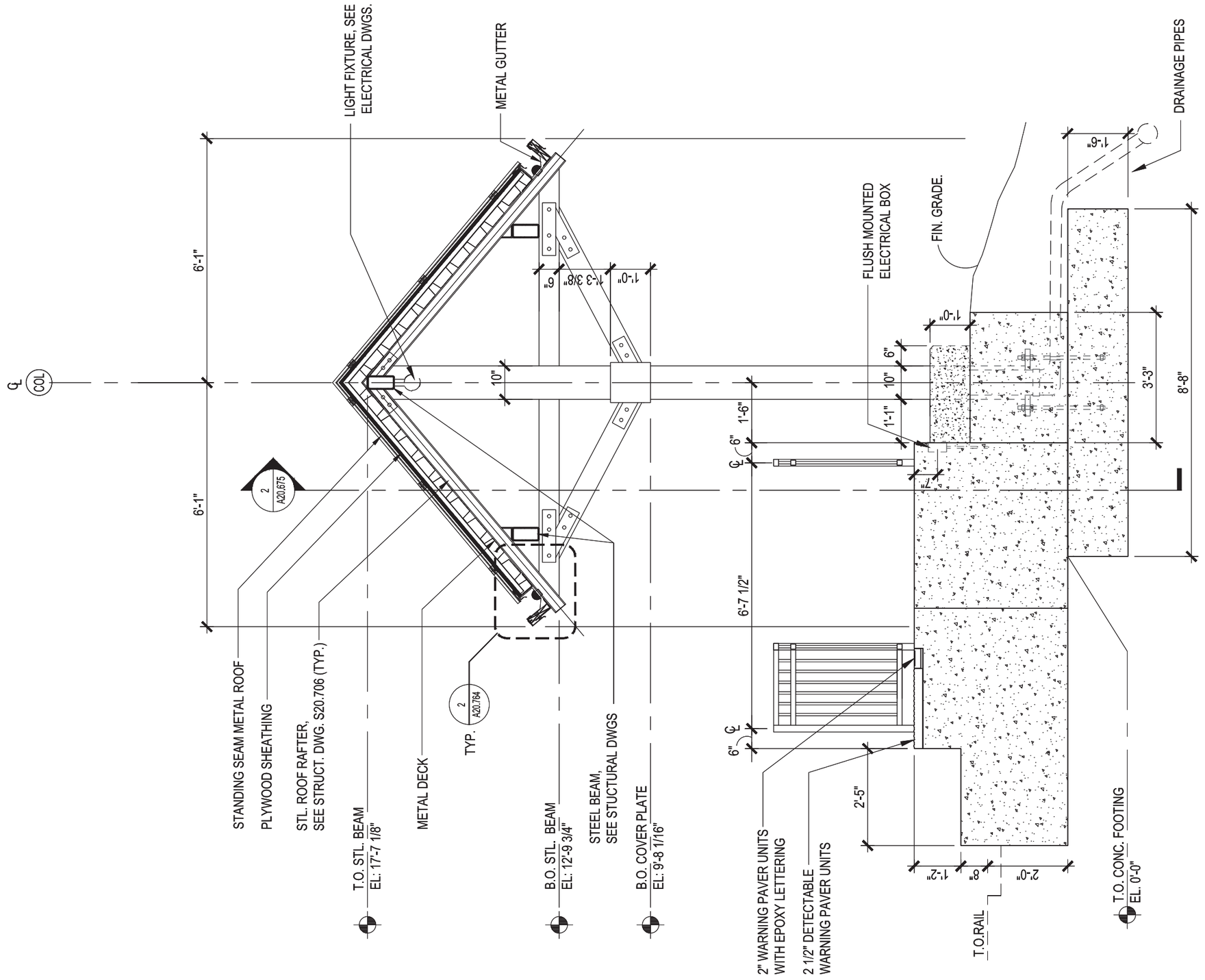

1 MINI-HIGH SECTION AT MIDSPAN - CANOPY "F"
SCALE 3/8" = 1'-0"

NOTICE: THE OFFICIAL RECORD OF THIS SHEET IS THE ELECTRONIC FILE SIGNED AND SEALED UNDER RULE 61G1-16.005, F.A.C.

REVISIONS					
DATE	BY	DESCRIPTION	DATE	BY	DESCRIPTION

MICHEAL K. CHATHAM, AIA FLORIDA AR 13635

HELMAN HURLEY CHARVAT PEACOCK / ARCHITECTS, INC.

120 North Orange Ave Orlando, FL 32801
P: 407 644 2656 F: 407 628 3269 www.HHCP.com

STATE OF FLORIDA
DEPARTMENT OF TRANSPORTATION

ROAD NO.	COUNTY	FINANCIAL PROJECT ID
CFRC P2S	OSCEOLA	423446-9-52-01

CENTRAL FLORIDA COMMUTER RAIL TRANSIT (CFCRT) PHASE 2, SOUTH

CANOPY "F"
MINI-HIGH PLATFORM SECTION

SHEET NO. 137

05/06/2015 3:11pm S:\Domestic\258018 Phase 2 South and VSLMF\05 PRODUCTION\AutoCAD HHCP\Sheet Files\STATION-DETAIL SHEETS\A20.674.dwg,A20-674

DRAWING NO.
A20.675

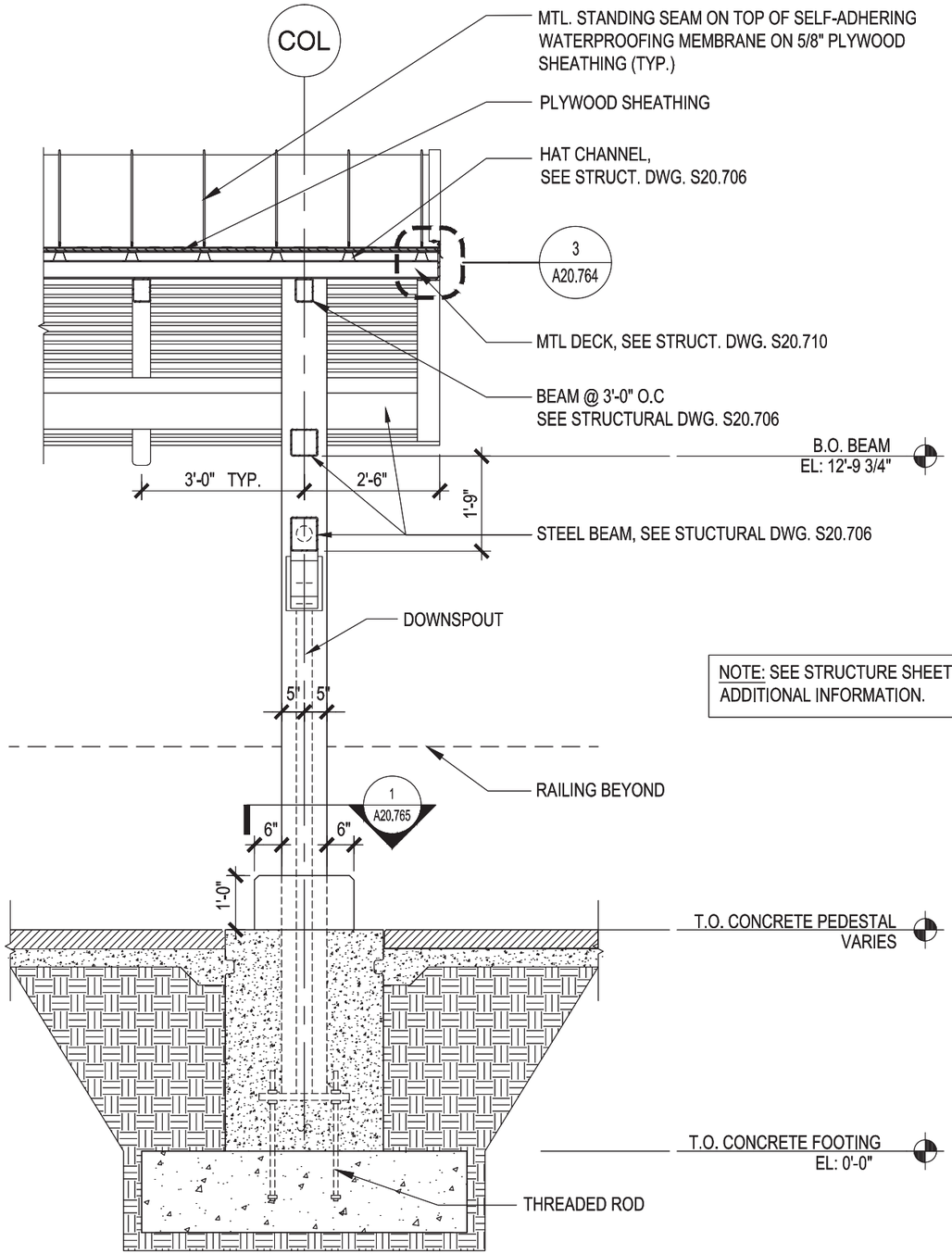

NOTE: SEE STRUCTURE SHEET S20.607 FOR ADDITIONAL INFORMATION.

2 A20.675 **TYP. SECTION - MINI HIGH CANOPY "F" AT KISSIMMEE STATION**
SCALE 3/8" = 1'-0"

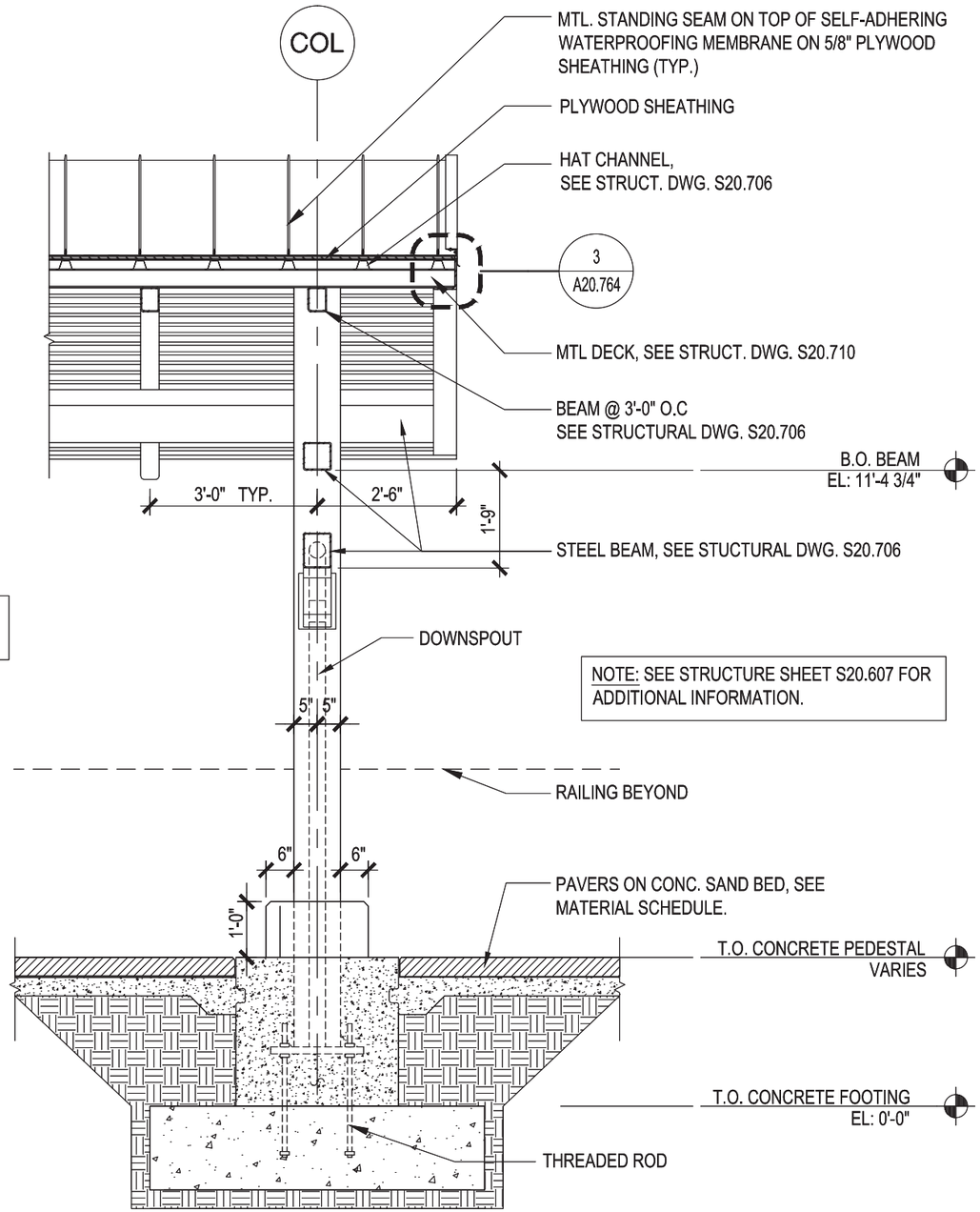

NOTE: SEE STRUCTURE SHEET S20.607 FOR ADDITIONAL INFORMATION.

1 A20.675 **TYP. SECTION - CANOPY "F" AT KISSIMMEE STATION**
SCALE 3/8" = 1'-0"

NOTICE: THE OFFICIAL RECORD OF THIS SHEET IS THE ELECTRONIC FILE SIGNED AND SEALED UNDER RULE 61G1-16.005, F.A.C.

REVISIONS					
DATE	BY	DESCRIPTION	DATE	BY	DESCRIPTION

MICHEAL K. CHATHAM, AIA FLORIDA AR 13635

HELMAN HURLEY CHARVAT PEACOCK / ARCHITECTS, INC.

120 North Orange Ave Orlando, FL 32801
P: 407 644 2656 F: 407 628 3269 www.HHCP.com
AA C000328

STATE OF FLORIDA
DEPARTMENT OF TRANSPORTATION

ROAD NO.	COUNTY	FINANCIAL PROJECT ID
CFRC P2S	OSCEOLA	423446-9-52-01

CENTRAL FLORIDA COMMUTER RAIL TRANSIT (CFCRT) PHASE 2, SOUTH

CANOPY "F" STANDARD & MINI-HIGH CROSS SECTION

SHEET NO. 138

DRAWING NO.
A20.701

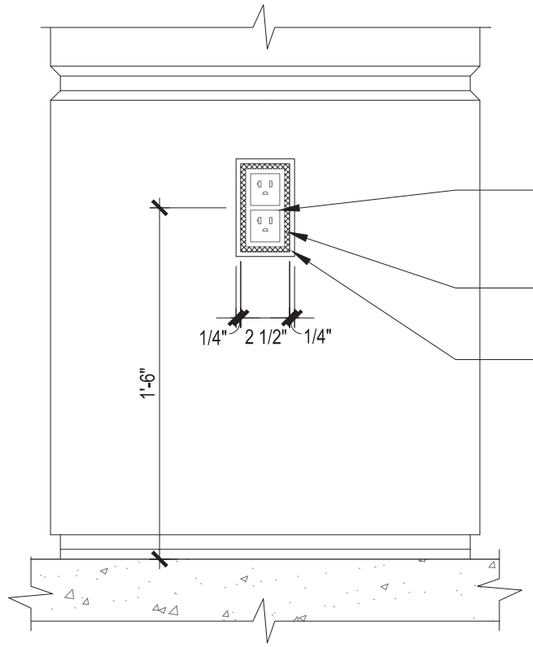

DUPLEX GFCI RECPTACLE
AT COLS. 4, 8, 16 & 20.
SEE ELEC. DWG. E00.701

SEALANT BTWN. OUTLET
BOX AND PRECAST

1/4" CHAMFER

5 A20.701

PRECAST CONC. COLUMN COVER - GFCI OUTLET DTL.

SCALE 1 1/2" = 1'-0"

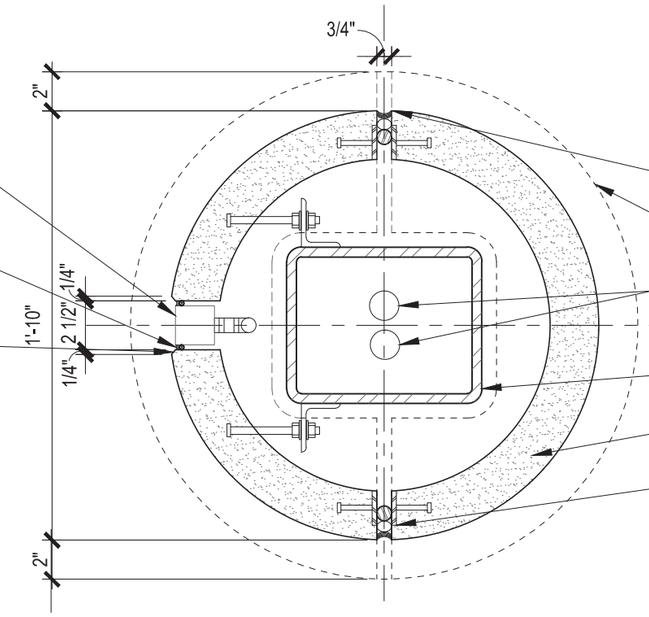

SEALANT AND BACKER ROD

LINE OF 2'-2" DIA.
PRECAST CONCRETE CAP ABOVE

ELECTRICAL CONDUIT
SEE ELEC. DWG. E00.703

8"X10" STEEL COLUMN,
SEE STRUCTURAL DWG. S20.702

3" PRECAST CONCRETE
COLUMN COVER

PLATE CAST IN COLUMN COVER
AND PROVIDE STEEL BAR OR
PLATE AS SHOWN FOR FIELD
WELDING, PER MANUFACTURE
REQUIREMENTS

4 A20.701

PRECAST CONC. COLUMN COVER DETAIL

SCALE 1 1/2" = 1'-0"

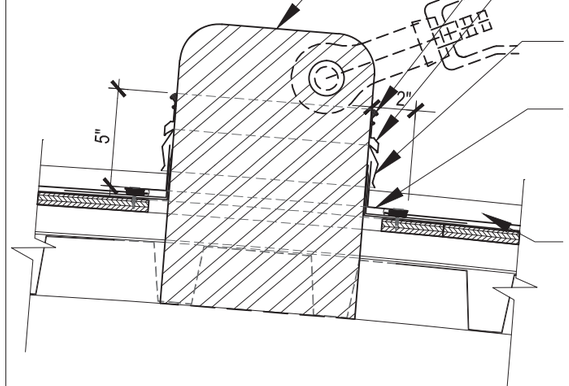

STEEL GUSSET PLATE
SEE STRUCTURAL
DWG. S20.702

SEALANT

REGLET "SM"
SURFACE MOUNTED

REGLET
"SPRINGLOK"
FLASHING

SEAM FLASHING

SELF-ADHERING
WATERPROOF
MEMBRANE

METAL STANDING
SEAM ROOF

3 A20.701

GUSSET PLATE SECTION

SCALE 1 1/2" = 1'-0"

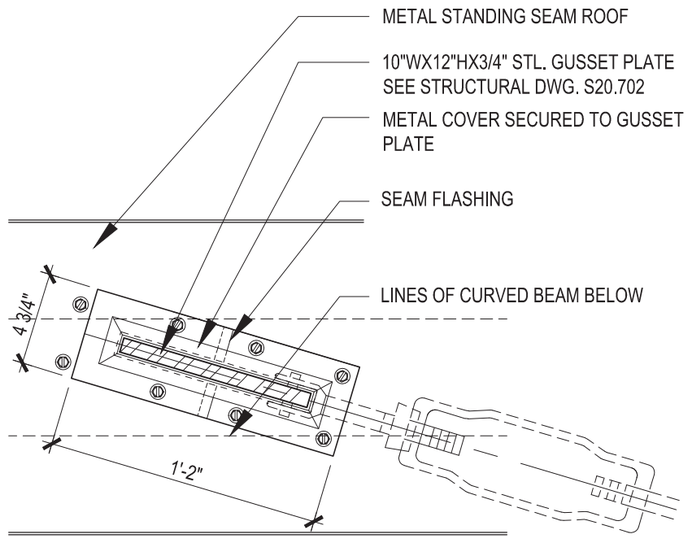

METAL STANDING SEAM ROOF

10"WX12"HX3/4" STL. GUSSET PLATE
SEE STRUCTURAL DWG. S20.702

METAL COVER SECURED TO GUSSET
PLATE

SEAM FLASHING

LINES OF CURVED BEAM BELOW

2 A20.701

GUSSET PLATE DETAIL

SCALE 1 1/2" = 1'-0"

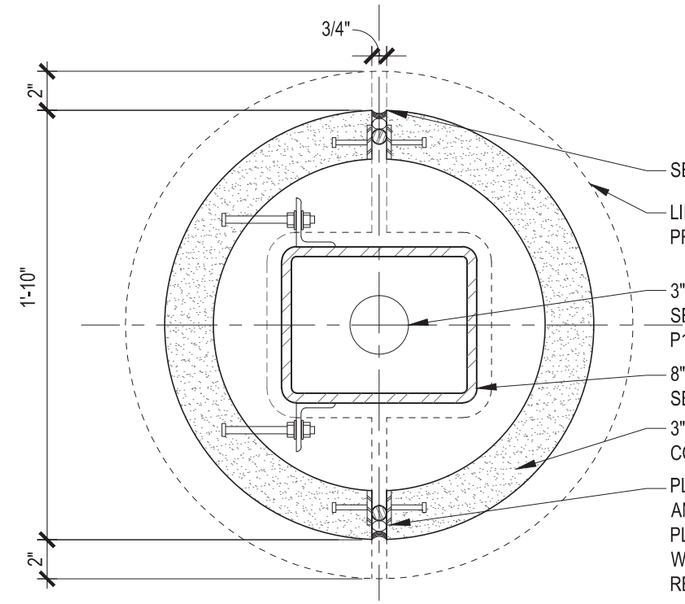

SEALANT AND BACKER ROD

LINE OF 2'-2" DIA.
PRECAST CONCRETE CAP ABOVE

3" DIA. BUILT-IN DOWN SPOUT,
SEE PLUMBING DWGS.
P14, P15, P17.203

8"X10" STEEL COLUMN,
SEE STRUCTURAL DWG. S20.702

3" PRECAST CONCRETE
COLUMN COVER

PLATE CAST IN COLUMN COVER
AND PROVIDE STEEL BAR OR
PLATE AS SHOWN FOR FIELD
WELDING, PER MANUFACTURE
REQUIREMENTS

1 A20.701

PRECAST CONC. COLUMN COVER DETAIL

SCALE 1 1/2" = 1'-0"

NOTICE: THE OFFICIAL RECORD OF THIS SHEET IS THE ELECTRONIC FILE SIGNED AND SEALED UNDER RULE 61G1-16.005, F.A.C.

REVISIONS					
DATE	BY	DESCRIPTION	DATE	BY	DESCRIPTION

MICHEAL K. CHATHAM, AIA FLORIDA AR 13635

HELMAN HURLEY CHARVAT PEACOCK / ARCHITECTS, INC.

120 North Orange Ave Orlando, FL 32801
P: 407 644 2656 F: 407 628 3269 www.HHCP.com
AA C000326

STATE OF FLORIDA
DEPARTMENT OF TRANSPORTATION

ROAD NO.	COUNTY	FINANCIAL PROJECT ID
CFRC P2S	VARIOUS	423446-9-52-01

CENTRAL FLORIDA COMMUTER RAIL TRANSIT (CFCRT) PHASE 2, SOUTH

CANOPY "A" DETAILS

SHEET NO. 139

DRAWING NO.
A20.705

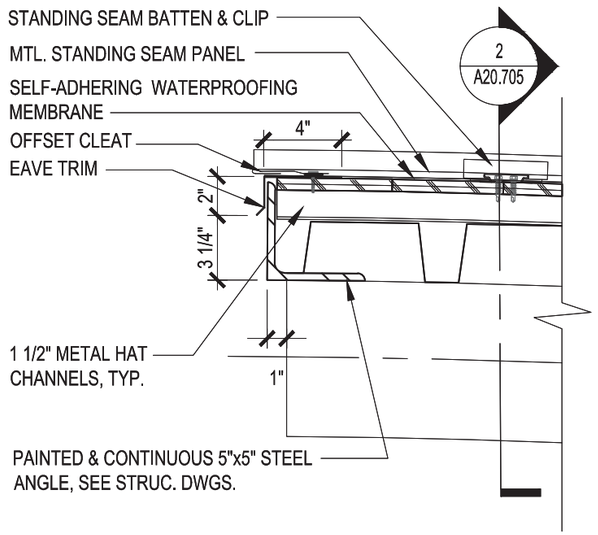

5 A20.705 ROOF DETAIL AT EAVE
SCALE 1 1/2" = 1'-0"

CONTRACTOR NOTE:
STANDING SEAM ROOFING AND PLYWOOD ROOF SHEATHING SHALL BE SECURED TO THE METAL HAT CHANNELS ONLY. INTENT OF HAT CHANNELS IS TO ENSURE NO EXPOSED LONG SCREW FASTENERS PENETRATE STRUCTURAL METAL DECK. TYPICAL, SEE DETAIL 5/A20.794

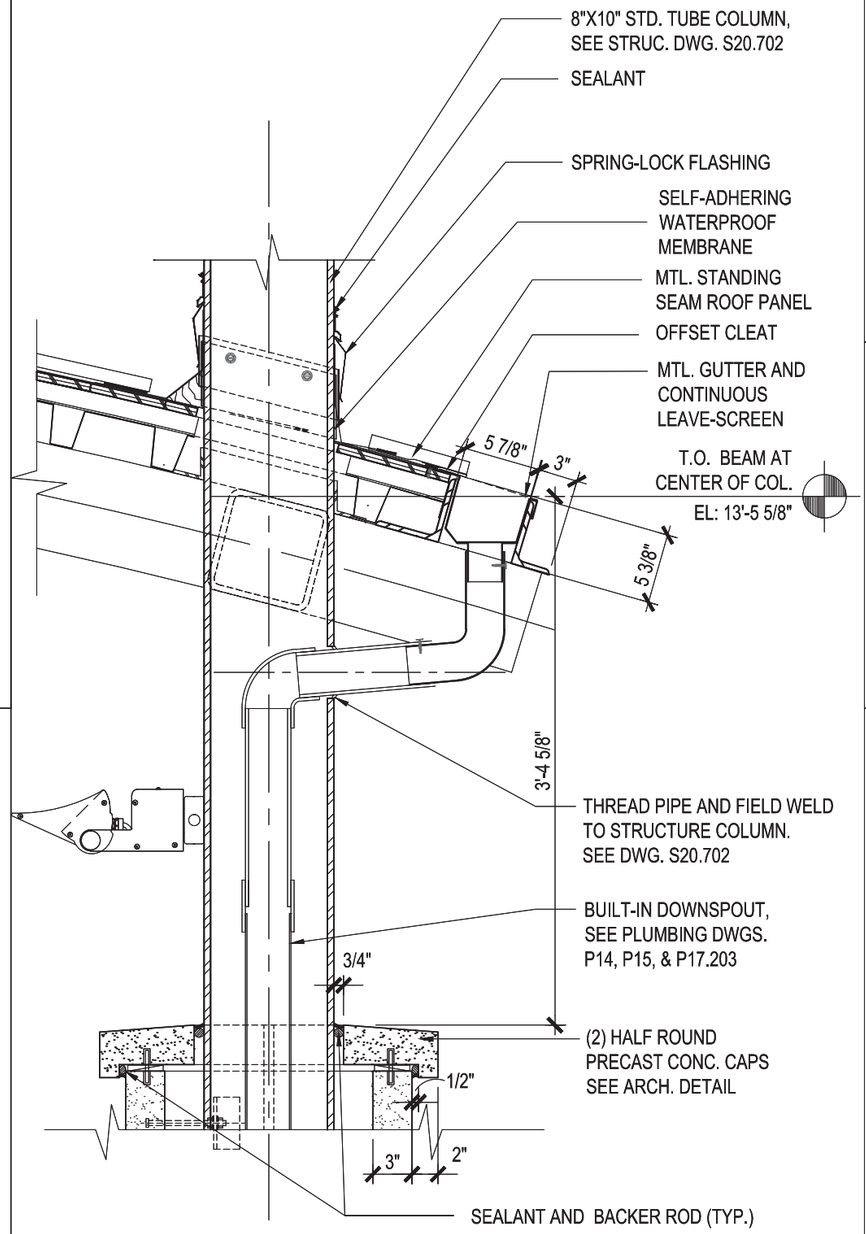

3 A20.705 ENLARGED SECTION DETAIL
SCALE 1" = 1'-0"

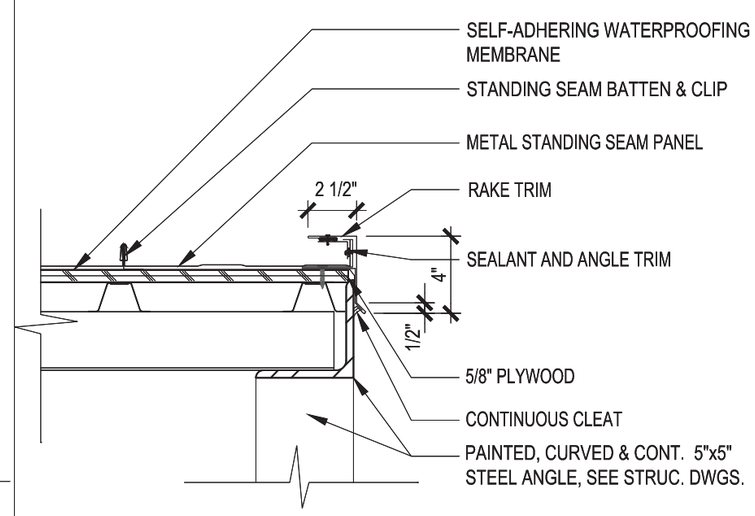

2 A20.705 ROOF DETAIL AT RAKE
SCALE 1 1/2" = 1'-0"

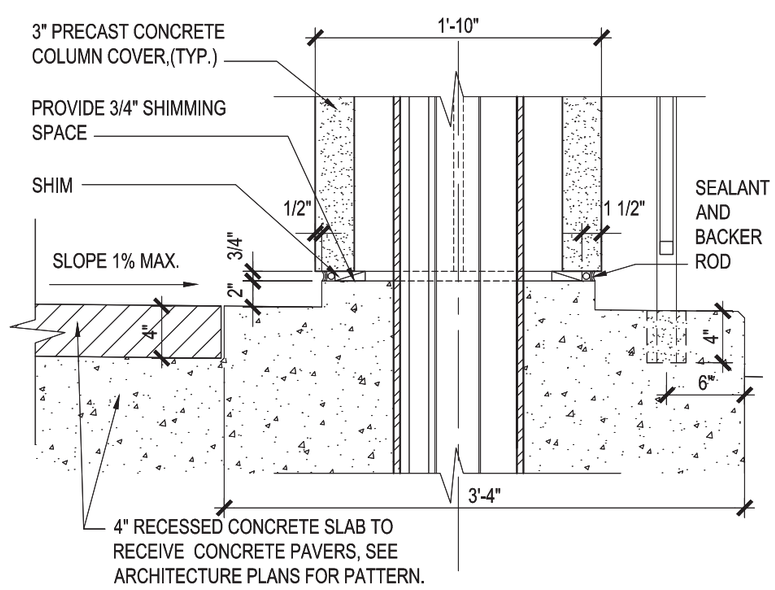

1 A20.705 CONCRETE BASE DETAIL
SCALE 1" = 1'-0"

NOTICE: THE OFFICIAL RECORD OF THIS SHEET IS THE ELECTRONIC FILE SIGNED AND SEALED UNDER RULE 61G1-16.005, F.A.C.

REVISIONS					
DATE	BY	DESCRIPTION	DATE	BY	DESCRIPTION

MICHEAL K. CHATHAM, AIA FLORIDA AR 13635
HELMAN HURLEY CHARVAT PEACOCK / ARCHITECTS, INC.
120 North Orange Ave Orlando, FL 32801
P: 407 644 2656 F: 407 628 3269 www.HHCP.com
AA C000338

STATE OF FLORIDA
DEPARTMENT OF TRANSPORTATION

ROAD NO.	COUNTY	FINANCIAL PROJECT ID
CFRC P2S	VARIOUS	423446-9-52-01

CENTRAL FLORIDA COMMUTER RAIL TRANSIT (CFCRT) PHASE 2 SOUTH

CANOPY "A" DETAIL SECTIONS

SHEET NO. 140

DRAWING NO.
A20.764

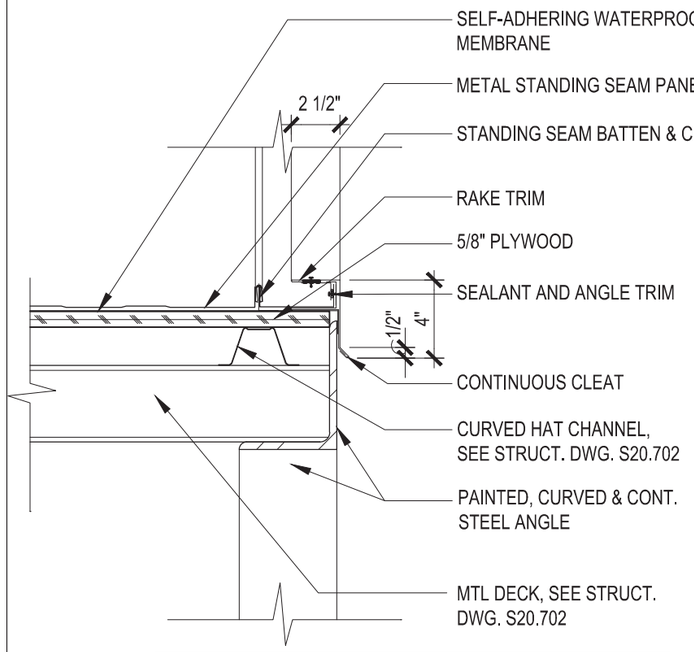

CONTRACTOR NOTE:
STANDING SEAM ROOFING AND PLYWOOD ROOF SHEATHING SHALL BE SECURED TO THE METAL HAT CHANNELS ONLY. INTENT OF HAT CHANNELS IS TO ENSURE NO EXPOSED LONG SCREW FASTENERS PENETRATE STRUCTURAL METAL DECK. TYPICAL, SEE DETAIL 5/A20.794

3 A20.764 SECTION DETAIL AT RAKE
SCALE 1 1/2" = 1'-0"
(CANOPY 'A')

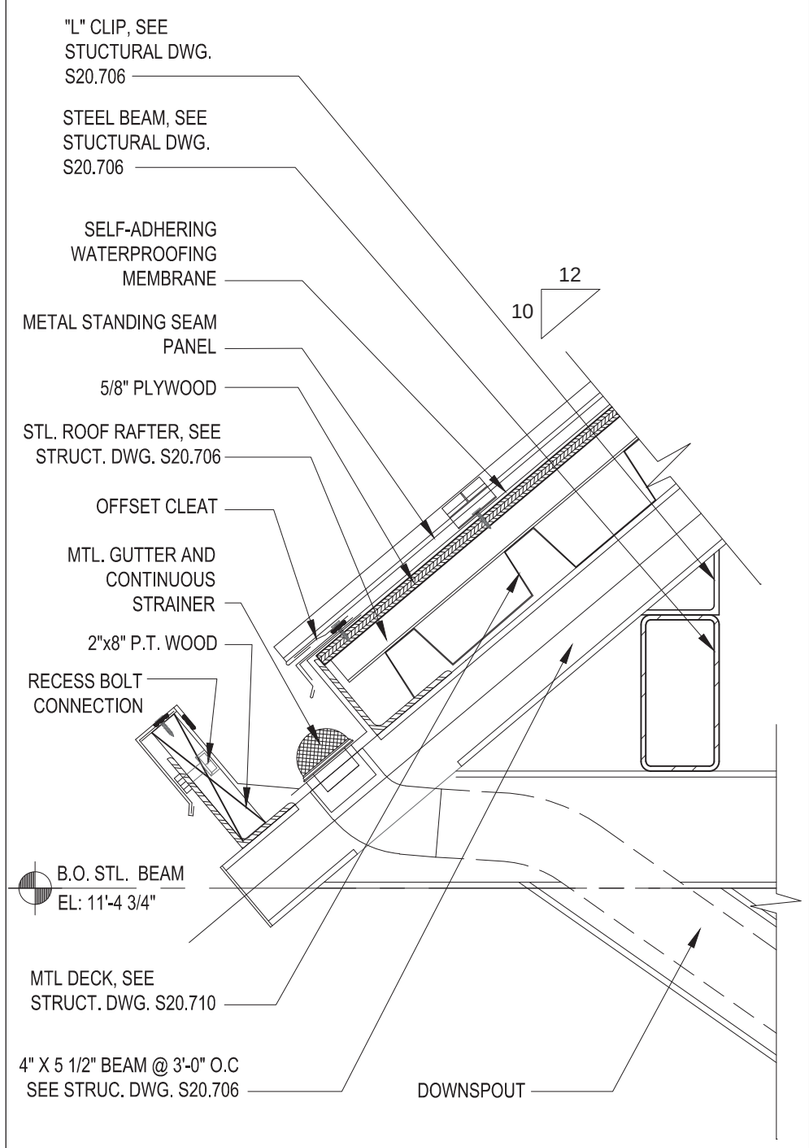

2 A20.764 ROOF DETAIL AT GUTTER
SCALE 1 1/2" = 1'-0"
(CANOPY 'F')

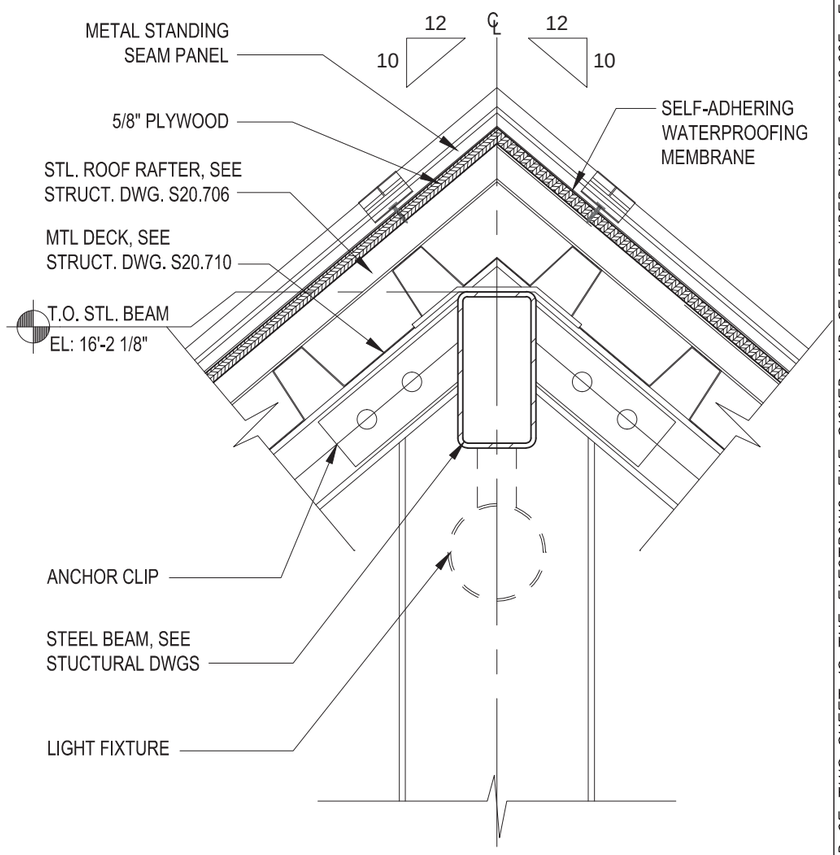

1 A20.764 ROOF DETAIL AT RIDGE CAP
SCALE 1 1/2" = 1'-0"
(CANOPY 'F')

NOTICE: THE OFFICIAL RECORD OF THIS SHEET IS THE ELECTRONIC FILE SIGNED AND SEALED UNDER RULE 61G1-16.005, F.A.C.

REVISIONS					
DATE	BY	DESCRIPTION	DATE	BY	DESCRIPTION

MICHEAL K. CHATHAM, AIA FLORIDA AR 13635
HELMAN HURLEY CHARVAT PEACOCK / ARCHITECTS, INC.
120 North Orange Ave Orlando, FL 32801
P: 407 644 2656 F: 407 628 3269 www.HHCP.com

STATE OF FLORIDA
DEPARTMENT OF TRANSPORTATION

ROAD NO.	COUNTY	FINANCIAL PROJECT ID
CFRC P2S	VARIOUS	423446-9-52-01

CENTRAL FLORIDA COMMUTER RAIL TRANSIT (CFCRT) PHASE 2, SOUTH

CANOPY "F"
DETAIL SECTIONS

SHEET NO.
141

05/06/2015 3:19pm S:\Domestic\258018 Phase 2 South and VSLMF\05 PRODUCTION\AutoCAD HHCP\Sheet Files\STATION-DETAIL SHEETS\A20.764.dwg,A20-764

DRAWING NO.
A20.765

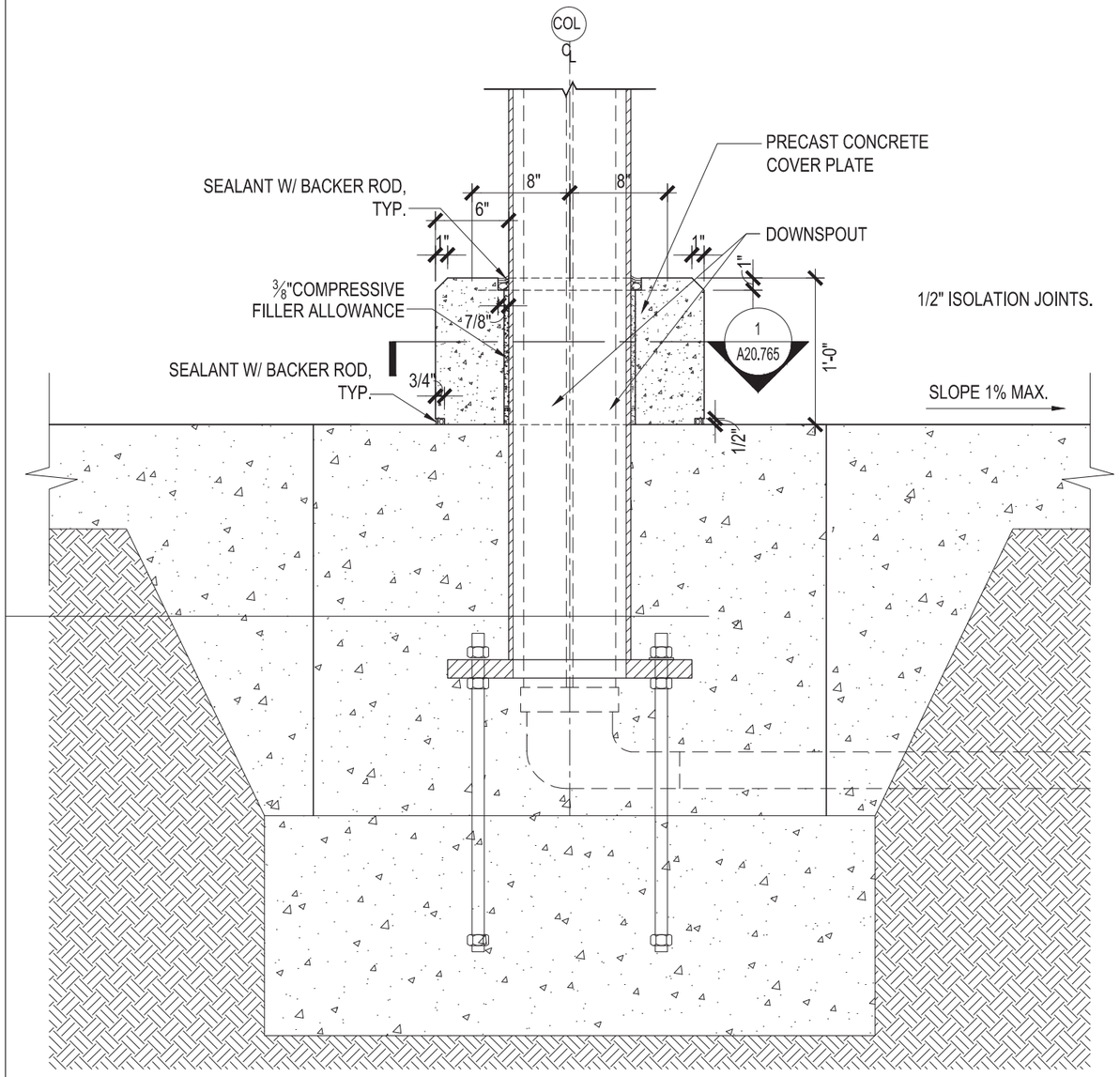

2 A20.765 **CONCRETE BASE DETAIL**
SCALE 1" = 1'-0"

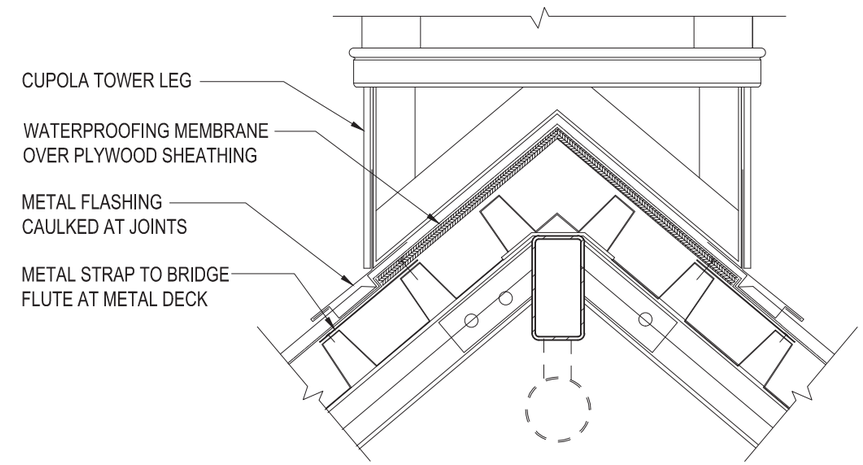

3 A20.765 **CUPOLA DETAIL**
SCALE 1" = 1'-0"

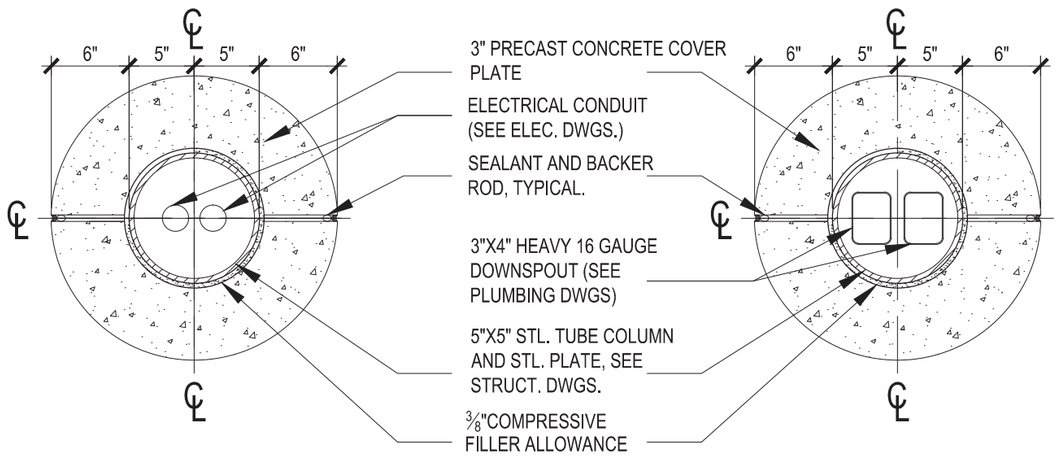

1 A20.765 **COLUMN PLAN DETAIL** (CONDUIT & DOWNSPOUT)
SCALE 1" = 1'-0"

NOTICE: THE OFFICIAL RECORD OF THIS SHEET IS THE ELECTRONIC FILE SIGNED AND SEALED UNDER RULE 61G1-16.005, F.A.C.

REVISIONS					
DATE	BY	DESCRIPTION	DATE	BY	DESCRIPTION

MICHEAL K. CHATHAM, AIA FLORIDA AR 13635

HELMAN HURLEY CHARVAT PEACOCK / ARCHITECTS, INC.

120 North Orange Ave Orlando, FL 32801
P: 407 644 2656 F: 407 628 3269 www.HHCP.com
AA C000338

STATE OF FLORIDA
DEPARTMENT OF TRANSPORTATION

ROAD NO.	COUNTY	FINANCIAL PROJECT ID
CFRC P2S	OSCEOLA	423446-9-52-01

CENTRAL FLORIDA COMMUTER RAIL TRANSIT (CFCRT) PHASE 2 SOUTH

CANOPY "F"
DETAIL SECTIONS

SHEET NO. 142

DRAWING NO.
A20.766

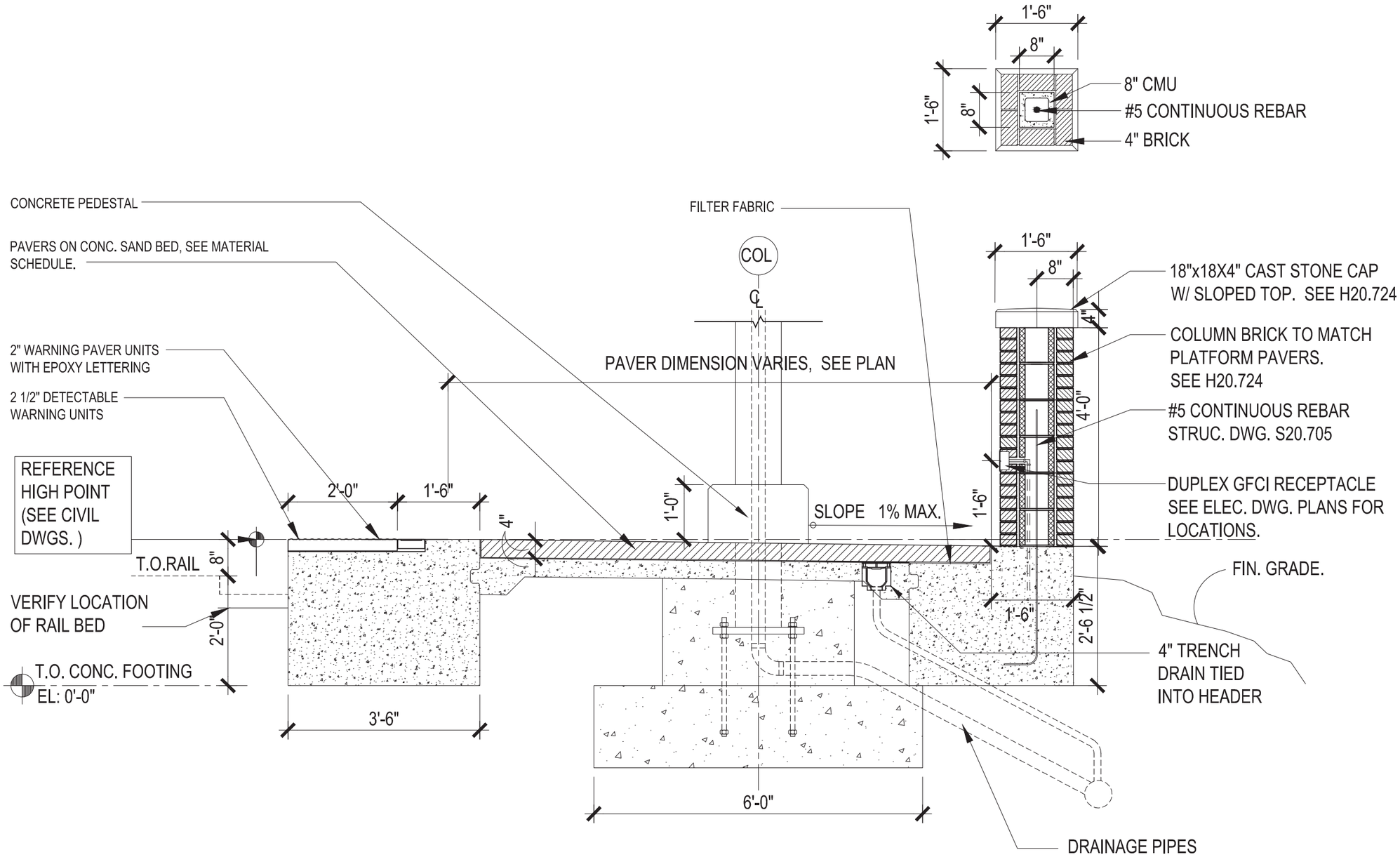

1
A20.766

PLATFORM SECTION AT PAVERS

SCALE 1/2" = 1'-0"

NOTICE: THE OFFICIAL RECORD OF THIS SHEET IS THE ELECTRONIC FILE SIGNED AND SEALED UNDER RULE 61G1-16.005, F.A.C.

REVISIONS					
DATE	BY	DESCRIPTION	DATE	BY	DESCRIPTION

MICHEAL K. CHATHAM, AIA FLORIDA AR 13635

HELMAN HURLEY CHARVAT PEACOCK / ARCHITECTS, INC.
120 North Orange Ave Orlando, FL 32801
P: 407 644 2656 F: 407 628 3269 www.HHCP.com
[redacted]

STATE OF FLORIDA
DEPARTMENT OF TRANSPORTATION

ROAD NO.	COUNTY	FINANCIAL PROJECT ID
CFRC P2S	OSCEOLA	423446-9-52-01

CENTRAL FLORIDA COMMUTER RAIL TRANSIT (CFCRT) PHASE 2, SOUTH

CANOPY "F" - PLATFORM SECTIONS - KISSIMMEE STATION

SHEET NO.
143

05/06/2015 3:22pm S:\Domestic\258018 Phase 2 South and VSLMF\05 PRODUCTION\AutoCAD HHCP\Sheet Files\STATION-DETAIL SHEETS\A20.766.dwg,A20-766

DRAWING NO.
A20.767

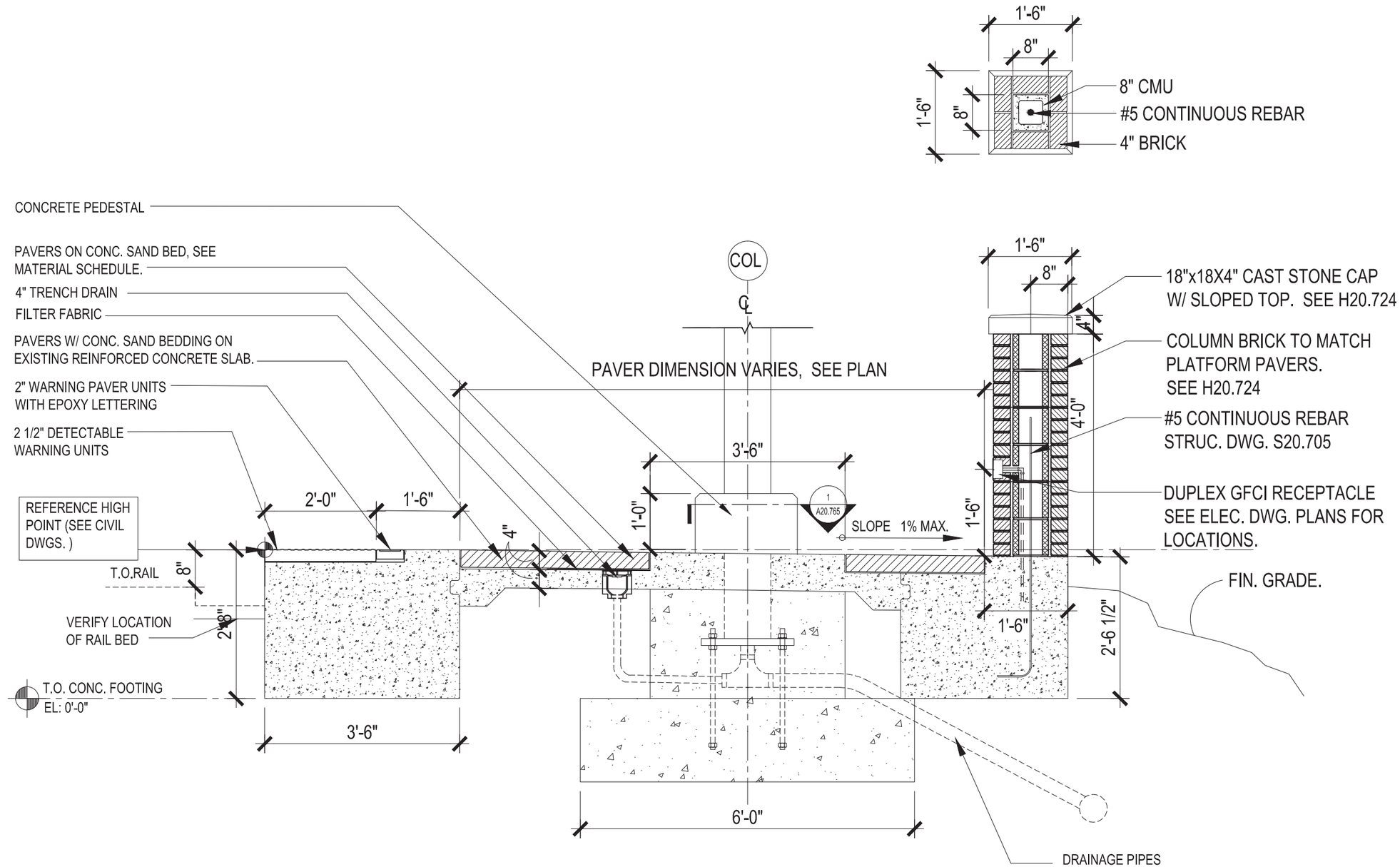

1
A20.767

PLATFORM SECTION AT PAVERS

SCALE 1/2" = 1'-0"

NOTICE: THE OFFICIAL RECORD OF THIS SHEET IS THE ELECTRONIC FILE SIGNED AND SEALED UNDER RULE 61G1-16.005, F.A.C.

REVISIONS					
DATE	BY	DESCRIPTION	DATE	BY	DESCRIPTION

MICHEAL K. CHATHAM, AIA FLORIDA AR 13635

HELMAN HURLEY CHARVAT PEACOCK / ARCHITECTS, INC.

120 North Orange Ave Orlando, FL 32801
P: 407 644 2656 F: 407 628 3269 www.HHCP.com

STATE OF FLORIDA
DEPARTMENT OF TRANSPORTATION

ROAD NO.	COUNTY	FINANCIAL PROJECT ID
CFRC P2S	OSCEOLA	423446-9-52-01

CENTRAL FLORIDA COMMUTER RAIL TRANSIT (CFCRT) PHASE 2, SOUTH

CANOPY "F" - PLATFORM SECTIONS - KISSIMMEE STATION

SHEET NO.
144

05/06/2015 3:24pm S:\Domestic\258018 Phase 2 South and VSLMF\05 PRODUCTION\AutoCAD HHCP\Sheet Files\STATION-DETAIL SHEETS\A20.767.dwg,A20-767

DRAWING NO.
A20.790

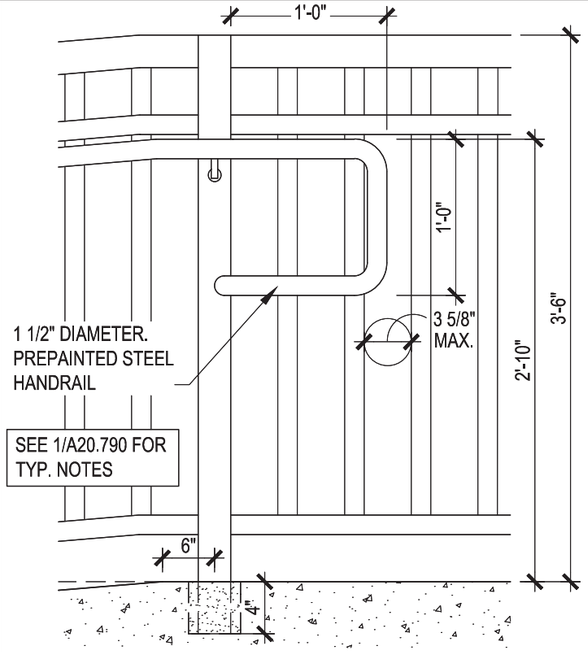

8 A20.790 **GUARDRAIL/HANDRAIL DETAIL-RH1**
SCALE 1 " = 1'-0"

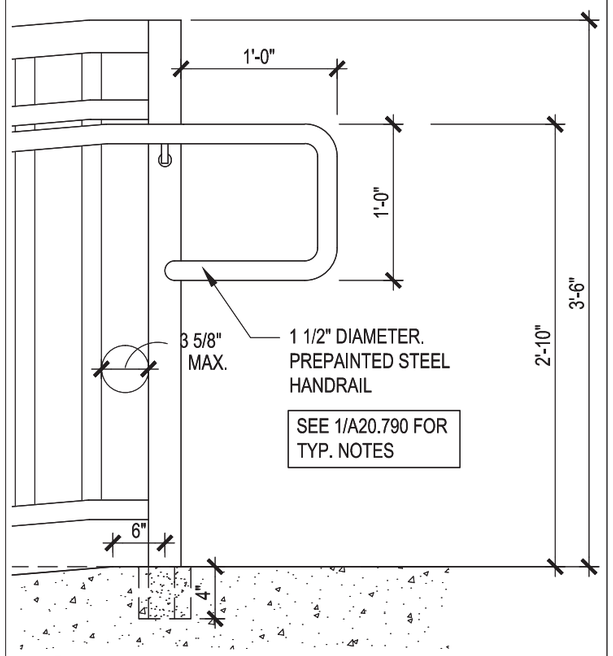

7 A20.790 **GUARDRAIL/HANDRAIL DETAIL**
SCALE 1 " = 1'-0"

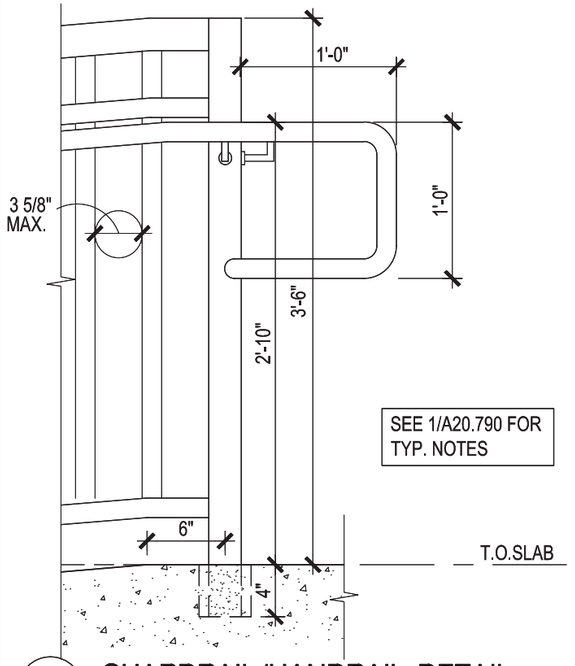

6 A20.790 **GUARDRAIL/HANDRAIL DETAIL**
SCALE 1 " = 1'-0"

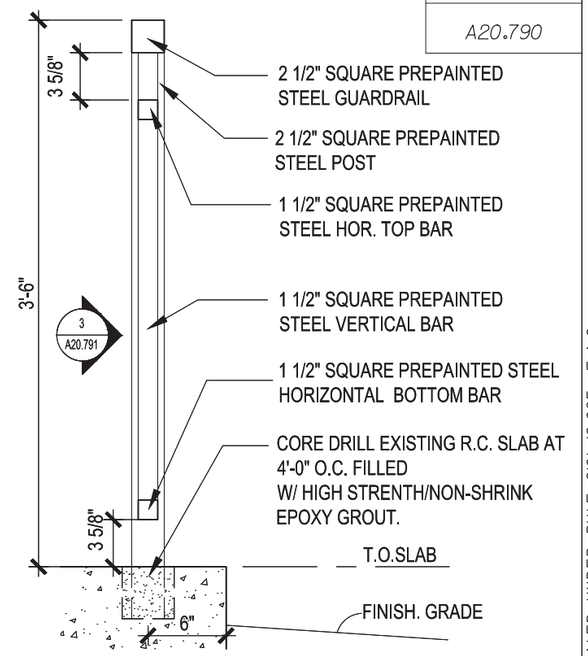

5 A20.790 **GUARDRAIL DETAIL-R1**
SCALE 1 " = 1'-0"

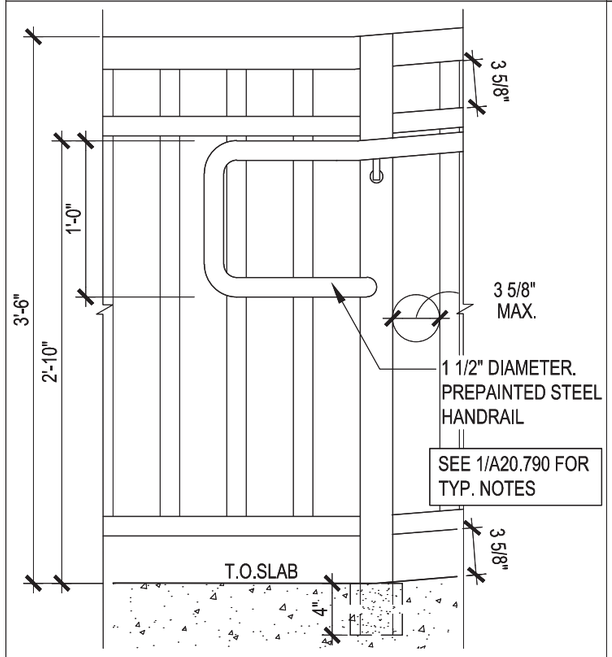

4 A20.790 **GUARDRAIL/HANDRAIL DETAIL**
SCALE 1 " = 1'-0"

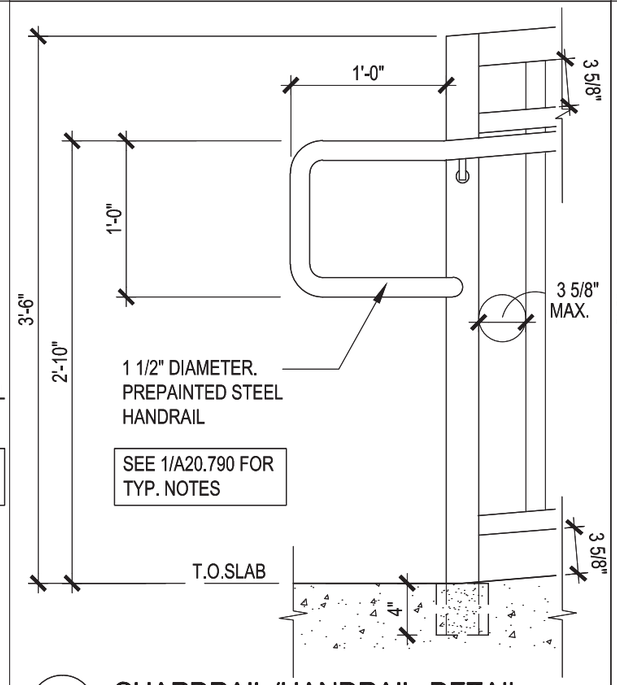

3 A20.790 **GUARDRAIL/HANDRAIL DETAIL**
SCALE 1 " = 1'-0"

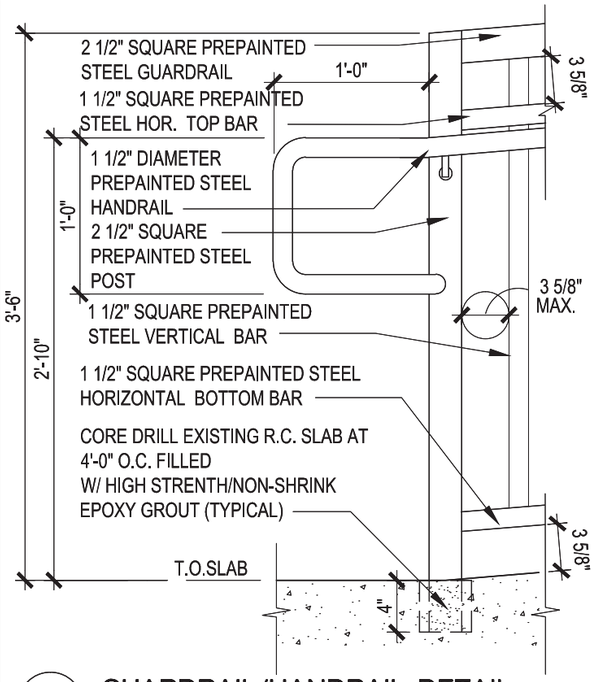

2 A20.790 **GUARDRAIL/HANDRAIL DETAIL**
SCALE 1 " = 1'-0"

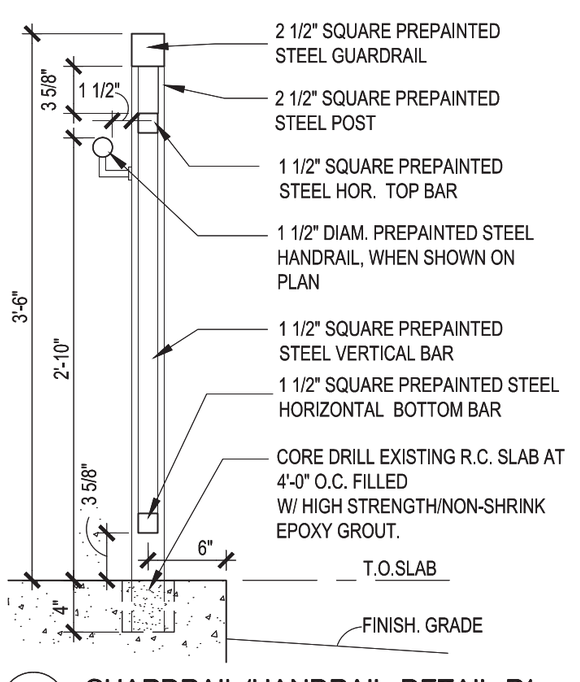

1 A20.790 **GUARDRAIL/HANDRAIL DETAIL-R1**
SCALE 1 " = 1'-0"

NOTICE: THE OFFICIAL RECORD OF THIS SHEET IS THE ELECTRONIC FILE SIGNED AND SEALED UNDER RULE 61G1-16.005, F.A.C.

REVISIONS

DATE	BY	DESCRIPTION	DATE	BY	DESCRIPTION

MICHEAL K. CHATHAM, AIA FLORIDA AR 13635

HELMAN HURLEY CHARVAT PEACOCK / ARCHITECTS, INC.
120 North Orange Ave Orlando, FL 32801
P: 407 644 2656 F: 407 628 3269 www.HHCP.com
AA C000538

STATE OF FLORIDA
DEPARTMENT OF TRANSPORTATION

ROAD NO.	COUNTY	FINANCIAL PROJECT ID
CFRC P2S	VARIOUS	423446-9-52-01

CENTRAL FLORIDA COMMUTER RAIL TRANSIT (CFCRT) PHASE 2 SOUTH

GUARDRAIL / HANDRAIL DETAILS

SHEET NO. 145

SEE PLAN FOR HANDRAIL EXTENSION CONDITION

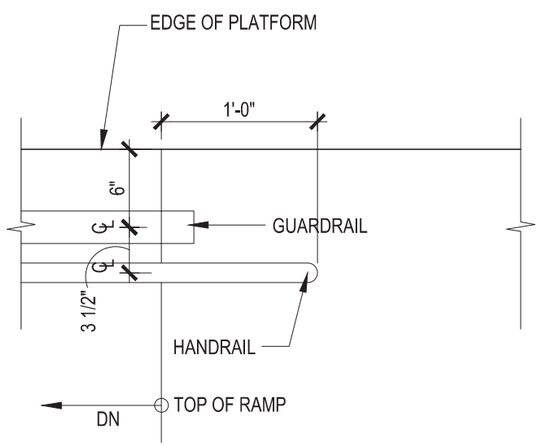

5 A20.791 **PLAN AT TOP OF RAMP** (AT PLATFORM)
SCALE 1 " = 1'-0"

SEE PLAN FOR HANDRAIL EXTENSION CONDITION

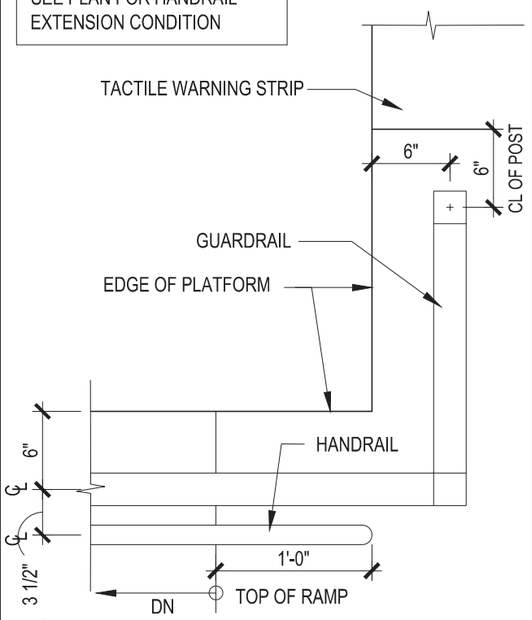

4 A20.791 **PLAN AT TOP OF RAMP**
SCALE 1 " = 1'-0"

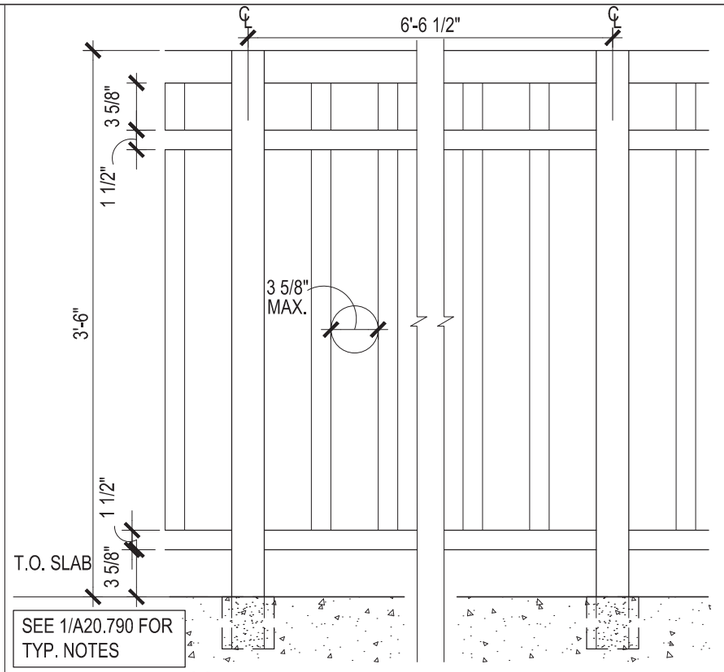

SEE 1/A20.790 FOR TYP. NOTES

3 A20.791 **TYP. GUARDRAIL ELEVATION** (R-1, SEE MATERIAL SCHEDULE)
SCALE 1 " = 1'-0"

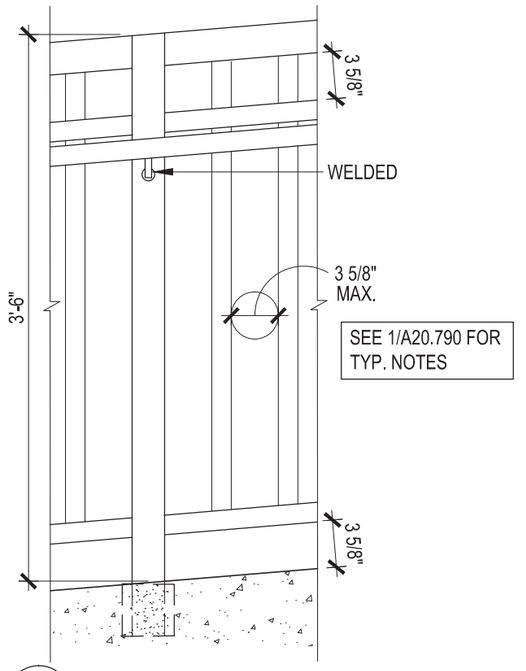

SEE 1/A20.790 FOR TYP. NOTES

2 A20.791 **GUARDRAIL/HANDRAIL DETAIL**
SCALE 1 " = 1'-0"

NOTICE: THE OFFICIAL RECORD OF THIS SHEET IS THE ELECTRONIC FILE SIGNED AND SEALED UNDER RULE 61G1-16.005, F.A.C.

REVISIONS

DATE	BY	DESCRIPTION	DATE	BY	DESCRIPTION

MICHEAL K. CHATHAM, AIA FLORIDA AR 13635
HELMAN HURLEY CHARVAT PEACOCK / ARCHITECTS, INC.
120 North Orange Ave Orlando, FL 32801
P: 407 644 2656 F: 407 628 3269 www.HHCP.com
AA C000338

STATE OF FLORIDA
DEPARTMENT OF TRANSPORTATION

ROAD NO.	COUNTY	FINANCIAL PROJECT ID
CFRC P2S	VARIOUS	423446-9-52-01

CENTRAL FLORIDA COMMUTER RAIL TRANSIT (CFCRT) PHASE 2, SOUTH

GUARDRAIL / HANDRAIL DETAILS

SHEET NO. 146

DRAWING NO.
A20.794

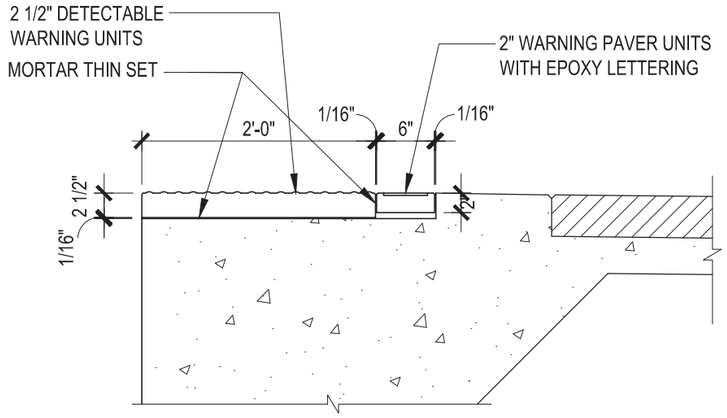

6 A20.794 **DETECTABLE WARING PAVER DETAIL**
3/4"=1'-0"

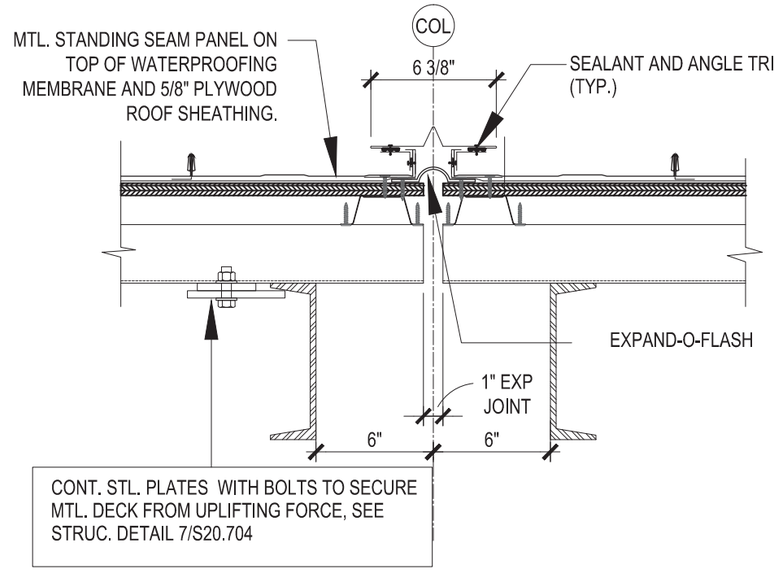

4 A20.794 **EXPANSION JOINT DETAIL FOR CANOPY F**
1 1/2"=1'-0"

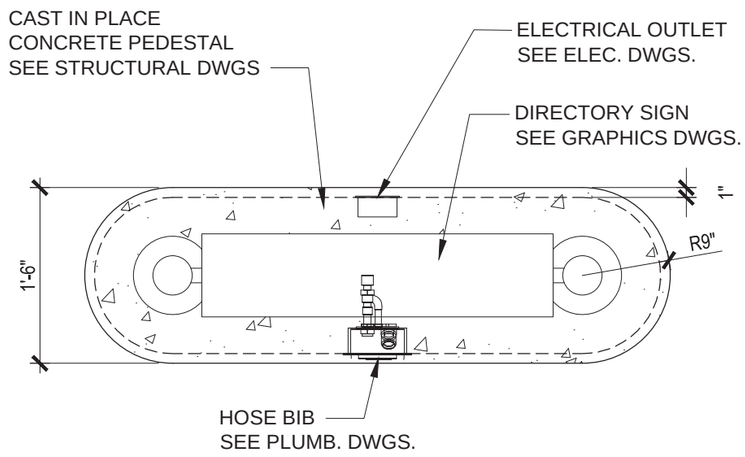

2 A20.794 **DIRECTORY WITH CIP PEDESTAL**
3/4"=1'-0"

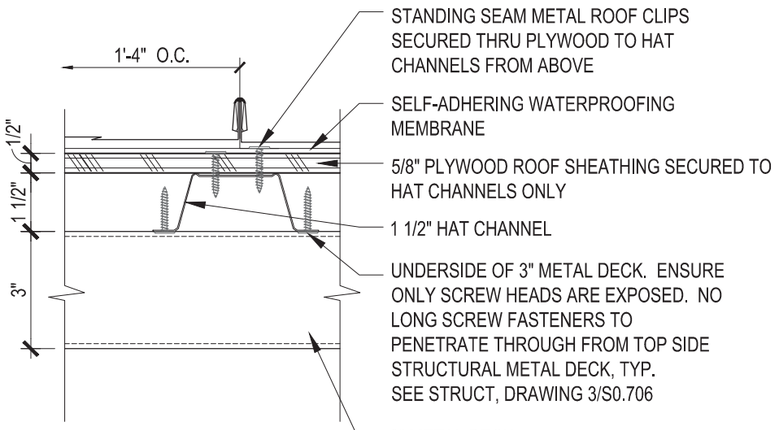

5 A20.794 **ROOF ANCHOR DETAIL**
3"=1'-0"

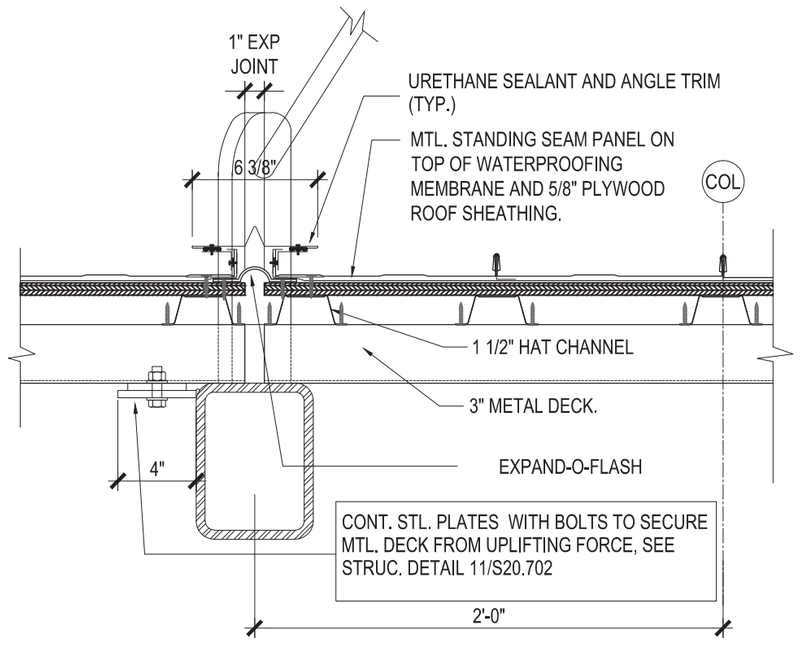

3 A20.794 **EXPANSION JOINT DETAIL FOR CANOPY A**
1 1/2"=1'-0"

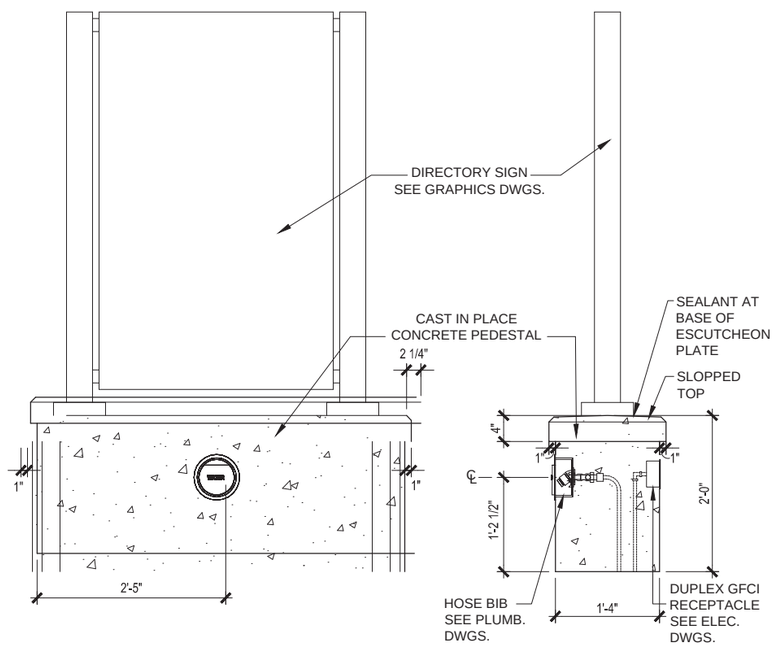

1 A20.794 **DIRECTORY WITH CIP PEDESTAL**
1/2"=1'-0"

NOTICE: THE OFFICIAL RECORD OF THIS SHEET IS THE ELECTRONIC FILE SIGNED AND SEALED UNDER RULE 61G1-16.005, F.A.C.

REVISIONS					
DATE	BY	DESCRIPTION	DATE	BY	DESCRIPTION

MICHEAL K. CHATHAM, AIA FLORIDA AR 13635

HELMAN HURLEY CHARVAT PEACOCK / ARCHITECTS, INC.

120 North Orange Ave Orlando, FL 32801
P: 407 644 2656 F: 407 628 3269 www.HHCP.com
AA C000338

STATE OF FLORIDA
DEPARTMENT OF TRANSPORTATION

ROAD NO.	COUNTY	FINANCIAL PROJECT ID
CFRC P2S	VARIOUS	423446-9-52-01

CENTRAL FLORIDA COMMUTER RAIL TRANSIT (CFCRT) PHASE 2 SOUTH

MISCELLANEOUS DETAILS

SHEET NO. 147

DRAWING NO.
S00.001

TABLE 1 - DESIGN LOADS

LIVE LOAD (ROOF)		DEAD LOAD (ROOF)	
CANOPY A	20 PSF	CANOPY A	8 PSF
CANOPY F	12 PSF	CANOPY F	12 PSF

WIND LOAD (ALL CANOPIES)

ULTIMATE BASIC WIND SPEED (3 SEC. GUST)	140 MPH	EXPOSURE C	
BUILDING CATEGORY	II	GCpi = 0	(OPEN STRUCTURE)
q_h (VELOCITY PRESSURE)	36.2 PSF		

ULTIMATE MWFRS PRESSURES AT VERTICAL SURFACES (ALL CANOPIES)

EFFECTIVE AREA	POSITIVE	NEGATIVE
ALL EFFECTIVE AREAS	24.0 PSF	-24.0 PSF

ULTIMATE COMPONENTS AND CLADDING PRESSURES AT VERTICAL SURFACES (ALL CANOPIES)

EFFECTIVE AREA	POSITIVE	NEGATIVE
ALL EFFECTIVE AREAS (COLUMN COVERS ETC.)	36.2 PSF	-50.7 PSF

TABLE 2 - ROOF PRESSURES

COMPONENTS AND CLADDING PRESSURES AT ROOF (CANOPY A)

TYPE OF COMPONENT (EFFECTIVE AREA)	ZONE 1		ZONE 2		ZONE 3	
	POSITIVE	NEGATIVE	POSITIVE	NEGATIVE	POSITIVE	NEGATIVE
ROOFING (1 SF)	N/A	N/A	78.2 PSF	-68.5 PSF	115.8 PSF	-152.0 PSF
DECK (5 SF)	N/A	N/A	78.2 PSF	-68.5 PSF	115.8 PSF	-152.0 PSF
FRAMES (> 100 SF)	N/A	N/A	52.2 PSF	-45.6 PSF	52.2 PSF	-45.6 PSF

COMPONENTS AND CLADDING PRESSURES AT ROOF (CANOPY F)

TYPE OF COMPONENT (EFFECTIVE AREA)	ZONE 1		ZONE 2		ZONE 3	
	POSITIVE	NEGATIVE	POSITIVE	NEGATIVE	POSITIVE	NEGATIVE
ROOFING (1 SF)	N/A	N/A	N/A	N/A	79.6 PSF	-57.9 PSF
DECK (5 SF)	N/A	N/A	N/A	N/A	79.6 PSF	-57.9 PSF
FRAMES (> 100 SF)	N/A	N/A	N/A	N/A	39.8 PSF	-29.0 PSF

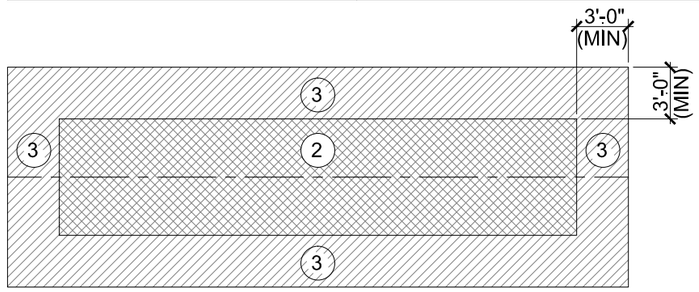

ROOF WIND PRESSURE ZONE PLAN
FOR CANOPY TYPE "A"
SCALE: N.T.S.

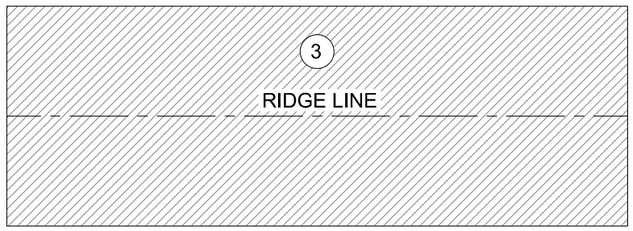

ROOF WIND PRESSURE ZONE PLAN
FOR CANOPY TYPE "F"
SCALE: N.T.S.

NOTICE: THE OFFICIAL RECORD OF THIS SHEET IS THE ELECTRONIC FILE SIGNED AND SEALED UNDER RULE 61G15-23.003, F.A.C.

REVISIONS					
DATE	BY	DESCRIPTION	DATE	BY	DESCRIPTION

McElroyEngineering
STRUCTURAL DESIGN GROUP
1835 EDGEWATER DR. ORLANDO, FL. 32804
P: 407.245.8775 | F: 407.245.8744
www.mcelroyeng.com
CERTIFICATE OF AUTHORIZATION - 8822
CRAIG E. McELROY, P.E. NO. 44741

STATE OF FLORIDA
DEPARTMENT OF TRANSPORTATION

ROAD NO.	COUNTY	FINANCIAL PROJECT ID
CFRC P2S	VARIOUS	423446-9-52-01

CENTRAL FLORIDA COMMUTER RAIL TRANSIT (CFCRT) PHASE 2 SOUTH

DESIGN LOADS

SHEET NO.
148

Wed, 13 May 2015 12:13 pm N:\AECOM\391101 CFCRT Phase 2 Amendment #5\DWGS\00_General\391101_S00.001.dwg

FOOTING SCHEDULE

TYPE	SIZE			REINFORCEMENT (BOTTOM U.N.O.)	REMARKS
	WIDTH	LENGTH	DEPTH		
6.0x6.0	6'-0"	6'-0"	1'-6"	(8) #6 x 5'-6" LG BARS EACH WAY TOP & BOTTOM	SEE "1/S20.601" FOR ADD'L INFORMATION
6.0x8.5	6'-0"	8'-6"	1'-6"	(8) #6 x 8'-0" LG BARS LW AND (12) #6 x 5'-6" LG BARS SW TOP & BOTTOM	SEE "1/S20.606" FOR ADD'L INFORMATION
4.0C	4'-0"	CONT	1'-4"	(5) CONT #5 LW AND #5 x 3'-6" LG AT 12" O.C. SW BOTTOM	SEE "5/S20.704" FOR ADD'L INFORMATION

GRADE BEAM SCHEDULE

TYPE	SIZE			REINFORCEMENT		REMARKS
	WIDTH	LENGTH	DEPTH	LONGITUDINAL	STIRRUPS	
GB1	3'-6"	-	2'-5-1/2"	(5) #5 BARS T & B W/ (2) #5 BARS SIDE - (1) EACH SIDE	#4 TYPE 1 AT 18" O.C.	SEE "1/S20.601" & "1/S20.602" FOR ADD'L INFORMATION
GB2	3'-4"	-	2'-6-1/2"	(5) #5 BARS T & B W/ (2) #5 BARS SIDE - (1) EACH SIDE	#4 TYPE 1 AT 18" O.C.	SEE "1/S20.601" & "1/S20.602" FOR ADD'L INFORMATION
GB3	3'-0"	-	2'-8" HP 2'-5-1/2" LP	(4) #5 BARS T & B W/ (2) #5 BARS SIDE - (1) EACH SIDE	#4 TYPE 1 AT 18" O.C.	SEE "5/S20.704" FOR ADD'L INFORMATION
GB4	5'-11" SEE SECTION	-	3'-6" SEE SECTION	(8) #5 BARS T & B W/ (5) #5 BARS SIDE	#4 TYPE 1 & #4 TYPE 2 AT 18" O.C.	SEE "1/S20.605" FOR ADD'L INFORMATION
GB5	3'-4"	-	3'-8-1/2"	(5) #5 BARS T & B W/ (4) #5 BARS SIDE - (2) EACH SIDE	#4 TYPE 1 AT 18" O.C.	
GB6	3'-0"	-	3'-10" HP 3'-7-1/2" LP	(4) #5 BARS T & B W/ (4) #5 BARS SIDE - (2) EACH SIDE	#4 TYPE 1 AT 18" O.C.	SEE "1/S20.601" FOR ADD'L INFORMATION
GB7	3'-6"	-	2'-5-1/2"	(5) #5 BARS T & B W/ (2) #5 BARS SIDE - (1) EACH SIDE	#4 TYPE 1 AT 18" O.C.	SEE "1/S20.606" FOR ADD'L INFORMATION
GB8	1'-6"	-	2'-6-1/2"	(2) #7 BARS T & B W/ (2) #5 BARS SIDE - (1) EACH SIDE	#3 TYPE 3 AT 18" O.C.	SEE "1/S20.607" FOR ADD'L INFORMATION
GB9	4'-2"	-	2'-6-1/2"	(6) #5 BARS T & B W/ (2) #5 BARS SIDE - (1) EACH SIDE	#4 TYPE 1 AT 18" O.C.	SEE "1/S20.608" FOR ADD'L INFORMATION
GB10	3'-0"	-	VARIES	(4) #5 BARS T & B W/ (2) #5 BARS SIDE - (1) EACH SIDE	#4 TYPE 1 AT 18" O.C.	SEE "1/S20.606" FOR ADD'L INFORMATION
GB11	1'-6"	-	VARIES	(3) #5 BARS T & B W/ (2) #5 BARS SIDE - (1) EACH SIDE	#3 TYPE 1 AT 18" O.C.	
GB12	2'-0"	-	2'-6-1/2"	(3) #5 BARS T & B W/ (2) #5 BARS SIDE - (1) EACH SIDE	#4 TYPE 3 AT 18" O.C.	
GB13	1'-6"	-	2'-8" HP 2'-5-1/2" LP	(3) #5 BARS T & B W/ (2) #5 BARS SIDE - (1) EACH SIDE	#3 TYPE 1 AT 18" O.C.	

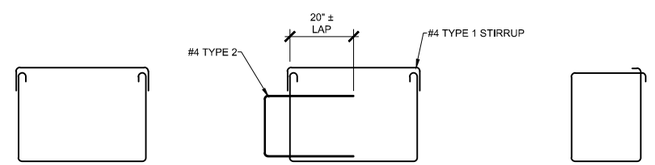

STIRRUPS TYPES

NOTICE: THE OFFICIAL RECORD OF THIS SHEET IS THE ELECTRONIC FILE SIGNED AND SEALED UNDER RULE 61G15-23.003, F.A.C.

REVISIONS					
DATE	BY	DESCRIPTION	DATE	BY	DESCRIPTION

McElroyEngineering
STRUCTURAL DESIGN GROUP
1835 EDGEWATER DR. ORLANDO, FL. 32804
P: 407.245.8775 | F: 407.245.8744
www.mcelroyeng.com
CERTIFICATE OF AUTHORIZATION - 8822
CRAIG E. McELROY, P.E. NO. 44741

STATE OF FLORIDA
DEPARTMENT OF TRANSPORTATION

ROAD NO.	COUNTY	FINANCIAL PROJECT ID
CFRC P2S	VARIOUS	423446-9-52-01

CENTRAL FLORIDA COMMUTER RAIL TRANSIT (CFCRT) PHASE 2 SOUTH

FOUNDATION SCHEDULES

SHEET NO. 150

DRAWING NO.
S00.005

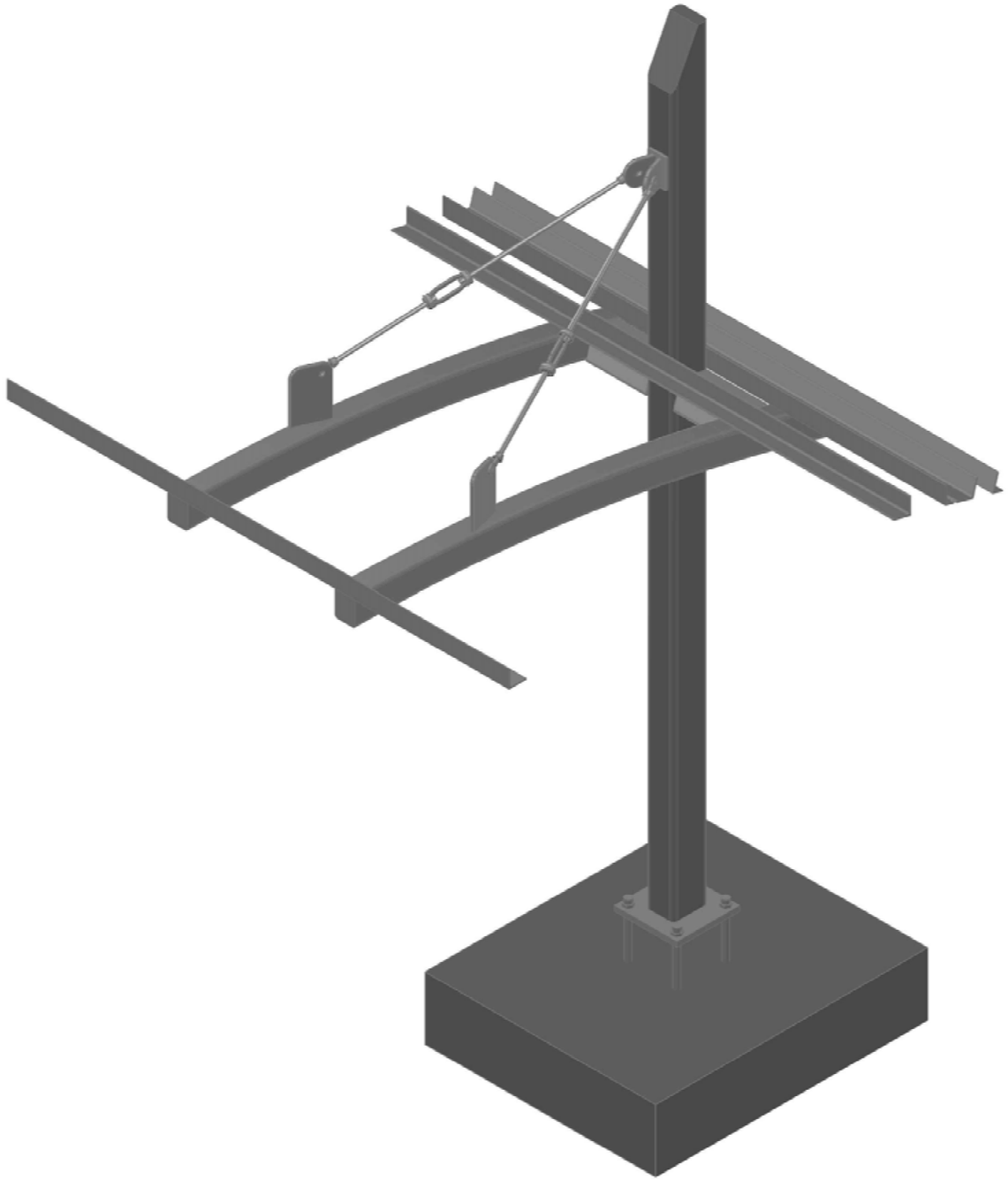

NOTICE: THE OFFICIAL RECORD OF THIS SHEET IS THE ELECTRONIC FILE SIGNED AND SEALED UNDER RULE 61G15-23.003, F.A.C.

REVISIONS					
DATE	BY	DESCRIPTION	DATE	BY	DESCRIPTION

McElroyEngineering
STRUCTURAL DESIGN GROUP
1835 EDGEWATER DR. ORLANDO, FL. 32804
P: 407.245.8775 | F: 407.245.8744
www.mcelroyeng.com
CERTIFICATE OF AUTHORIZATION - 8822
CRAIG E. McELROY, P.E. NO. 44741

STATE OF FLORIDA
DEPARTMENT OF TRANSPORTATION

ROAD NO.	COUNTY	FINANCIAL PROJECT ID
CFRC P2S	VARIOUS	423446-9-52-01

CENTRAL FLORIDA COMMUTER RAIL TRANSIT (CFCRT) PHASE 2 SOUTH

3D VIEW - CANOPY A

SHEET NO.
152

DRAWING NO.

S00.006

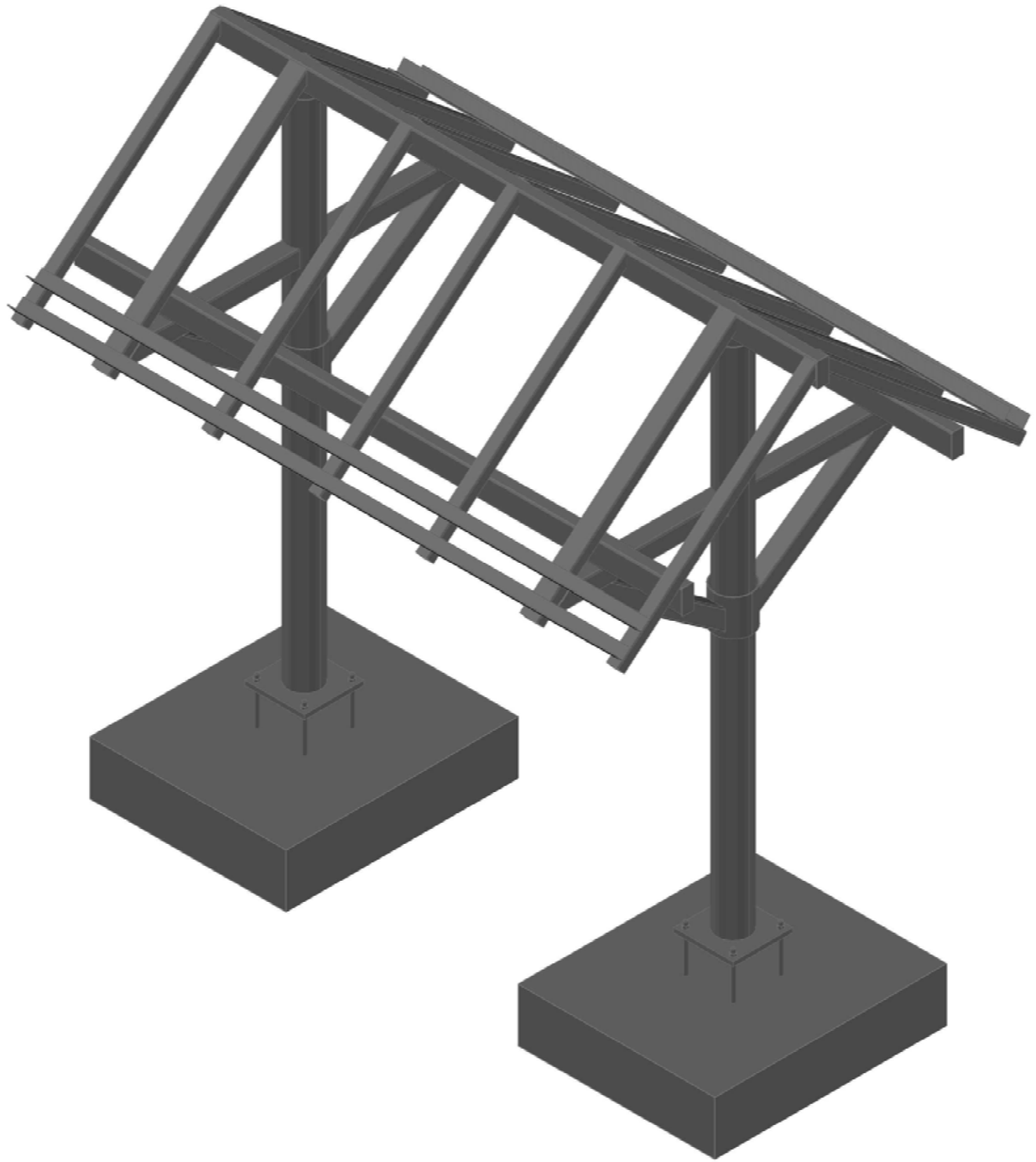

NOTICE: THE OFFICIAL RECORD OF THIS SHEET IS THE ELECTRONIC FILE SIGNED AND SEALED UNDER RULE 61G15-23.003, F.A.C.

REVISIONS					
DATE	BY	DESCRIPTION	DATE	BY	DESCRIPTION

McElroyEngineering LLC
STRUCTURAL DESIGN GROUP
1835 EDGEWATER DR. ORLANDO, FL. 32804
P: 407.245.8775 | F: 407.245.8744
www.mcelroyeng.com
CERTIFICATE OF AUTHORIZATION - 8822
CRAIG E. McELROY, P.E. NO. 44741

STATE OF FLORIDA
DEPARTMENT OF TRANSPORTATION

ROAD NO.	COUNTY	FINANCIAL PROJECT ID
CFRC P2S	OSCEOLA	423446-9-52-01

CENTRAL FLORIDA COMMUTER RAIL TRANSIT (CFCRT) PHASE 2 SOUTH

3D VIEW - CANOPY F

SHEET NO.

153

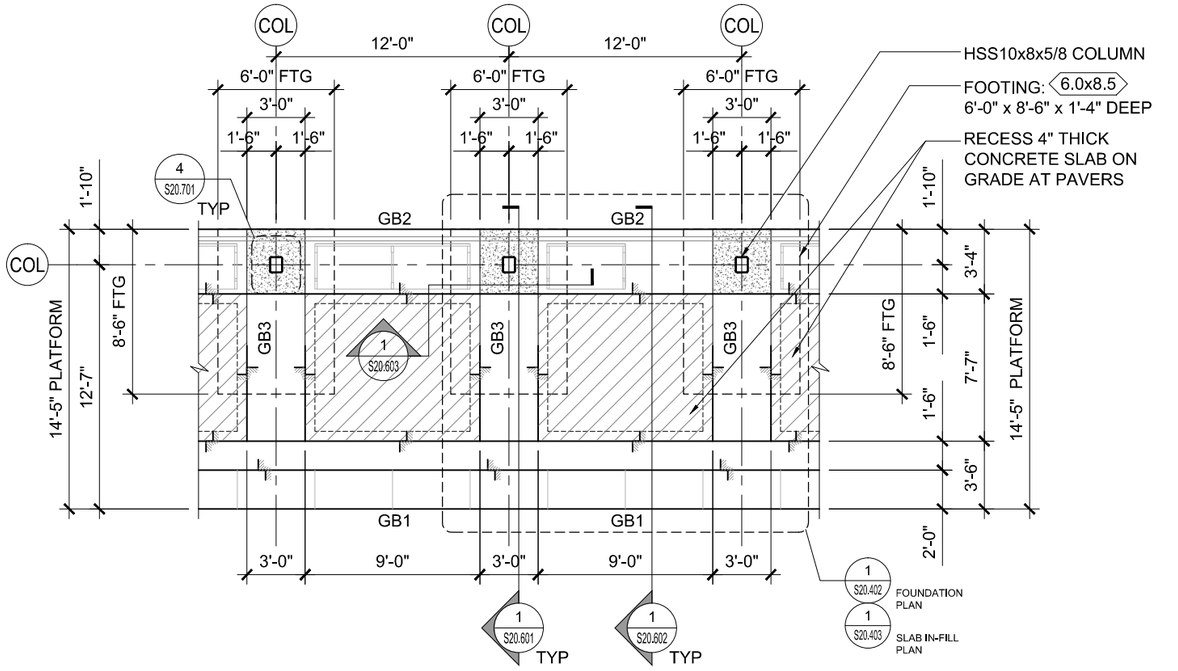

PARTIAL FOUNDATION PLAN AT CANOPY "A"

SCALE: 1/8"=1'-0"

1 S20.401

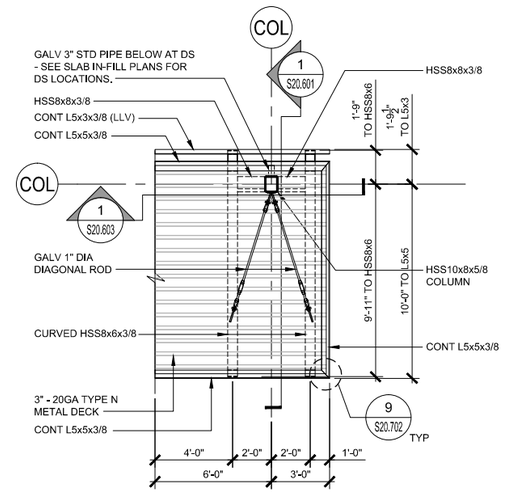

PARTIAL ROOF FRAMING PLAN AT END OF CANOPY "A"

SCALE: 1/8"=1'-0"

3 S20.401

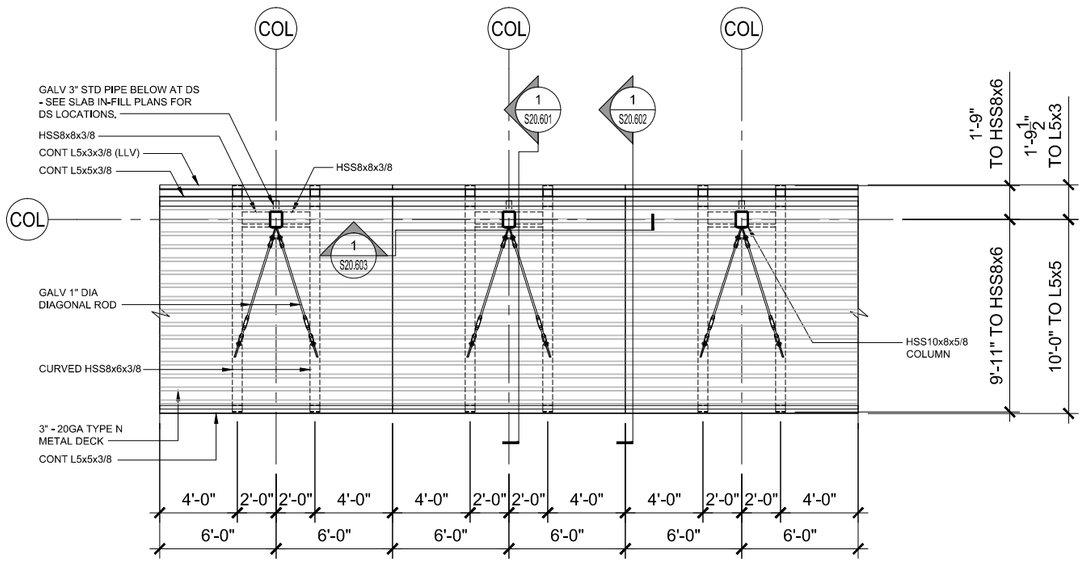

PARTIAL ROOF FRAMING PLAN AT CANOPY "A"

SCALE: 1/8"=1'-0"

2 S20.401

STEEL PENETRATION NOTES:

1. SEE ARCHITECTURAL AND MEP DRAWINGS FOR CONDUIT AND PLUMBING PENETRATIONS THRU COLUMNS AND OTHER STRUCTURES. ALL PENETRATIONS MUST BE INCLUDED IN THE STRUCTURAL STEEL SUBMITTAL FOR REVIEW. CONTRACTOR MUST COORDINATE WITH ALL TRADES AND VERIFY THE SIZE AND LOCATION OF ALL OPENINGS IN THE STRUCTURE PRIOR TO FABRICATION.
2. SEE ARCHITECTURAL AND SIGNAGE DRAWINGS FOR CONNECTION PLATE REQUIREMENTS AT PRE-MANUFACTURED SIGNS. PLATE SIZE, LOCATION AND FASTENERS FOR ALL SIGNAGE CONNECTIONS MUST BE INCLUDED IN THE STRUCTURAL STEEL SUBMITTAL FOR REVIEW. CONTRACTOR MUST COORDINATE AND VERIFY CONNECTION PLATE SIZE AND LOCATION PRIOR TO FABRICATION.

NOTICE: THE OFFICIAL RECORD OF THIS SHEET IS THE ELECTRONIC FILE SIGNED AND SEALED UNDER RULE 61G15-23.003, F.A.C.

REVISIONS					
DATE	BY	DESCRIPTION	DATE	BY	DESCRIPTION

McElroyEngineering
STRUCTURAL DESIGN GROUP
1835 EDGEWATER DR. ORLANDO, FL. 32804
P: 407.245.8775 | F: 407.245.8744
www.mcelroyeng.com
CERTIFICATE OF AUTHORIZATION - 8822
CRAIG E. McELROY, P.E. NO. 44741

STATE OF FLORIDA
DEPARTMENT OF TRANSPORTATION

ROAD NO.	COUNTY	FINANCIAL PROJECT ID
CFRC P2S	VARIOUS	423446-9-52-01

CENTRAL FLORIDA COMMUTER RAIL TRANSIT (CFCRT) PHASE 2 SOUTH

ENLARGED PLANS

SHEET NO. 154

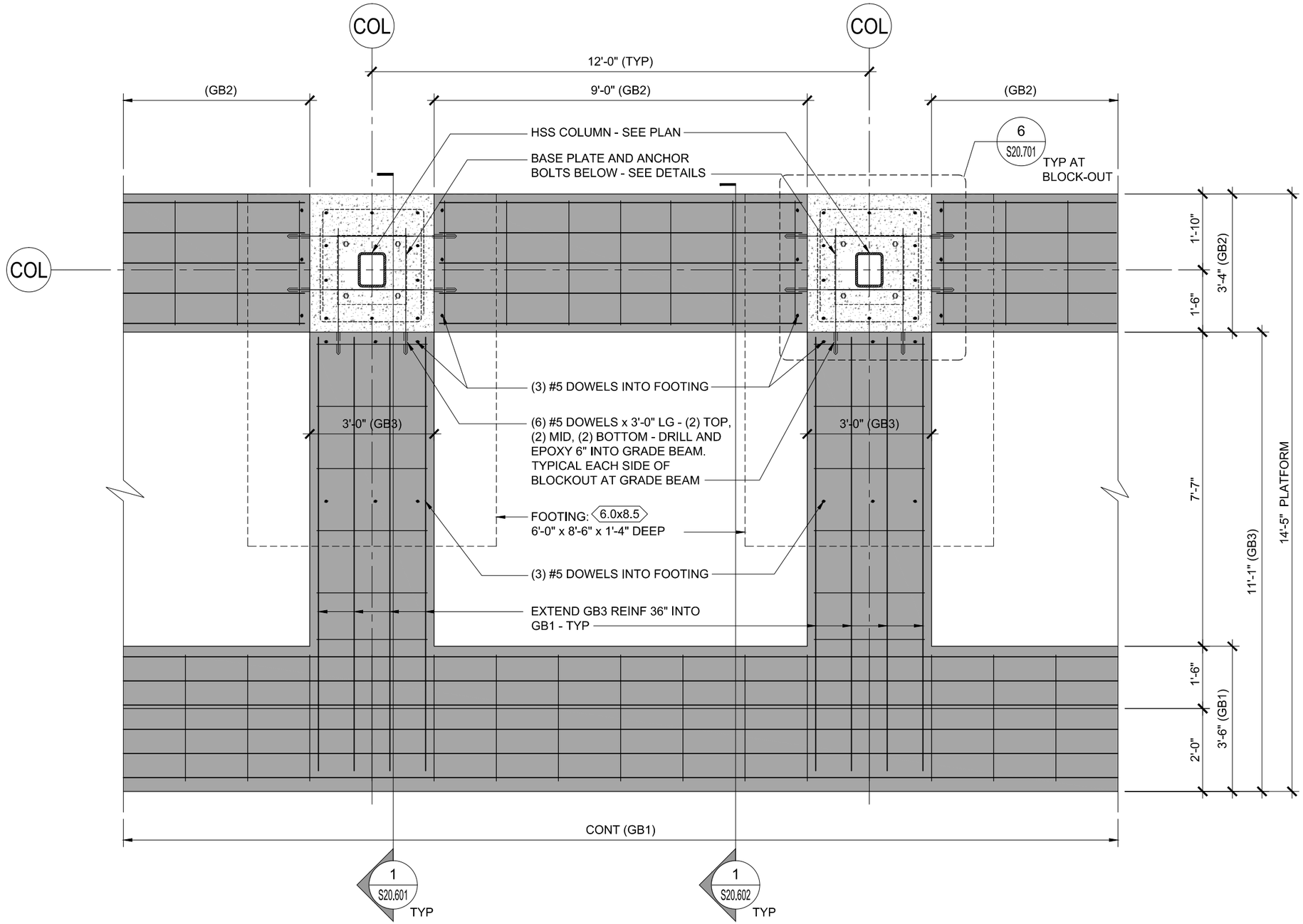

ENLARGED PARTIAL FOUNDATION PLAN AT CANOPY TYPE "A"

SCALE: 3/8"=1'-0"

1
S20.402

REVISIONS					
DATE	BY	DESCRIPTION	DATE	BY	DESCRIPTION

McElroyEngineering
STRUCTURAL DESIGN GROUP
1835 EDGEWATER DR. ORLANDO, FL. 32804
P: 407.245.8775 | F: 407.245.8744
www.mcelroyeng.com
CERTIFICATE OF AUTHORIZATION - 8822
CRAIG E. McELROY, P.E. NO. 44741

STATE OF FLORIDA
DEPARTMENT OF TRANSPORTATION

ROAD NO.	COUNTY	FINANCIAL PROJECT ID
CFRC P2S	VARIOUS	423446-9-52-01

CENTRAL FLORIDA COMMUTER RAIL TRANSIT (CFCRT) PHASE 2 SOUTH

ENLARGED PLANS

SHEET NO.
155

NOTICE: THE OFFICIAL RECORD OF THIS SHEET IS THE ELECTRONIC FILE SIGNED AND SEALED UNDER RULE 61G15-23.003, F.A.C.

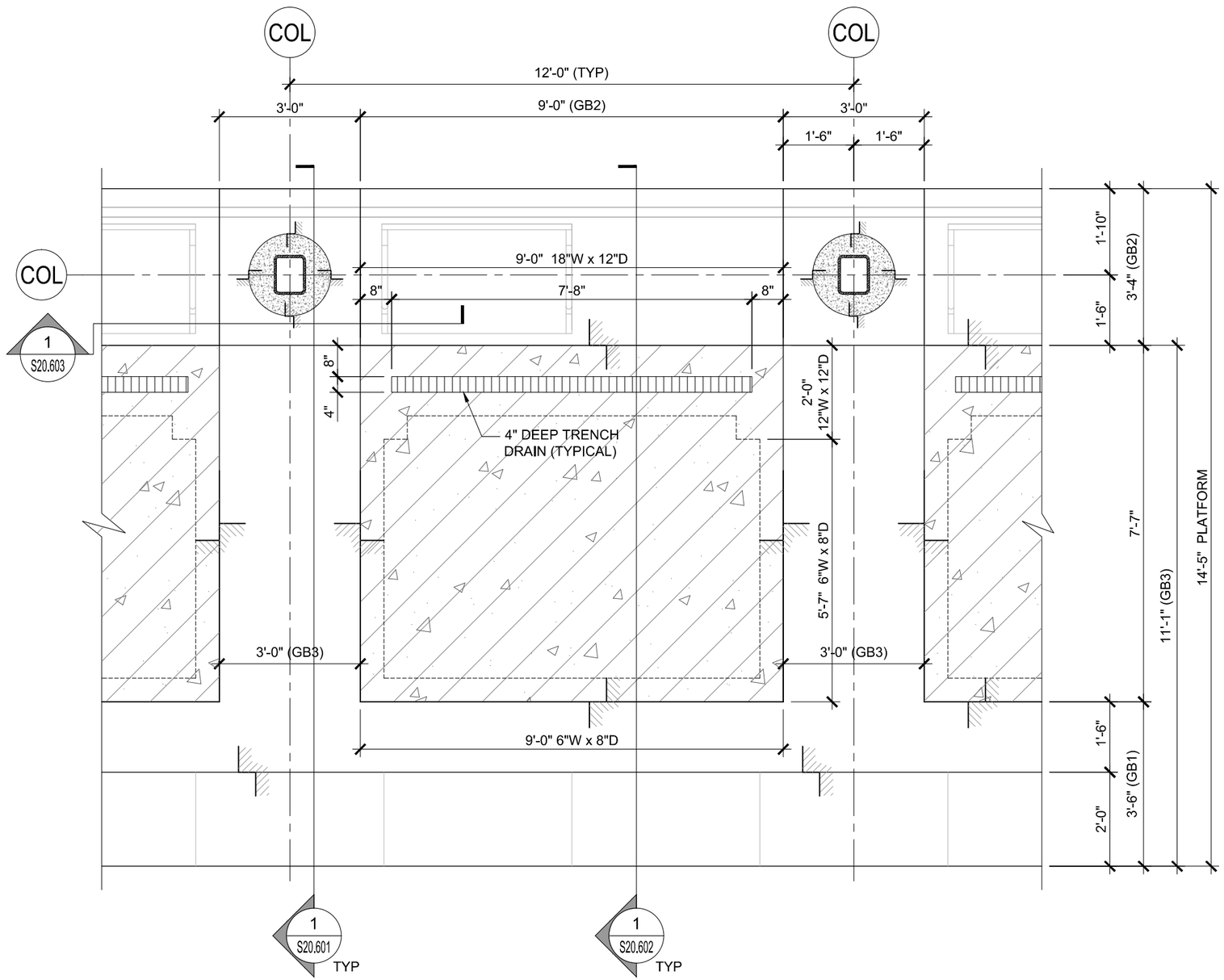

ENLARGED PARTIAL SLAB IN-FILL PLAN - CANOPY TYPE "A"

SCALE: 3/8"=1'-0"

1 S20.403

REVISIONS					
DATE	BY	DESCRIPTION	DATE	BY	DESCRIPTION

McElroyEngineering
STRUCTURAL DESIGN GROUP
1835 EDGEWATER DR. ORLANDO, FL. 32804
P: 407.245.8775 | F: 407.245.8744
www.mcelroyeng.com
CERTIFICATE OF AUTHORIZATION - 8822
CRAIG E. McELROY, P.E. NO. 44741

STATE OF FLORIDA
DEPARTMENT OF TRANSPORTATION

ROAD NO.	COUNTY	FINANCIAL PROJECT ID
CFRC P2S	VARIOUS	423446-9-52-01

CENTRAL FLORIDA COMMUTER RAIL TRANSIT (CFCRT) PHASE 2 SOUTH

ENLARGED PLANS

SHEET NO. 156

NOTICE: THE OFFICIAL RECORD OF THIS SHEET IS THE ELECTRONIC FILE SIGNED AND SEALED UNDER RULE 61G15-23.003, F.A.C.

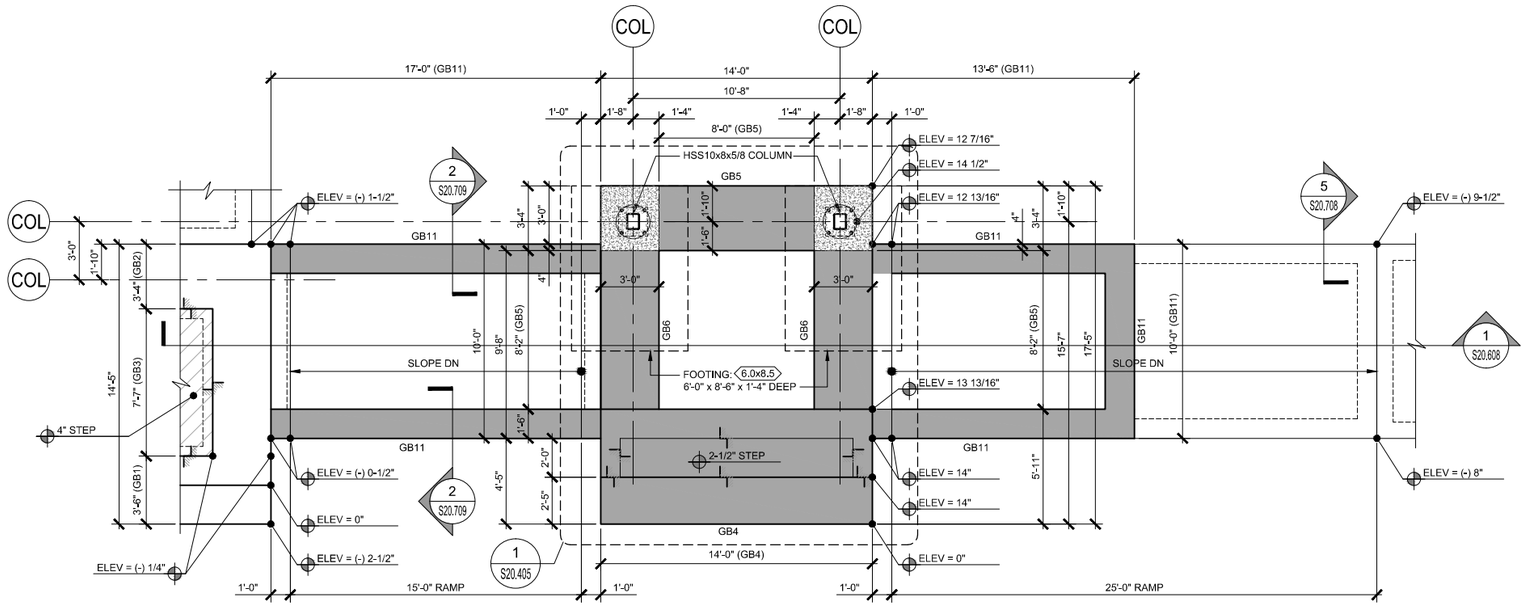

PARTIAL FOUNDATION PLAN AT CANOPY "A" MINI HIGH

SCALE: 1/8"=1'-0"

1 S20.404

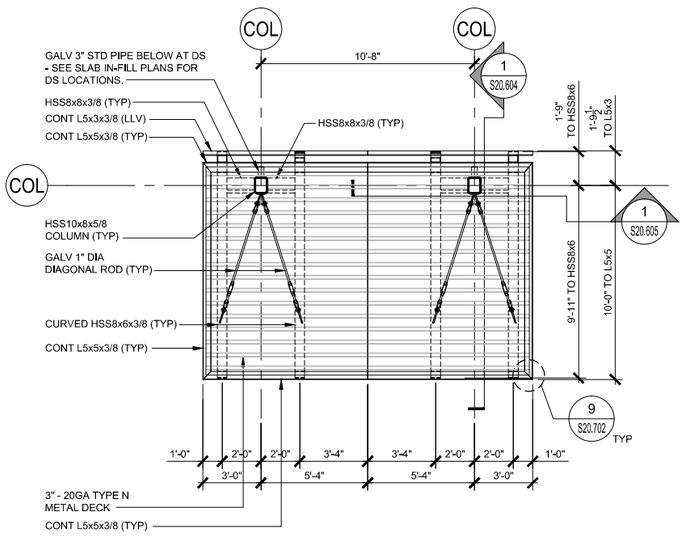

ROOF FRAMING PLAN AT CANOPY "A" MINI HIGH

SCALE: 1/8"=1'-0"

2 S20.404

STEEL PENETRATION NOTES:

1. SEE ARCHITECTURAL AND MEP DRAWINGS FOR CONDUIT AND PLUMBING PENETRATIONS THRU COLUMNS AND OTHER STRUCTURES. ALL PENETRATIONS MUST BE INCLUDED IN THE STRUCTURAL STEEL SUBMITTAL FOR REVIEW. CONTRACTOR MUST COORDINATE WITH ALL TRADES AND VERIFY THE SIZE AND LOCATION OF ALL OPENINGS IN THE STRUCTURE PRIOR TO FABRICATION.

2. SEE ARCHITECTURAL AND SIGNAGE DRAWINGS FOR CONNECTION PLATE REQUIREMENTS AT PRE-MANUFACTURED SIGNS. PLATE SIZE, LOCATION AND FASTENERS FOR ALL SIGNAGE CONNECTIONS MUST BE INCLUDED IN THE STRUCTURAL STEEL SUBMITTAL FOR REVIEW. CONTRACTOR MUST COORDINATE AND VERIFY CONNECTION PLATE SIZE AND LOCATION PRIOR TO FABRICATION.

NOTICE: THE OFFICIAL RECORD OF THIS SHEET IS THE ELECTRONIC FILE SIGNED AND SEALED UNDER RULE 61G15-23.003, F.A.C.

REVISIONS					
DATE	BY	DESCRIPTION	DATE	BY	DESCRIPTION

McElroyEngineering LLC
STRUCTURAL DESIGN GROUP
1835 EDGEWATER DR. ORLANDO, FL. 32804
P: 407.245.8775 | F: 407.245.8744
www.mcelroyeng.com
CERTIFICATE OF AUTHORIZATION - 8822
CRAIG E. McELROY, P.E. NO. 44741

STATE OF FLORIDA
DEPARTMENT OF TRANSPORTATION

ROAD NO.	COUNTY	FINANCIAL PROJECT ID
CFRC P2S	VARIOUS	423446-9-52-01

CENTRAL FLORIDA COMMUTER RAIL TRANSIT (CFCRT) PHASE 2 SOUTH

ENLARGED PLANS

SHEET NO. 157

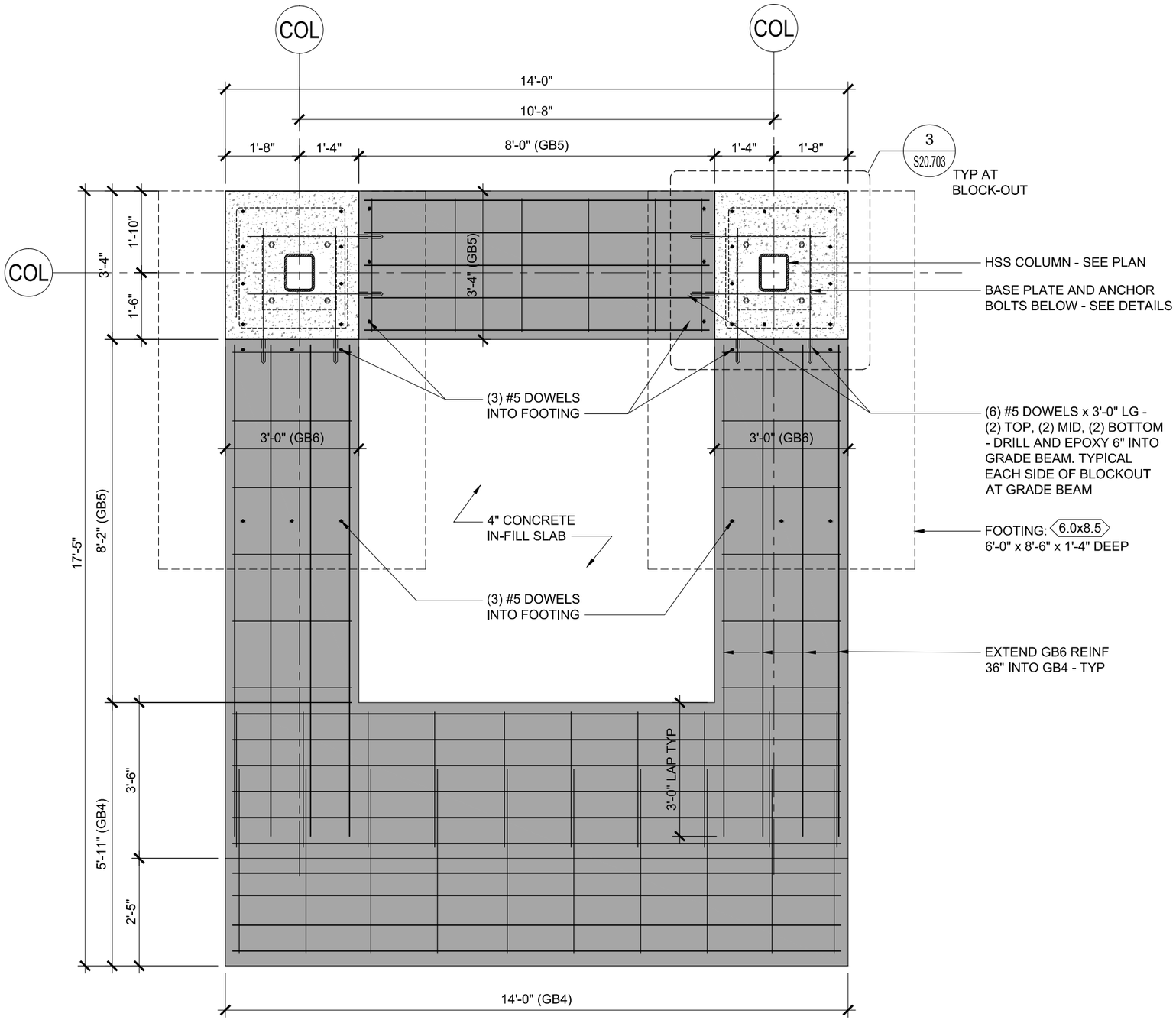

ENLARGED PARTIAL FOUNDATION PLAN AT CANOPY TYPE "A" MINI-HIGH

SCALE: 3/8"=1'-0"

1
S20.405

REVISIONS					
DATE	BY	DESCRIPTION	DATE	BY	DESCRIPTION

McElroyEngineering
STRUCTURAL DESIGN GROUP
1835 EDGEWATER DR. ORLANDO, FL. 32804
P: 407.245.8775 | F: 407.245.8744
www.mcelroyeng.com
CERTIFICATE OF AUTHORIZATION - 8822
CRAIG E. McELROY, P.E. NO. 44741

STATE OF FLORIDA DEPARTMENT OF TRANSPORTATION		
ROAD NO.	COUNTY	FINANCIAL PROJECT ID
CFRC P2S	VARIOUS	423446-9-52-01

CENTRAL FLORIDA COMMUTER RAIL TRANSIT (CFCRT) PHASE 2 SOUTH

ENLARGED PLANS

SHEET NO.
158

NOTICE: THE OFFICIAL RECORD OF THIS SHEET IS THE ELECTRONIC FILE SIGNED AND SEALED UNDER RULE 61G15-23.003, F.A.C.

DRAWING NO.
S20.406

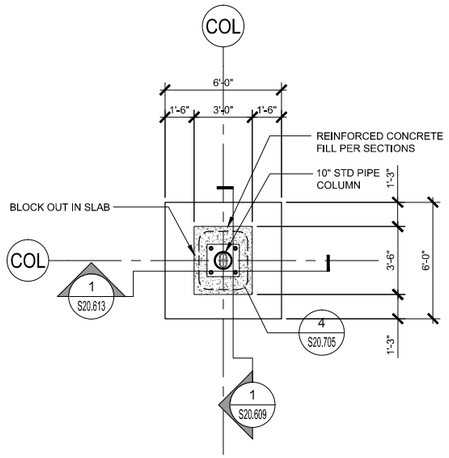

PARTIAL FOUNDATION PLAN
AT CANOPY "F"
SCALE: 1/8"=1'-0"
1 S20.406

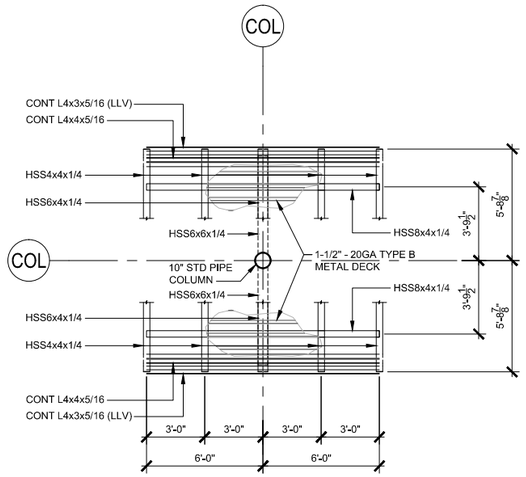

PARTIAL ROOF FRAMING PLAN
AT CANOPY "F"
SCALE: 1/8"=1'-0"
2 S20.406

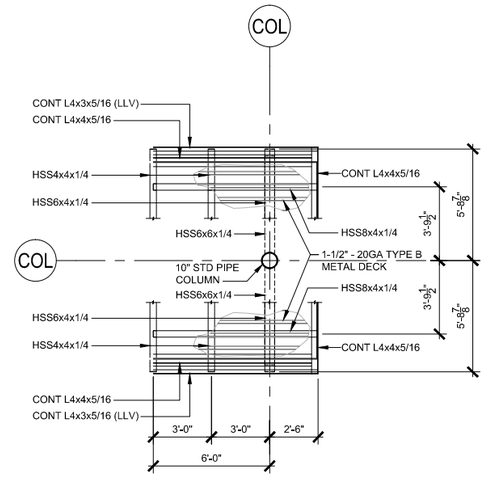

PARTIAL ROOF FRAMING PLAN
AT END OF CANOPY "F"
SCALE: 1/8"=1'-0"
3 S20.406

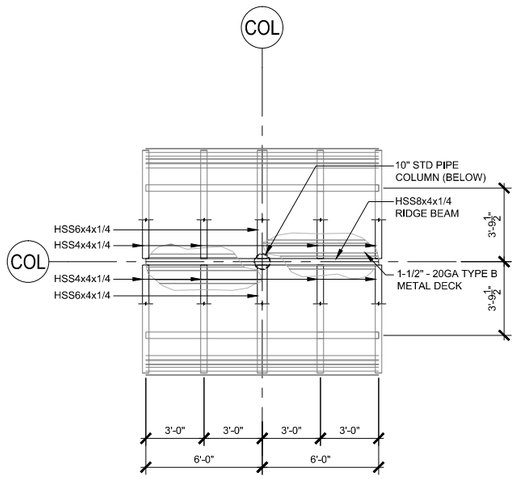

PARTIAL ROOF FRAMING PLAN
AT CANOPY "F"
SCALE: 1/8"=1'-0"
4 S20.406

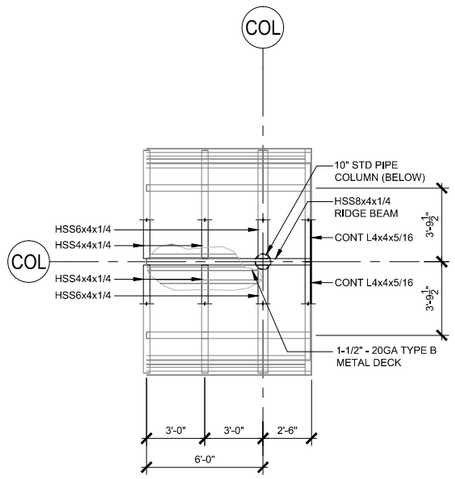

PARTIAL ROOF FRAMING PLAN
AT END OF CANOPY "F"
SCALE: 1/8"=1'-0"
5 S20.406

STEEL PENETRATION NOTES:

1. SEE ARCHITECTURAL AND MEP DRAWINGS FOR CONDUIT AND PLUMBING PENETRATIONS THRU COLUMNS AND OTHER STRUCTURES. ALL PENETRATIONS MUST BE INCLUDED IN THE STRUCTURAL STEEL SUBMITTAL FOR REVIEW. CONTRACTOR MUST COORDINATE WITH ALL TRADES AND VERIFY THE SIZE AND LOCATION OF ALL OPENINGS IN THE STRUCTURE PRIOR TO FABRICATION.
2. SEE ARCHITECTURAL AND SIGNAGE DRAWINGS FOR CONNECTION PLATE REQUIREMENTS AT PRE-MANUFACTURED SIGNS. PLATE SIZE, LOCATION AND FASTENERS FOR ALL SIGNAGE CONNECTIONS MUST BE INCLUDED IN THE STRUCTURAL STEEL SUBMITTAL FOR REVIEW. CONTRACTOR MUST COORDINATE AND VERIFY CONNECTION PLATE SIZE AND LOCATION PRIOR TO FABRICATION.

NOTICE: THE OFFICIAL RECORD OF THIS SHEET IS THE ELECTRONIC FILE SIGNED AND SEALED UNDER RULE 61G15-23.003, F.A.C.

REVISIONS					
DATE	BY	DESCRIPTION	DATE	BY	DESCRIPTION

McElroyEngineering LLC
STRUCTURAL DESIGN GROUP
1835 EDGEWATER DR. ORLANDO, FL. 32804
P: 407.245.8775 | F: 407.245.8744
www.mcelroyeng.com
CERTIFICATE OF AUTHORIZATION - 8822
CRAIG E. McELROY, P.E. NO. 44741

STATE OF FLORIDA
DEPARTMENT OF TRANSPORTATION

ROAD NO.	COUNTY	FINANCIAL PROJECT ID
CFRC P2S	OSCEOLA	423446-9-52-01

CENTRAL FLORIDA COMMUTER RAIL TRANSIT (CFCRT) PHASE 2 SOUTH

ENLARGED PLANS

SHEET NO. 159

DRAWING NO.
S20.407

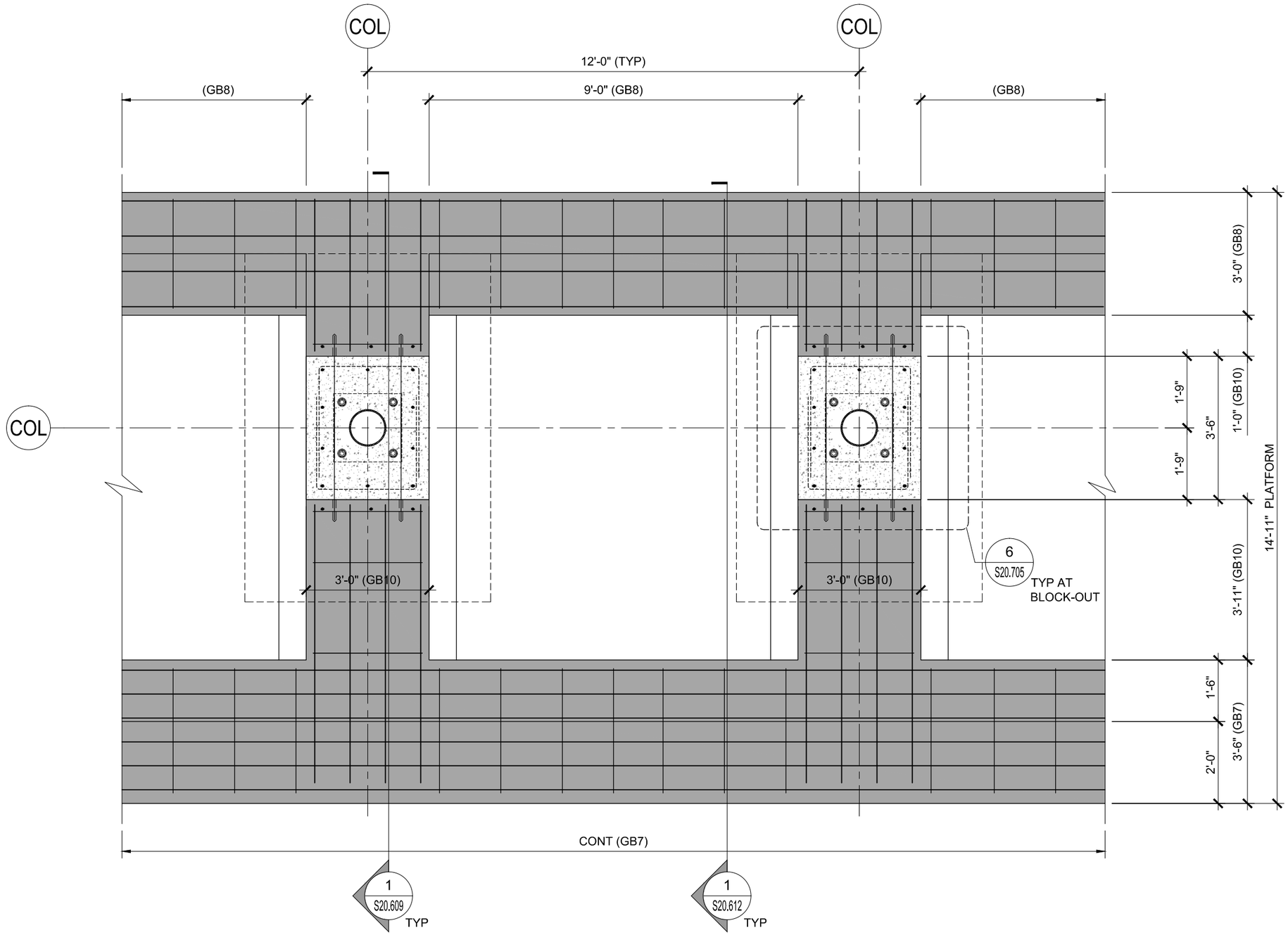

ENLARGED PARTIAL FOUNDATION PLAN AT CANOPY TYPE "F"

SCALE: 3/8"=1'-0"

1
S20.407

NOTICE: THE OFFICIAL RECORD OF THIS SHEET IS THE ELECTRONIC FILE SIGNED AND SEALED UNDER RULE 61G15-23.003, F.A.C.

REVISIONS					
DATE	BY	DESCRIPTION	DATE	BY	DESCRIPTION

McElroyEngineering LLC
STRUCTURAL DESIGN GROUP
1835 EDGEWATER DR. ORLANDO, FL. 32804
P: 407.245.8775 | F: 407.245.8744
www.mcelroyeng.com
CERTIFICATE OF AUTHORIZATION - 8822
CRAIG E. McELROY, P.E. NO. 44741

STATE OF FLORIDA
DEPARTMENT OF TRANSPORTATION

ROAD NO.	COUNTY	FINANCIAL PROJECT ID
CFRC P2S	OSCEOLA	423446-9-52-01

CENTRAL FLORIDA COMMUTER RAIL TRANSIT (CFCRT) PHASE 2 SOUTH

ENLARGED PLANS

SHEET NO.
160

DRAWING NO.
S20.408

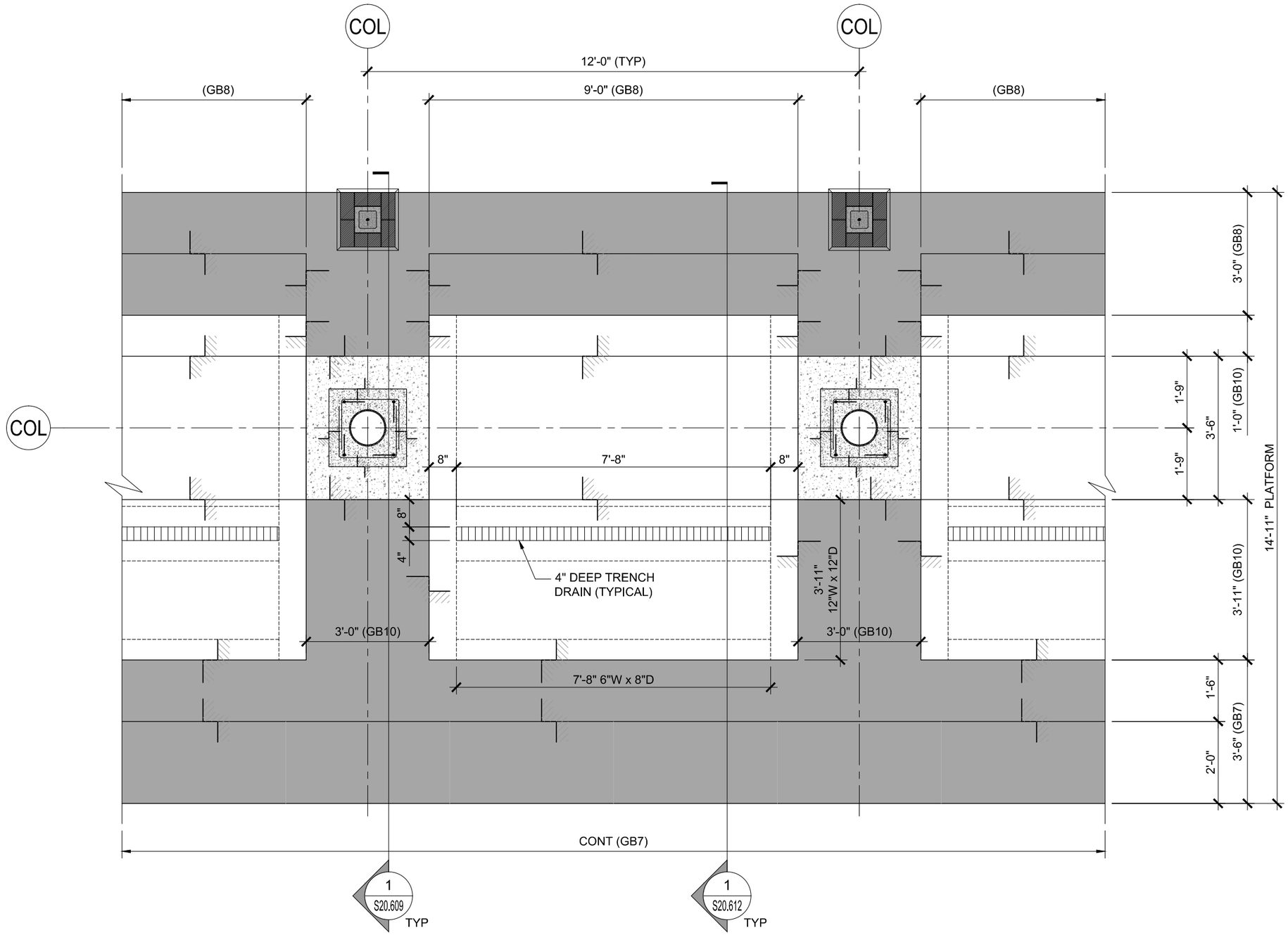

ENLARGED SLAB IN-FILL PLAN - CANOPY TYPE "F"

SCALE: 3/8"=1'-0"

1
S20.408

NOTICE: THE OFFICIAL RECORD OF THIS SHEET IS THE ELECTRONIC FILE SIGNED AND SEALED UNDER RULE 61G15-23.003, F.A.C.

REVISIONS					
DATE	BY	DESCRIPTION	DATE	BY	DESCRIPTION

McElroyEngineering LLC
STRUCTURAL DESIGN GROUP
1835 EDGEWATER DR. ORLANDO, FL. 32804
P: 407.245.8775 | F: 407.245.8744
www.mcelroyeng.com
CERTIFICATE OF AUTHORIZATION - 8822
CRAIG E. McELROY, P.E. NO. 44741

STATE OF FLORIDA
DEPARTMENT OF TRANSPORTATION

ROAD NO.	COUNTY	FINANCIAL PROJECT ID
CFRC P2S	OSCEOLA	423446-9-52-01

CENTRAL FLORIDA COMMUTER RAIL TRANSIT (CFCRT) PHASE 2 SOUTH

ENLARGED PLANS

SHEET NO.
161

DRAWING NO.
S20.409

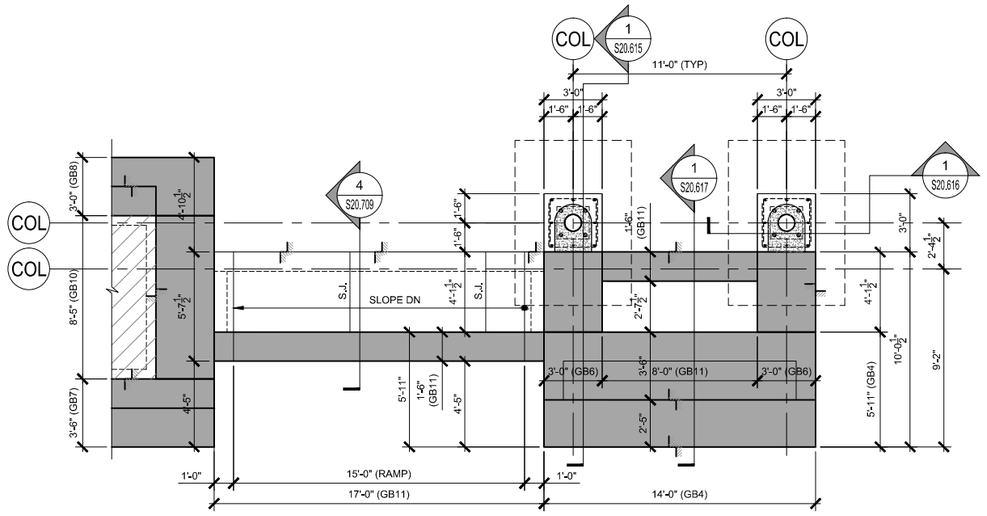

FOUNDATION PLAN AT
CANOPY "F" MINI HIGH — 1 S20.409
SCALE: 1/8"=1'-0"

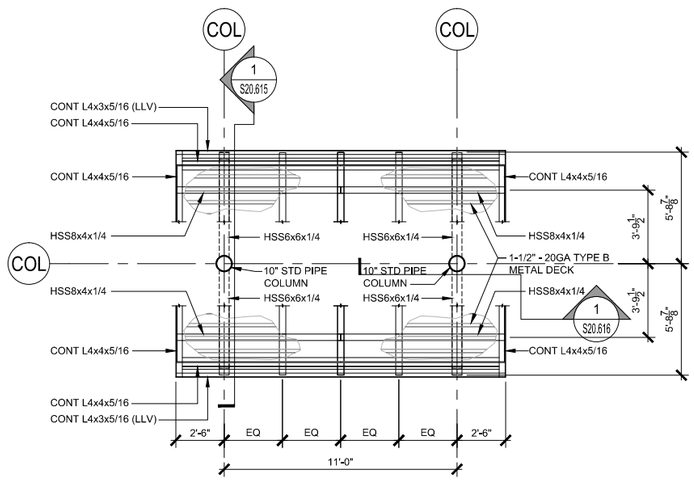

ROOF FRAMING PLAN - LOW
AT CANOPY "F" MINI HIGH — 2 S20.409
SCALE: 1/8"=1'-0"

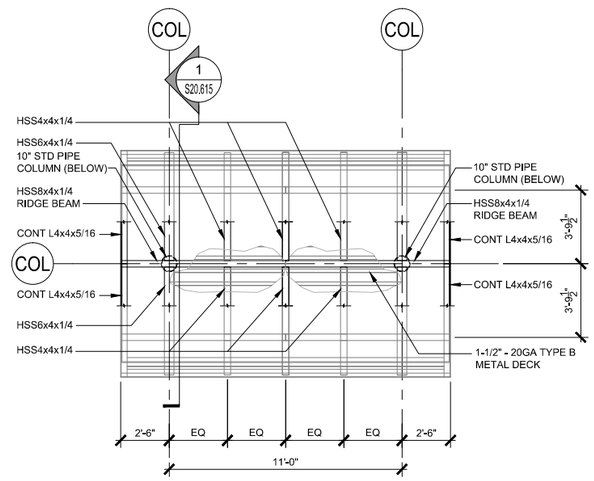

ROOF FRAMING PLAN - HIGH
AT CANOPY "F" MINI HIGH — 3 S20.409
SCALE: 1/8"=1'-0"

STEEL PENETRATION NOTES:

1. SEE ARCHITECTURAL AND MEP DRAWINGS FOR CONDUIT AND PLUMBING PENETRATIONS THRU COLUMNS AND OTHER STRUCTURES. ALL PENETRATIONS MUST BE INCLUDED IN THE STRUCTURAL STEEL SUBMITTAL FOR REVIEW. CONTRACTOR MUST COORDINATE WITH ALL TRADES AND VERIFY THE SIZE AND LOCATION OF ALL OPENINGS IN THE STRUCTURE PRIOR TO FABRICATION.
2. SEE ARCHITECTURAL AND SIGNAGE DRAWINGS FOR CONNECTION PLATE REQUIREMENTS AT PRE-MANUFACTURED SIGNS. PLATE SIZE, LOCATION AND FASTENERS FOR ALL SIGNAGE CONNECTIONS MUST BE INCLUDED IN THE STRUCTURAL STEEL SUBMITTAL FOR REVIEW. CONTRACTOR MUST COORDINATE AND VERIFY CONNECTION PLATE SIZE AND LOCATION PRIOR TO FABRICATION.

NOTICE: THE OFFICIAL RECORD OF THIS SHEET IS THE ELECTRONIC FILE SIGNED AND SEALED UNDER RULE 61G15-23.003, F.A.C.

REVISIONS					
DATE	BY	DESCRIPTION	DATE	BY	DESCRIPTION

McElroyEngineering LLC
STRUCTURAL DESIGN GROUP
1835 EDGEWATER DR. ORLANDO, FL. 32804
P: 407.245.8775 | F: 407.245.8744
www.mcelroyeng.com
CERTIFICATE OF AUTHORIZATION - 8822
CRAIG E. McELROY, P.E. NO. 44741

STATE OF FLORIDA
DEPARTMENT OF TRANSPORTATION

ROAD NO.	COUNTY	FINANCIAL PROJECT ID
CFRC P2S	OSCEOLA	423446-9-52-01

CENTRAL FLORIDA COMMUTER RAIL TRANSIT (CFCRT) PHASE 2 SOUTH

ENLARGED PLANS

SHEET NO. 162

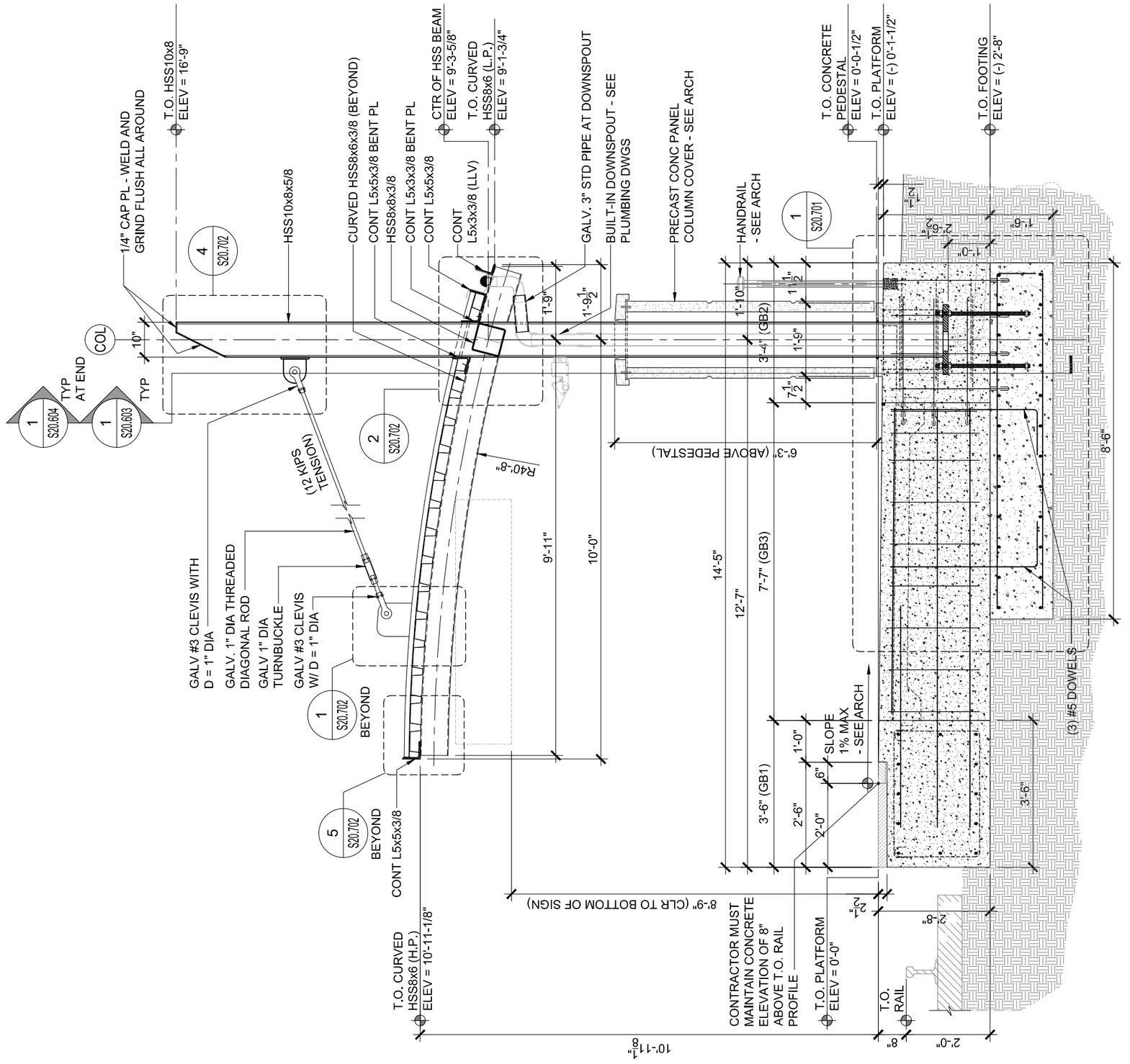

STEEL PENETRATION NOTES:

1. SEE ARCHITECTURAL AND MEP DRAWINGS FOR CONDUIT AND PLUMBING PENETRATIONS THRU COLUMNS AND OTHER STRUCTURES. ALL PENETRATIONS MUST BE INCLUDED IN THE STRUCTURAL STEEL SUBMITTAL FOR REVIEW. CONTRACTOR MUST COORDINATE WITH ALL TRADES AND VERIFY THE SIZE AND LOCATION OF ALL OPENINGS IN THE STRUCTURE PRIOR TO FABRICATION.

2. SEE ARCHITECTURAL AND SIGNAGE DRAWINGS FOR CONNECTION PLATE REQUIREMENTS AT PRE-MANUFACTURED SIGNS. PLATE SIZE, LOCATION AND FASTENERS FOR ALL SIGNAGE CONNECTIONS MUST BE INCLUDED IN THE STRUCTURAL STEEL SUBMITTAL FOR REVIEW. CONTRACTOR MUST COORDINATE AND VERIFY CONNECTION PLATE SIZE AND LOCATION PRIOR TO FABRICATION.

TYPICAL PLATFORM SECTION AT COLUMN

SCALE: 3/8"=1'-0"

CANOPY A

1 / S20.601

DRAWING NO. S20.601

NOTICE: THE OFFICIAL RECORD OF THIS SHEET IS THE ELECTRONIC FILE SIGNED AND SEALED UNDER RULE 61G15-23.003, F.A.C.

REVISIONS					
DATE	BY	DESCRIPTION	DATE	BY	DESCRIPTION

McElroyEngineering
STRUCTURAL DESIGN GROUP
1835 EDGEWATER DR. ORLANDO, FL. 32804
P: 407.245.8775 | F: 407.245.8744
www.mcelroyeng.com
CERTIFICATE OF AUTHORIZATION - 8822
CRAIG E. McELROY, P.E. NO. 44741

STATE OF FLORIDA
DEPARTMENT OF TRANSPORTATION

ROAD NO.	COUNTY	FINANCIAL PROJECT ID
CFRC P2S	VARIOUS	423446-9-52-01

CENTRAL FLORIDA COMMUTER RAIL TRANSIT (CFCRT) PHASE 2 SOUTH

OVERALL SECTIONS

SHEET NO. 163

STEEL PENETRATION NOTES:

1. SEE ARCHITECTURAL AND MEP DRAWINGS FOR CONDUIT AND PLUMBING PENETRATIONS THRU COLUMNS AND OTHER STRUCTURES. ALL PENETRATIONS MUST BE INCLUDED IN THE STRUCTURAL STEEL SUBMITTAL FOR REVIEW. CONTRACTOR MUST COORDINATE WITH ALL TRADES AND VERIFY THE SIZE AND LOCATION OF ALL OPENINGS IN THE STRUCTURE PRIOR TO FABRICATION.

2. SEE ARCHITECTURAL AND SIGNAGE DRAWINGS FOR CONNECTION PLATE REQUIREMENTS AT PRE-MANUFACTURED SIGNS. PLATE SIZE, LOCATION AND FASTENERS FOR ALL SIGNAGE CONNECTIONS MUST BE INCLUDED IN THE STRUCTURAL STEEL SUBMITTAL FOR REVIEW. CONTRACTOR MUST COORDINATE AND VERIFY CONNECTION PLATE SIZE AND LOCATION PRIOR TO FABRICATION.

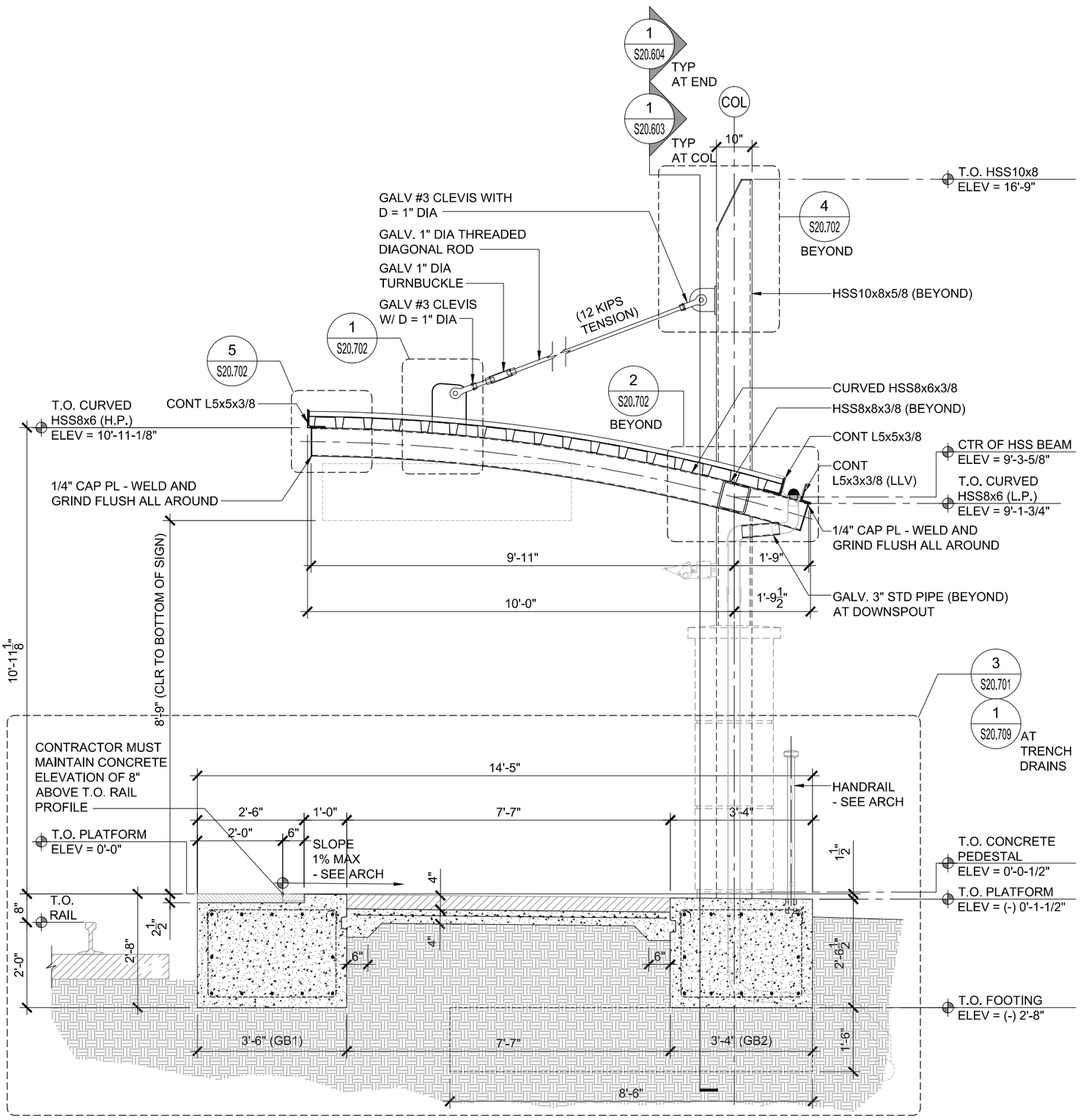

TYPICAL PLATFORM SECTION BETWEEN COLUMNS

SCALE: 3/8"=1'-0"

CANOPY A

1 S20.602

DRAWING NO. S20.602

REVISIONS

DATE	BY	DESCRIPTION	DATE	BY	DESCRIPTION

McElroyEngineering
STRUCTURAL DESIGN GROUP
1835 EDGEWATER DR. ORLANDO, FL. 32804
P: 407.245.8775 | F: 407.245.8744
www.mcelroyeng.com
CERTIFICATE OF AUTHORIZATION - 8822
CRAIG E. McELROY, P.E. NO. 44741

STATE OF FLORIDA
DEPARTMENT OF TRANSPORTATION

ROAD NO.	COUNTY	FINANCIAL PROJECT ID
CFRC P2S	VARIOUS	423446-9-52-01

CENTRAL FLORIDA COMMUTER RAIL TRANSIT (CFCRT) PHASE 2 SOUTH

OVERALL SECTIONS

SHEET NO. 164

Wed, 13 May 2015 11:39 am N:\AECOM\391_01 CFCRT Phase 2 Amendment #5\DWGS\20_Details\391101_S20.602.dwg

NOTICE: THE OFFICIAL RECORD OF THIS SHEET IS THE ELECTRONIC FILE SIGNED AND SEALED UNDER RULE 61G15-23.003, F.A.C.

STEEL PENETRATION NOTES:

1. SEE ARCHITECTURAL AND MEP DRAWINGS FOR CONDUIT AND PLUMBING PENETRATIONS THRU COLUMNS AND OTHER STRUCTURES. ALL PENETRATIONS MUST BE INCLUDED IN THE STRUCTURAL STEEL SUBMITTAL FOR REVIEW. CONTRACTOR MUST COORDINATE WITH ALL TRADES AND VERIFY THE SIZE AND LOCATION OF ALL OPENINGS IN THE STRUCTURE PRIOR TO FABRICATION.

2. SEE ARCHITECTURAL AND SIGNAGE DRAWINGS FOR CONNECTION PLATE REQUIREMENTS AT PRE-MANUFACTURED SIGNS. PLATE SIZE, LOCATION AND FASTENERS FOR ALL SIGNAGE CONNECTIONS MUST BE INCLUDED IN THE STRUCTURAL STEEL SUBMITTAL FOR REVIEW. CONTRACTOR MUST COORDINATE AND VERIFY CONNECTION PLATE SIZE AND LOCATION PRIOR TO FABRICATION.

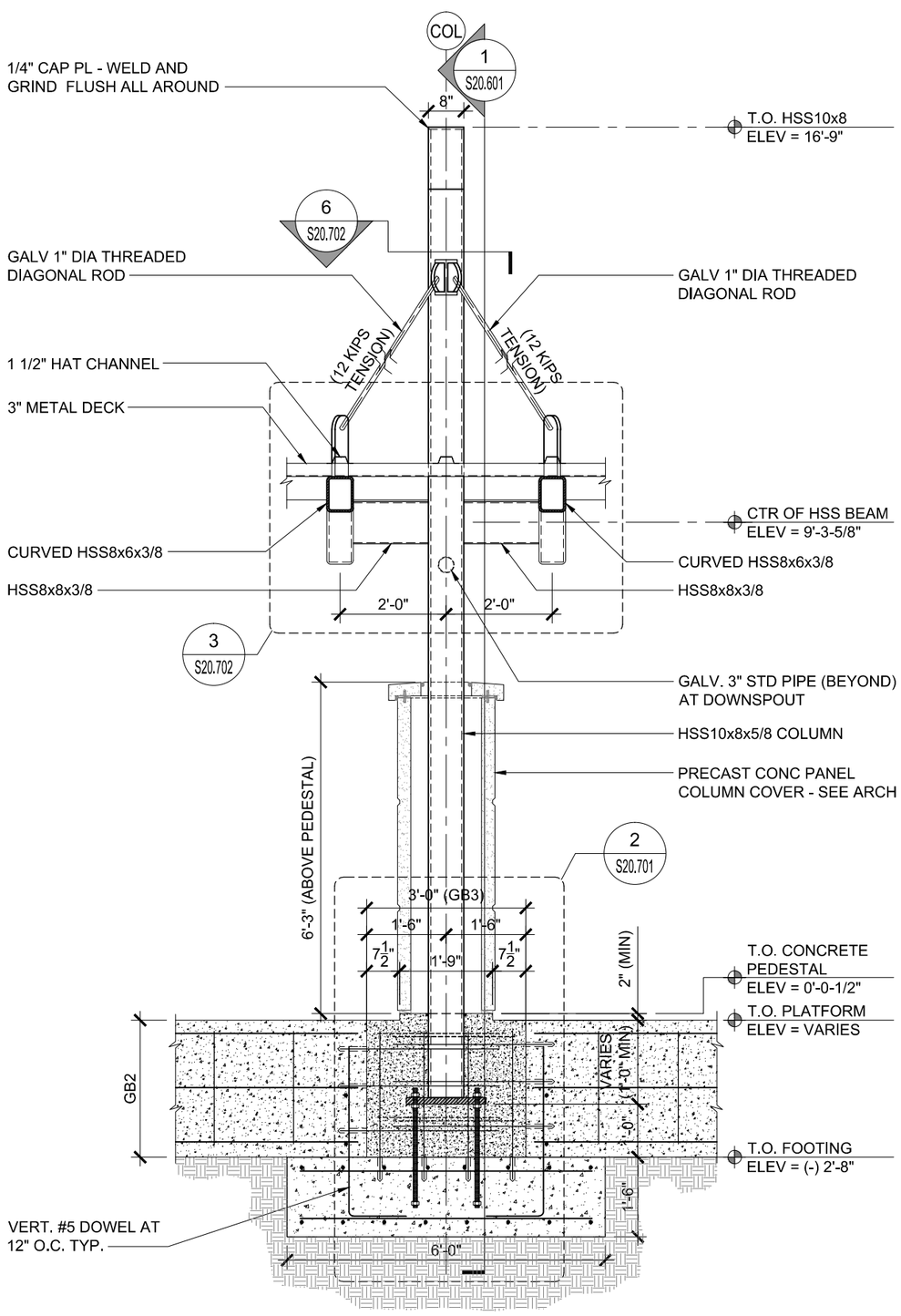

TYPICAL PLATFORM SECTION AT COLUMN

SCALE: 3/8"=1'-0"

CANOPY A

1
S20.603

DATE	BY	DESCRIPTION

REVISIONS

DATE	BY	DESCRIPTION

McElroyEngineering
STRUCTURAL DESIGN GROUP
1635 EDGEWATER DRIVE ORLANDO, FL 32804
P: 407.245.8775 | F: 407.245.8744
www.mcelroyeng.com
CERTIFICATE OF AUTHORIZATION - 8822
CRAIG E. McELROY, P.E. NO. 44741

STATE OF FLORIDA
DEPARTMENT OF TRANSPORTATION

ROAD NO.	COUNTY	FINANCIAL PROJECT ID
CFRC P2S	VARIOUS	423446-9-52-01

CENTRAL FLORIDA COMMUTER RAIL TRANSIT (CFCRT) PHASE 2 SOUTH

OVERALL SECTIONS

SHEET NO. 165

DRAWING NO. S20.603

Wed, 13 May 2015 11:39 am N:\AECOM\391_01 CFCRT Phase 2 Amendment #5\CNGS\20_Details\391_S20.603.dwg

NOTICE: THE OFFICIAL RECORD OF THIS SHEET IS THE ELECTRONIC FILE SIGNED AND SEALED UNDER RULE 61G15-23.003, F.A.C.

STEEL PENETRATION NOTES:

1. SEE ARCHITECTURAL AND MEP DRAWINGS FOR CONDUIT AND PLUMBING PENETRATIONS THRU COLUMNS AND OTHER STRUCTURES. ALL PENETRATIONS MUST BE INCLUDED IN THE STRUCTURAL STEEL SUBMITTAL FOR REVIEW. CONTRACTOR MUST COORDINATE WITH ALL TRADES AND VERIFY THE SIZE AND LOCATION OF ALL OPENINGS IN THE STRUCTURE PRIOR TO FABRICATION.

2. SEE ARCHITECTURAL AND SIGNAGE DRAWINGS FOR CONNECTION PLATE REQUIREMENTS AT PRE-MANUFACTURED SIGNS. PLATE SIZE, LOCATION AND FASTENERS FOR ALL SIGNAGE CONNECTIONS MUST BE INCLUDED IN THE STRUCTURAL STEEL SUBMITTAL FOR REVIEW. CONTRACTOR MUST COORDINATE AND VERIFY CONNECTION PLATE SIZE AND LOCATION PRIOR TO FABRICATION.

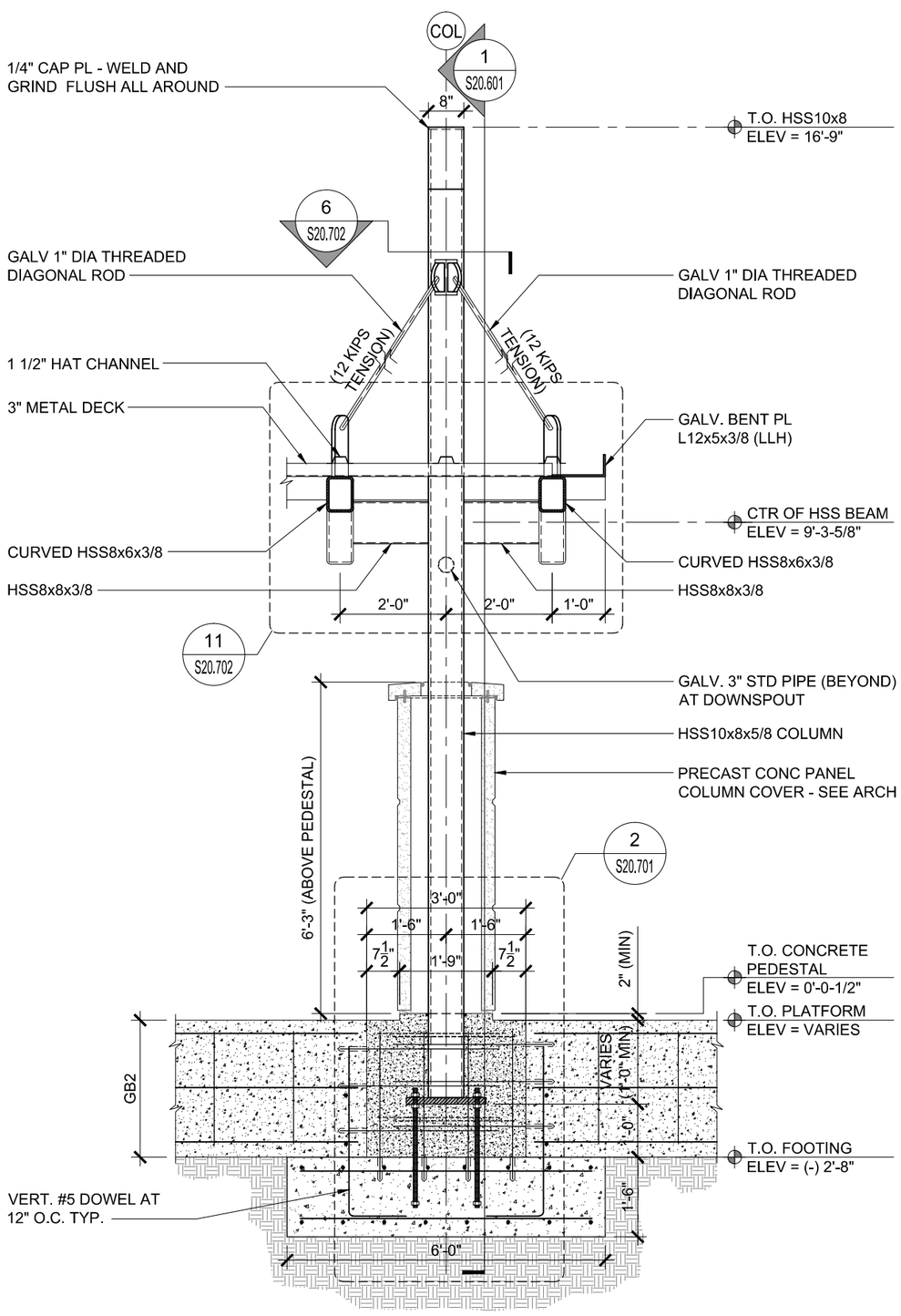

TYPICAL PLATFORM SECTION AT END OF CANOPY

SCALE: 3/8"=1'-0"

CANOPY A

1
S20.604

DRAWING NO. S20.604

REVISIONS

DATE	BY	DESCRIPTION
DATE	BY	DESCRIPTION

McElroyEngineering
STRUCTURAL DESIGN GROUP
1635 EDGEWATER DRIVE ORLANDO, FL 32804
P: 407.245.8775 | F: 407.245.8744
www.mcelroyeng.com
CERTIFICATE OF AUTHORIZATION - 8822
CRAIG E. McELROY, P.E. NO. 44741

STATE OF FLORIDA
DEPARTMENT OF TRANSPORTATION

ROAD NO.	COUNTY	FINANCIAL PROJECT ID
CFRC P2S	VARIOUS	423446-9-52-01

CENTRAL FLORIDA COMMUTER RAIL TRANSIT (CFCRT) PHASE 2 SOUTH

OVERALL SECTIONS

SHEET NO. 166

Wed, 13 May 2015 11:40 am N:\AECOM\391L01 CFCRT Phase 2 Amendment #5\CNGS\20_Details\391L01_S20.604.dwg

NOTICE: THE OFFICIAL RECORD OF THIS SHEET IS THE ELECTRONIC FILE SIGNED AND SEALED UNDER RULE 61G15-23.003, F.A.C.

STEEL PENETRATION NOTES:

1. SEE ARCHITECTURAL AND MEP DRAWINGS FOR CONDUIT AND PLUMBING PENETRATIONS THRU COLUMNS AND OTHER STRUCTURES. ALL PENETRATIONS MUST BE INCLUDED IN THE STRUCTURAL STEEL SUBMITTAL FOR REVIEW. CONTRACTOR MUST COORDINATE WITH ALL TRADES AND VERIFY THE SIZE AND LOCATION OF ALL OPENINGS IN THE STRUCTURE PRIOR TO FABRICATION.

2. SEE ARCHITECTURAL AND SIGNAGE DRAWINGS FOR CONNECTION PLATE REQUIREMENTS AT PRE-MANUFACTURED SIGNS. PLATE SIZE, LOCATION AND FASTENERS FOR ALL SIGNAGE CONNECTIONS MUST BE INCLUDED IN THE STRUCTURAL STEEL SUBMITTAL FOR REVIEW. CONTRACTOR MUST COORDINATE AND VERIFY CONNECTION PLATE SIZE AND LOCATION PRIOR TO FABRICATION.

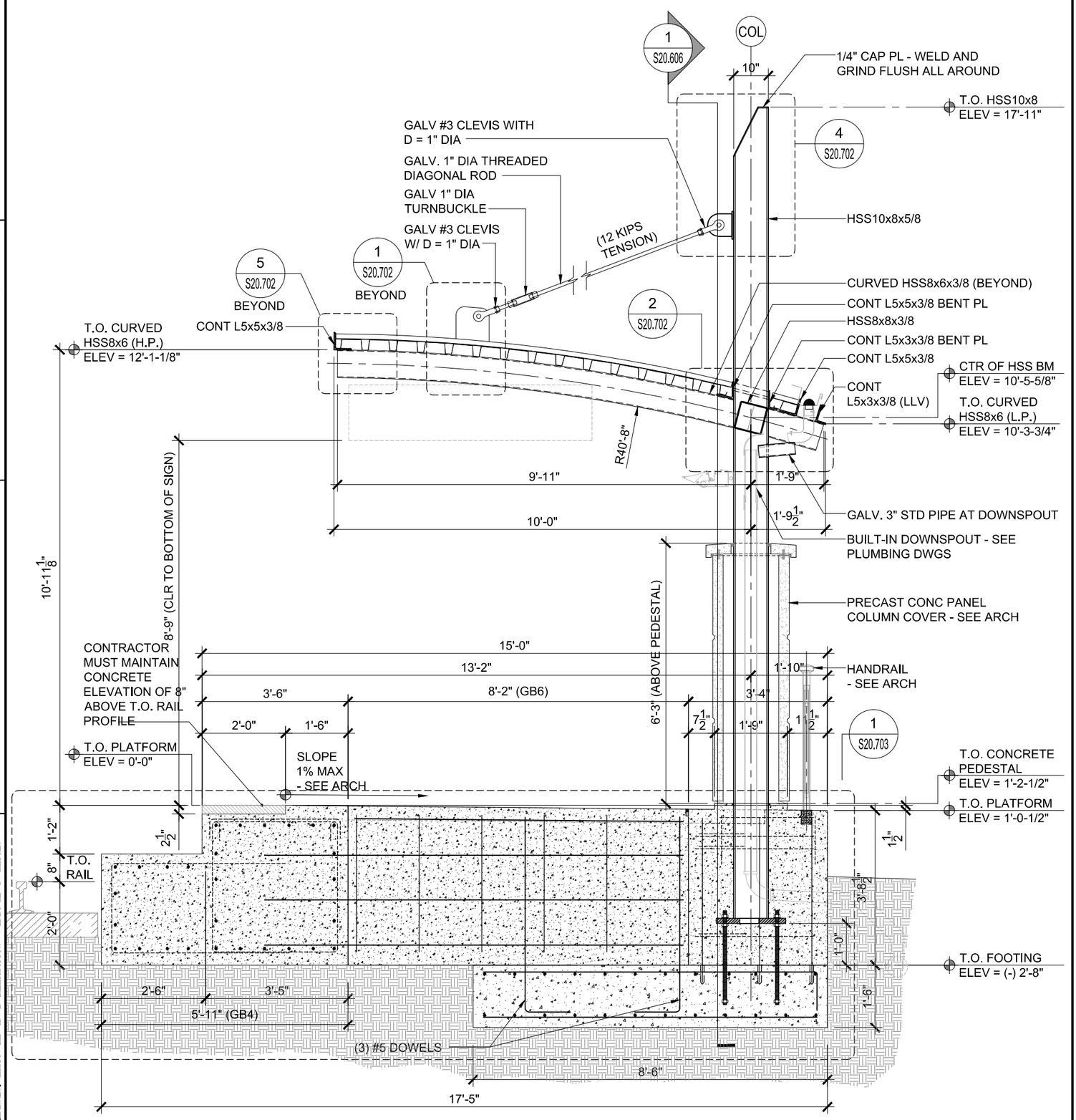

TYPICAL PLATFORM SECTION AT COLUMN - MINI-HIGH

SCALE: 3/8"=1'-0"

CANOPY A

1 / S20.605

DATE	BY	DESCRIPTION

REVISIONS

DATE	BY	DESCRIPTION

McElroyEngineering
STRUCTURAL DESIGN GROUP
1635 EDGEWATER DR. ORLANDO, FL 32804
P: 407.245.8775 | F: 407.245.8744
www.mcelroyeng.com
CERTIFICATE OF AUTHORIZATION - 8822
CRAIG E. McELROY, P.E. NO. 44741

STATE OF FLORIDA
DEPARTMENT OF TRANSPORTATION

ROAD NO.	COUNTY	FINANCIAL PROJECT ID
CFRC P2S	VARIOUS	423446-9-52-01

CENTRAL FLORIDA COMMUTER RAIL TRANSIT (CFRCT) PHASE 2 SOUTH

OVERALL SECTIONS

SHEET NO. 167

DRAWING NO. S20.605

Wed, 13 May 2015 11:40 am N:\VECOM \39\LOI CFCRT Phase 2 Amendment #5\CNGS \20_Details \39I0I_S20.605.dwg

NOTICE: THE OFFICIAL RECORD OF THIS SHEET IS THE ELECTRONIC FILE SIGNED AND SEALED UNDER RULE 61G15-23.003, F.A.C.

STEEL PENETRATION NOTES:

1. SEE ARCHITECTURAL AND MEP DRAWINGS FOR CONDUIT AND PLUMBING PENETRATIONS THRU COLUMNS AND OTHER STRUCTURES. ALL PENETRATIONS MUST BE INCLUDED IN THE STRUCTURAL STEEL SUBMITTAL FOR REVIEW. CONTRACTOR MUST COORDINATE WITH ALL TRADES AND VERIFY THE SIZE AND LOCATION OF ALL OPENINGS IN THE STRUCTURE PRIOR TO FABRICATION.

2. SEE ARCHITECTURAL AND SIGNAGE DRAWINGS FOR CONNECTION PLATE REQUIREMENTS AT PRE-MANUFACTURED SIGNS. PLATE SIZE, LOCATION AND FASTENERS FOR ALL SIGNAGE CONNECTIONS MUST BE INCLUDED IN THE STRUCTURAL STEEL SUBMITTAL FOR REVIEW. CONTRACTOR MUST COORDINATE AND VERIFY CONNECTION PLATE SIZE AND LOCATION PRIOR TO FABRICATION.

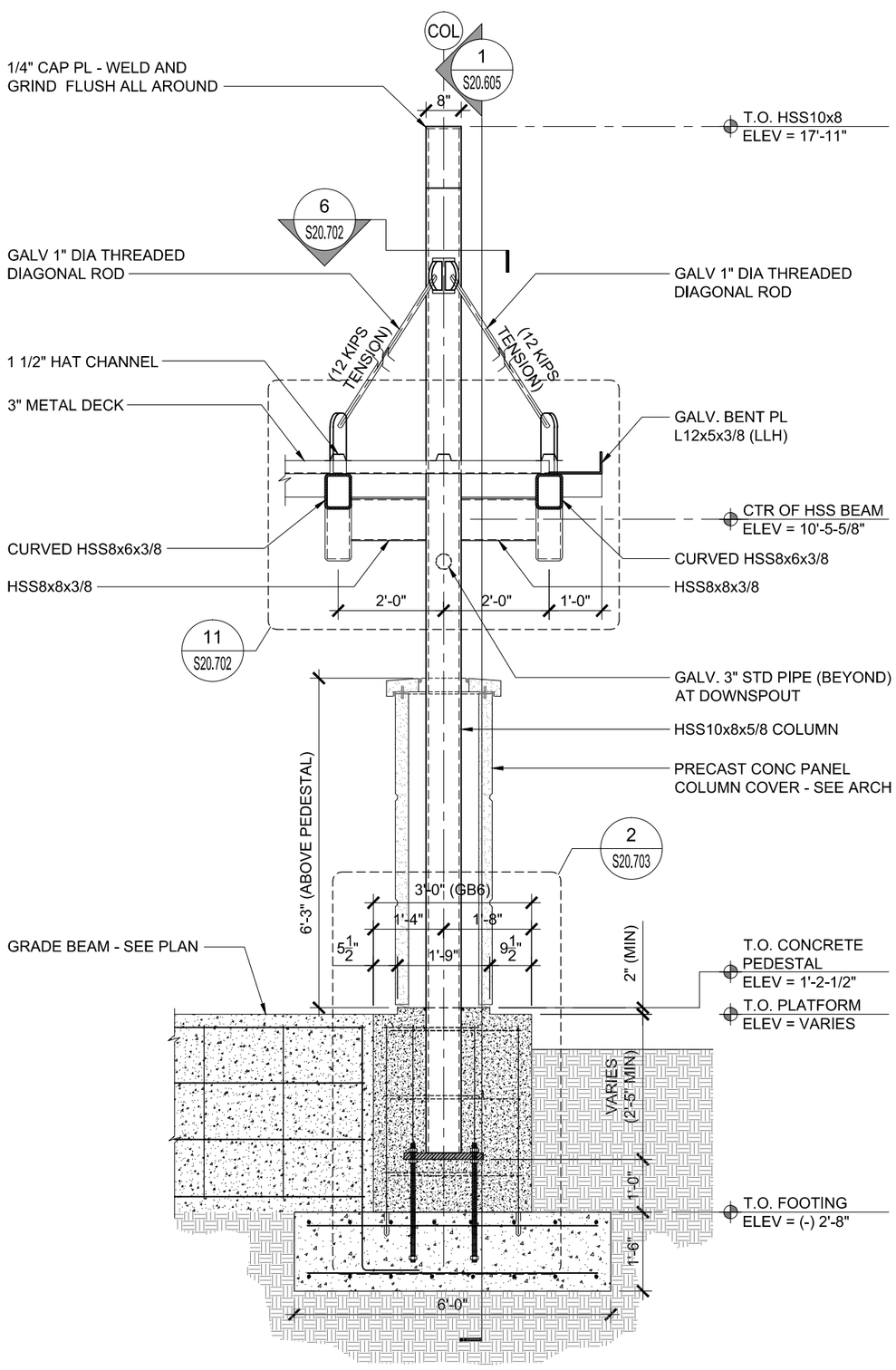

TYPICAL PLATFORM SECTION AT COLUMN - MINI-HIGH

SCALE: 3/8"=1'-0"

CANOPY A

1
S20.606

DRAWING NO. S20.606

SHEET NO. 168

OVERALL SECTIONS

CENTRAL FLORIDA COMMUTER RAIL TRANSIT (CFCRT) PHASE 2 SOUTH

STATE OF FLORIDA
DEPARTMENT OF TRANSPORTATION

ROAD NO.	COUNTY	FINANCIAL PROJECT ID
CFRC P2S	VARIOUS	423446-9-52-01

McElroyEngineering
STRUCTURAL DESIGN GROUP
1635 EDGEWATER DRIVE ORLANDO, FL 32804
P: 407.245.8775 | F: 407.245.8744
www.mcelroyeng.com
CERTIFICATE OF AUTHORIZATION - 8822
CRAIG E. McELROY, P.E. NO. 44741

DATE	BY	DESCRIPTION

REVISIONS

DATE	BY	DESCRIPTION

Wed, 13 May 2015 11:40 am N:\VECOM \39\L01 CFCRT Phase 2 Amendment #5\CNGS \20_Details \39l01_S20.606.dwg

NOTICE: THE OFFICIAL RECORD OF THIS SHEET IS THE ELECTRONIC FILE SIGNED AND SEALED UNDER RULE 61G15-23.003, F.A.C.

STEEL PENETRATION NOTES:

1. SEE ARCHITECTURAL AND MEP DRAWINGS FOR CONDUIT AND PLUMBING PENETRATIONS THRU COLUMNS AND OTHER STRUCTURES. ALL PENETRATIONS MUST BE INCLUDED IN THE STRUCTURAL STEEL SUBMITTAL FOR REVIEW. CONTRACTOR MUST COORDINATE WITH ALL TRADES AND VERIFY THE SIZE AND LOCATION OF ALL OPENINGS IN THE STRUCTURE PRIOR TO FABRICATION.

2. SEE ARCHITECTURAL AND SIGNAGE DRAWINGS FOR CONNECTION PLATE REQUIREMENTS AT PRE-MANUFACTURED SIGNS. PLATE SIZE, LOCATION AND FASTENERS FOR ALL SIGNAGE CONNECTIONS MUST BE INCLUDED IN THE STRUCTURAL STEEL SUBMITTAL FOR REVIEW. CONTRACTOR MUST COORDINATE AND VERIFY CONNECTION PLATE SIZE AND LOCATION PRIOR TO FABRICATION.

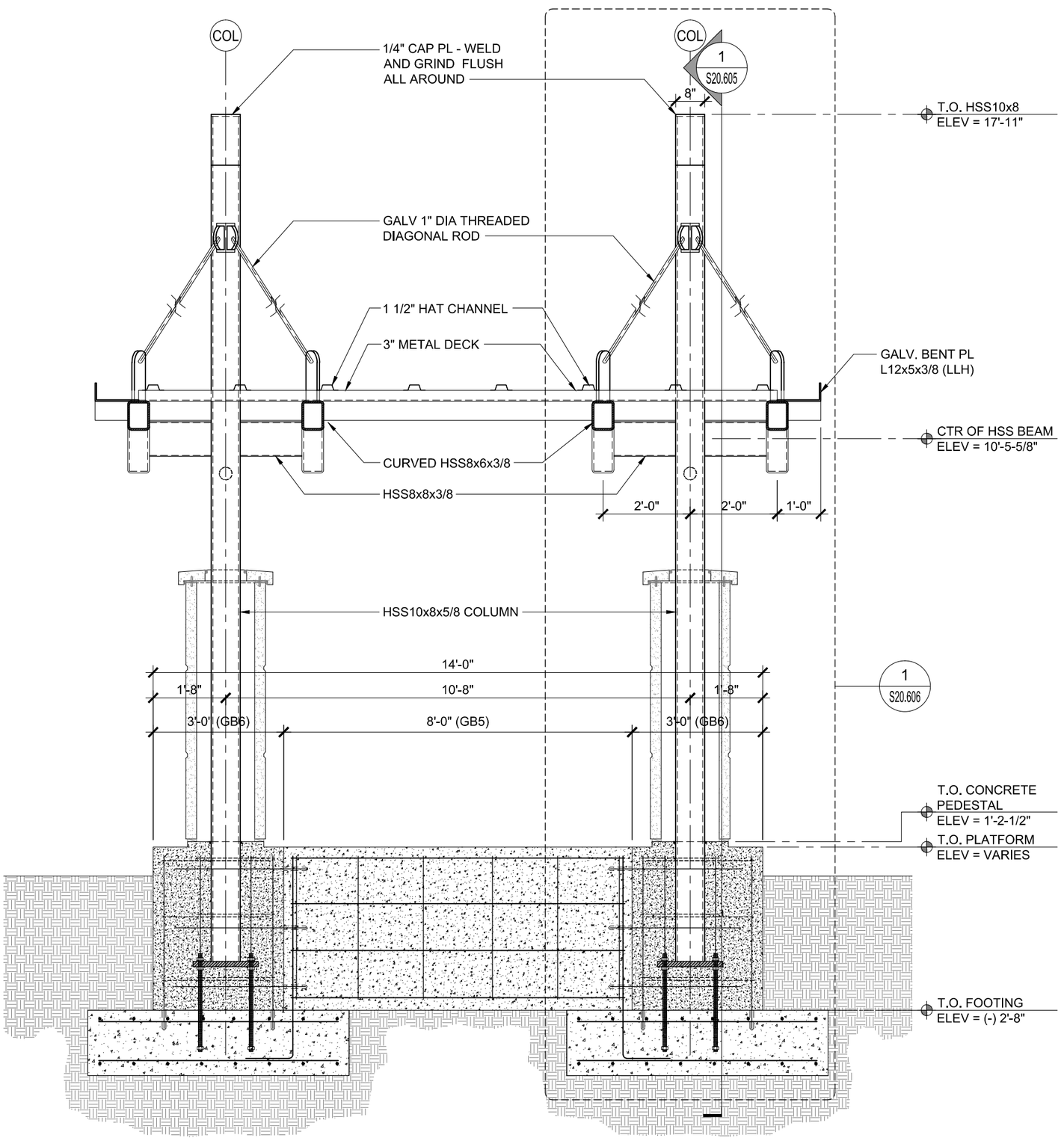

TYPICAL PLATFORM SECTION AT COLUMN - MINI-HIGH

SCALE: 3/8"=1'-0"

CANOPY A

1 / S20.607

DRAWING NO. S20.607

SHEET NO. 169

OVERALL SECTIONS

CENTRAL FLORIDA COMMUTER RAIL TRANSIT (CFCRT) PHASE 2 SOUTH

STATE OF FLORIDA
DEPARTMENT OF TRANSPORTATION

ROAD NO.	COUNTY	FINANCIAL PROJECT ID
CFRC P2S	VARIOUS	423446-9-52-01

McElroyEngineering
STRUCTURAL DESIGN GROUP
1635 EDGEWATER DRIVE ORLANDO, FL 32804
P: 407.245.8775 | F: 407.245.8744
www.mcelroyeng.com
CERTIFICATE OF AUTHORIZATION - 8822
CRAIG E. McELROY, P.E. NO. 44741

DESCRIPTION	BY	DATE

REVISIONS

DESCRIPTION	BY	DATE

Wed, 13 May 2015 11:41 am N:\VECOM\39\L01 CFCRT Phase 2 Amendment #5\CNGS\20_Details\39l01_S20.607.dwg

NOTICE: THE OFFICIAL RECORD OF THIS SHEET IS THE ELECTRONIC FILE SIGNED AND SEALED UNDER RULE 61G15-23.003, F.A.C.

STEEL PENETRATION NOTES:

1. SEE ARCHITECTURAL AND MEP DRAWINGS FOR CONDUIT AND PLUMBING PENETRATIONS THRU COLUMNS AND OTHER STRUCTURES. ALL PENETRATIONS MUST BE INCLUDED IN THE STRUCTURAL STEEL SUBMITTAL FOR REVIEW. CONTRACTOR MUST COORDINATE WITH ALL TRADES AND VERIFY THE SIZE AND LOCATION OF ALL OPENINGS IN THE STRUCTURE PRIOR TO FABRICATION.

2. SEE ARCHITECTURAL AND SIGNAGE DRAWINGS FOR CONNECTION PLATE REQUIREMENTS AT PRE-MANUFACTURED SIGNS. PLATE SIZE, LOCATION AND FASTENERS FOR ALL SIGNAGE CONNECTIONS MUST BE INCLUDED IN THE STRUCTURAL STEEL SUBMITTAL FOR REVIEW. CONTRACTOR MUST COORDINATE AND VERIFY CONNECTION PLATE SIZE AND LOCATION PRIOR TO FABRICATION.

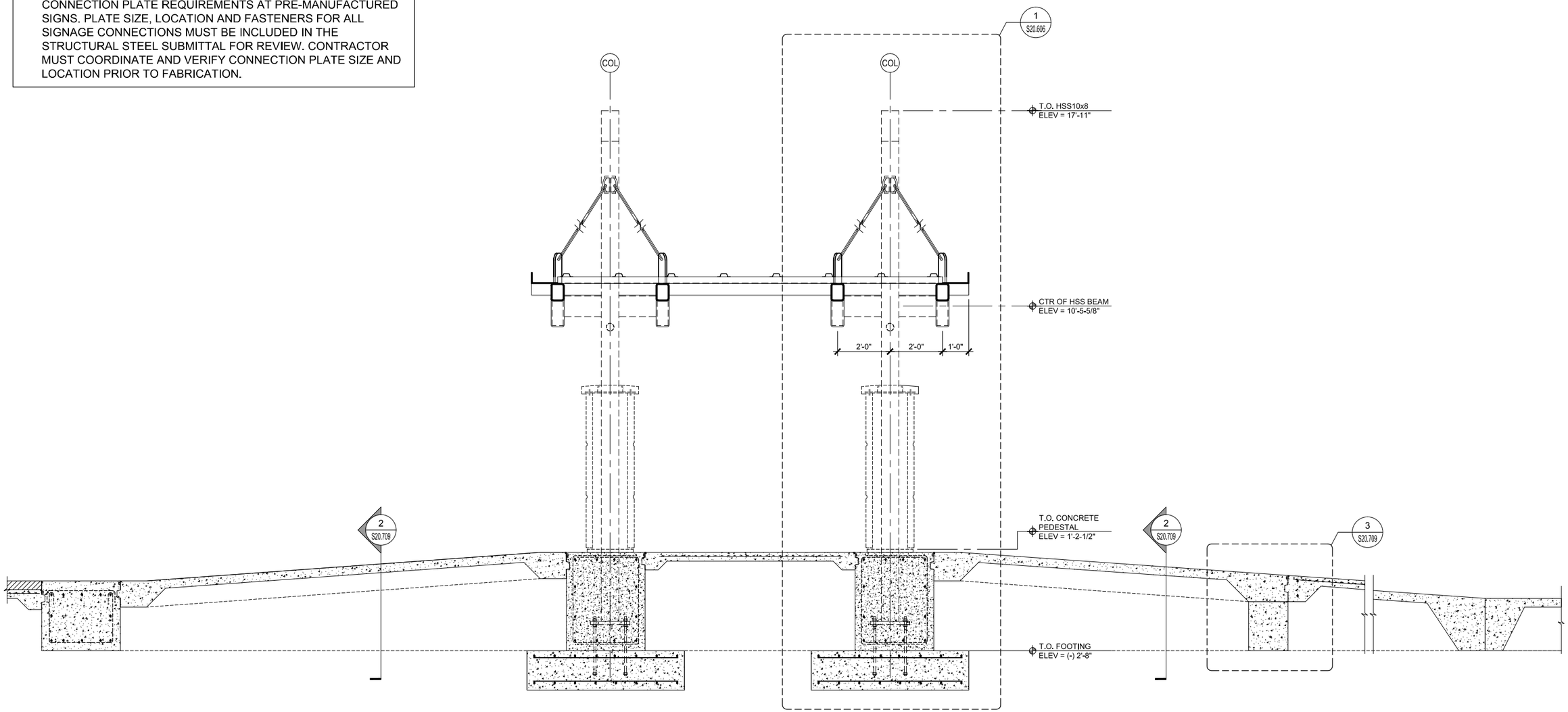

TYPICAL SECTION THRU TYPE "A" MINI-HIGH PLATFORM AND RAMPS

SCALE: 1/4"=1'-0"

1
S20.608

NOTICE: THE OFFICIAL RECORD OF THIS SHEET IS THE ELECTRONIC FILE SIGNED AND SEALED UNDER RULE 61G15-23.003, F.A.C.

REVISIONS					
DATE	BY	DESCRIPTION	DATE	BY	DESCRIPTION

McElroyEngineering
STRUCTURAL DESIGN GROUP
1835 EDGEWATER DR. ORLANDO, FL. 32804
P: 407.245.8775 | F: 407.245.8744
www.mcelroyeng.com
CERTIFICATE OF AUTHORIZATION - 8822
CRAIG E. McELROY, P.E. NO. 44741

STATE OF FLORIDA
DEPARTMENT OF TRANSPORTATION

ROAD NO.	COUNTY	FINANCIAL PROJECT ID
CFRC P2S	VARIOUS	423446-9-52-01

CENTRAL FLORIDA COMMUTER RAIL TRANSIT (CFCRT) PHASE 2 SOUTH

OVERALL SECTIONS

SHEET NO.
170

STEEL PENETRATION NOTES:

1. SEE ARCHITECTURAL AND MEP DRAWINGS FOR CONDUIT AND PLUMBING PENETRATIONS THRU COLUMNS AND OTHER STRUCTURES. ALL PENETRATIONS MUST BE INCLUDED IN THE STRUCTURAL STEEL SUBMITTAL FOR REVIEW. CONTRACTOR MUST COORDINATE WITH ALL TRADES AND VERIFY THE SIZE AND LOCATION OF ALL OPENINGS IN THE STRUCTURE PRIOR TO FABRICATION.

2. SEE ARCHITECTURAL AND SIGNAGE DRAWINGS FOR CONNECTION PLATE REQUIREMENTS AT PRE-MANUFACTURED SIGNS. PLATE SIZE, LOCATION AND FASTENERS FOR ALL SIGNAGE CONNECTIONS MUST BE INCLUDED IN THE STRUCTURAL STEEL SUBMITTAL FOR REVIEW. CONTRACTOR MUST COORDINATE AND VERIFY CONNECTION PLATE SIZE AND LOCATION PRIOR TO FABRICATION.

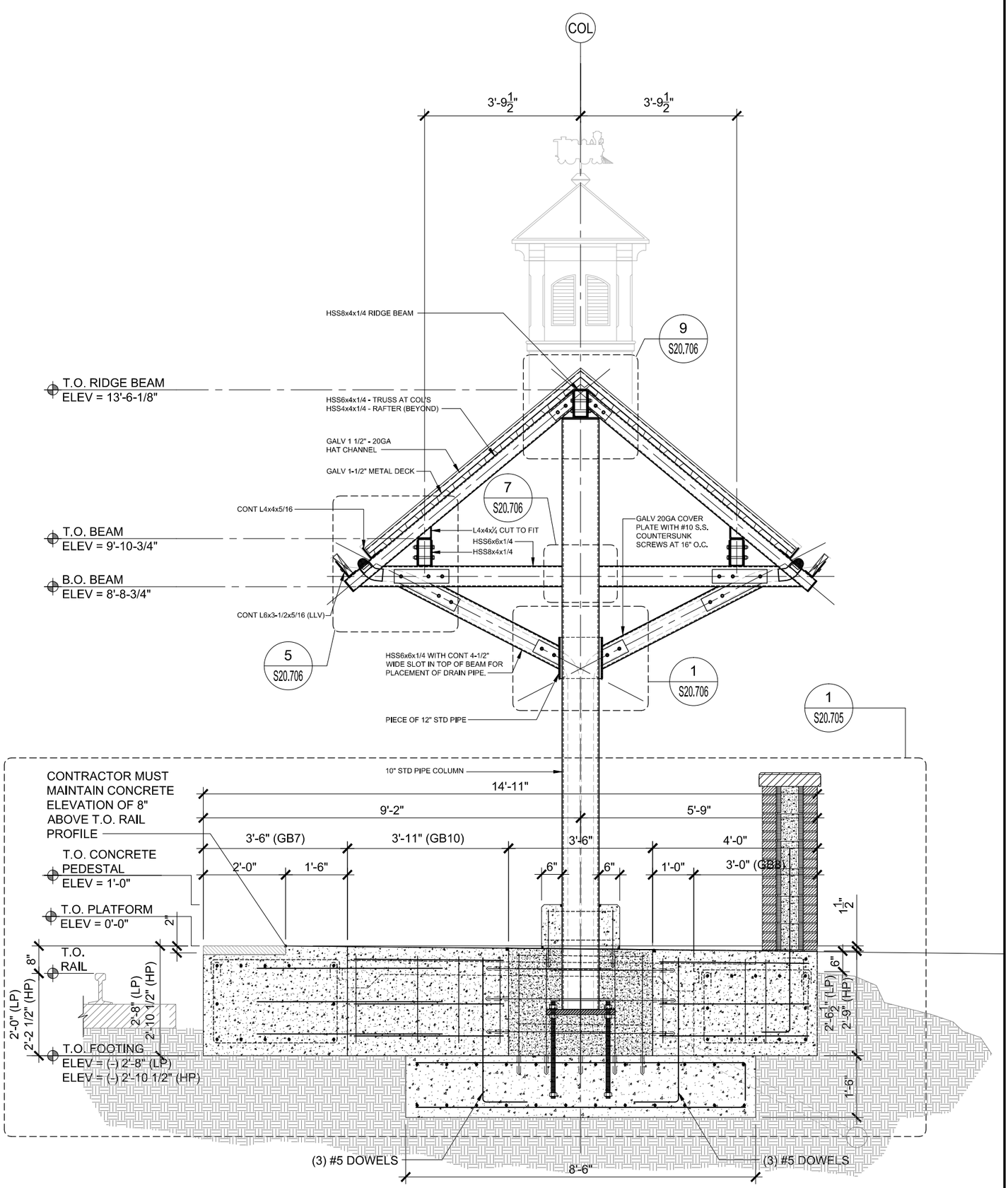

TYPICAL PLATFORM SECTION AT COLUMN

SCALE: 3/8"=1'-0"

CANOPY F

1
S20.609

DRAWING NO. S20.609

SHEET NO. 171

OVERALL SECTIONS

CENTRAL FLORIDA COMMUTER RAIL TRANSIT (CFCRT) PHASE 2 SOUTH

STATE OF FLORIDA
DEPARTMENT OF TRANSPORTATION

ROAD NO.	COUNTY	FINANCIAL PROJECT ID
CFRC P2S	OSCEOLA	423446-9-52-01

McElroyEngineering
STRUCTURAL DESIGN GROUP
1635 EDGEWATER DR. ORLANDO, FL 32804
P: 407.245.8775 | F: 407.245.8744
www.mcelroyeng.com

CERTIFICATE OF AUTHORIZATION - 8822
CRAIG E. McELROY, P.E. NO. 44741

DATE	BY	DESCRIPTION

REVISIONS

DATE	BY	DESCRIPTION

Wed, 13 May 2015 11:41 am N:\VECOM\39\LOI CFCRT Phase 2 Amendment #5\CNGS\20_Details\39I0I_S20.609.dwg

NOTICE: THE OFFICIAL RECORD OF THIS SHEET IS THE ELECTRONIC FILE SIGNED AND SEALED UNDER RULE 61G15-23.003, F.A.C.

STEEL PENETRATION NOTES:

1. SEE ARCHITECTURAL AND MEP DRAWINGS FOR CONDUIT AND PLUMBING PENETRATIONS THRU COLUMNS AND OTHER STRUCTURES. ALL PENETRATIONS MUST BE INCLUDED IN THE STRUCTURAL STEEL SUBMITTAL FOR REVIEW. CONTRACTOR MUST COORDINATE WITH ALL TRADES AND VERIFY THE SIZE AND LOCATION OF ALL OPENINGS IN THE STRUCTURE PRIOR TO FABRICATION.

2. SEE ARCHITECTURAL AND SIGNAGE DRAWINGS FOR CONNECTION PLATE REQUIREMENTS AT PRE-MANUFACTURED SIGNS. PLATE SIZE, LOCATION AND FASTENERS FOR ALL SIGNAGE CONNECTIONS MUST BE INCLUDED IN THE STRUCTURAL STEEL SUBMITTAL FOR REVIEW. CONTRACTOR MUST COORDINATE AND VERIFY CONNECTION PLATE SIZE AND LOCATION PRIOR TO FABRICATION.

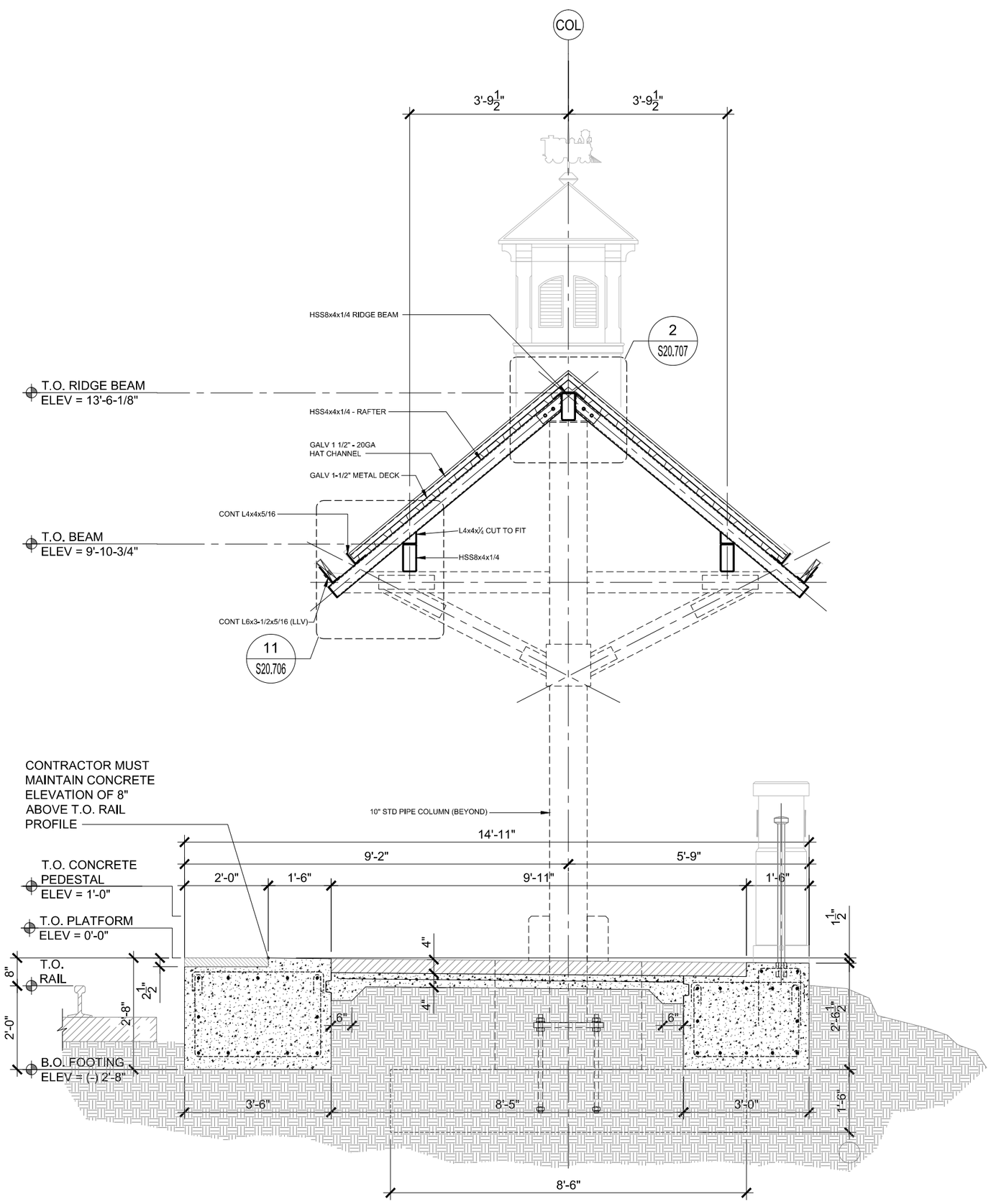

TYPICAL PLATFORM SECTION BETWEEN COLUMNS

SCALE: 3/8"=1'-0"

CANOPY F

1
S20.610

DRAWING NO. S20.60

SHEET NO. 172

CENTRAL FLORIDA COMMUTER RAIL TRANSIT (CFCRT) PHASE 2 SOUTH

OVERALL SECTIONS

423446-9-52-01 | FINANCIAL PROJECT ID | OSCEOLA | COUNTY | CFRC P2S | ROAD NO.

STATE OF FLORIDA
DEPARTMENT OF TRANSPORTATION

McElroyEngineering
STRUCTURAL DESIGN GROUP
1635 EDGEWATER DR. ORLANDO, FL 32804
P: 407.245.8775 | F: 407.245.8744
www.mcelroyeng.com
CERTIFICATE OF AUTHORIZATION - 8822
CRAIG E. McELROY, P.E. NO. 44741

REVISIONS

DATE	BY	DESCRIPTION

DATE	BY	DESCRIPTION

Wed, 13 May 2015 11:42 am N:\AECOM\39II_01 CFCRT Phase 2 Amendment #5\CNGS\20_Details\39II01_S20.60.dwg

NOTICE: THE OFFICIAL RECORD OF THIS SHEET IS THE ELECTRONIC FILE SIGNED AND SEALED UNDER RULE 61G15-23.003, F.A.C.

STEEL PENETRATION NOTES:

1. SEE ARCHITECTURAL AND MEP DRAWINGS FOR CONDUIT AND PLUMBING PENETRATIONS THRU COLUMNS AND OTHER STRUCTURES. ALL PENETRATIONS MUST BE INCLUDED IN THE STRUCTURAL STEEL SUBMITTAL FOR REVIEW. CONTRACTOR MUST COORDINATE WITH ALL TRADES AND VERIFY THE SIZE AND LOCATION OF ALL OPENINGS IN THE STRUCTURE PRIOR TO FABRICATION.

2. SEE ARCHITECTURAL AND SIGNAGE DRAWINGS FOR CONNECTION PLATE REQUIREMENTS AT PRE-MANUFACTURED SIGNS. PLATE SIZE, LOCATION AND FASTENERS FOR ALL SIGNAGE CONNECTIONS MUST BE INCLUDED IN THE STRUCTURAL STEEL SUBMITTAL FOR REVIEW. CONTRACTOR MUST COORDINATE AND VERIFY CONNECTION PLATE SIZE AND LOCATION PRIOR TO FABRICATION.

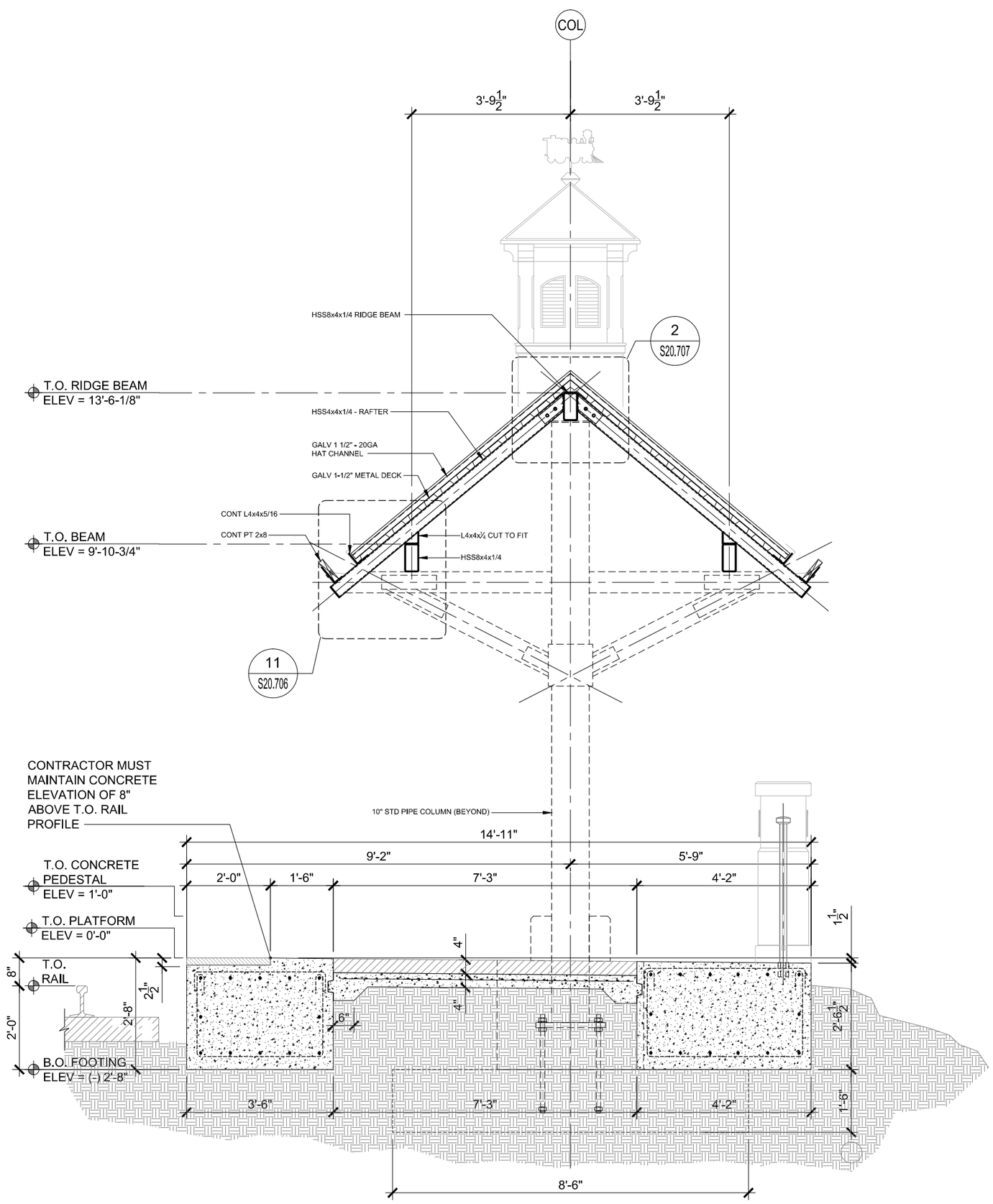

TYPICAL PLATFORM SECTION BETWEEN COLUMNS

SCALE: 3/8"=1'-0"

CANOPY F

1
S20.611

DRAWING NO. S20.611

REVISIONS

DATE	BY	DESCRIPTION	DATE	BY	DESCRIPTION

McElroyEngineering
STRUCTURAL DESIGN GROUP
1835 EDGEWATER DR. ORLANDO, FL. 32804
P: 407.245.8775 | F: 407.245.8744
www.mcelroyeng.com
CERTIFICATE OF AUTHORIZATION - 8822
CRAIG E. McELROY, P.E. NO. 44741

STATE OF FLORIDA
DEPARTMENT OF TRANSPORTATION

ROAD NO.	COUNTY	FINANCIAL PROJECT ID
CFRC P2S	OSCEOLA	423446-9-52-01

CENTRAL FLORIDA COMMUTER RAIL TRANSIT (CFCRT) PHASE 2 SOUTH

OVERALL SECTIONS

SHEET NO. 173

Wed, 13 May 2015 11:42 am N:\AECOM\39II_01 CFCRT Phase 2 Amendment #5\DWGS\20_Details\39II01_S20.611.dwg

NOTICE: THE OFFICIAL RECORD OF THIS SHEET IS THE ELECTRONIC FILE SIGNED AND SEALED UNDER RULE 61G15-23.003, F.A.C.

STEEL PENETRATION NOTES:

1. SEE ARCHITECTURAL AND MEP DRAWINGS FOR CONDUIT AND PLUMBING PENETRATIONS THRU COLUMNS AND OTHER STRUCTURES. ALL PENETRATIONS MUST BE INCLUDED IN THE STRUCTURAL STEEL SUBMITTAL FOR REVIEW. CONTRACTOR MUST COORDINATE WITH ALL TRADES AND VERIFY THE SIZE AND LOCATION OF ALL OPENINGS IN THE STRUCTURE PRIOR TO FABRICATION.

2. SEE ARCHITECTURAL AND SIGNAGE DRAWINGS FOR CONNECTION PLATE REQUIREMENTS AT PRE-MANUFACTURED SIGNS. PLATE SIZE, LOCATION AND FASTENERS FOR ALL SIGNAGE CONNECTIONS MUST BE INCLUDED IN THE STRUCTURAL STEEL SUBMITTAL FOR REVIEW. CONTRACTOR MUST COORDINATE AND VERIFY CONNECTION PLATE SIZE AND LOCATION PRIOR TO FABRICATION.

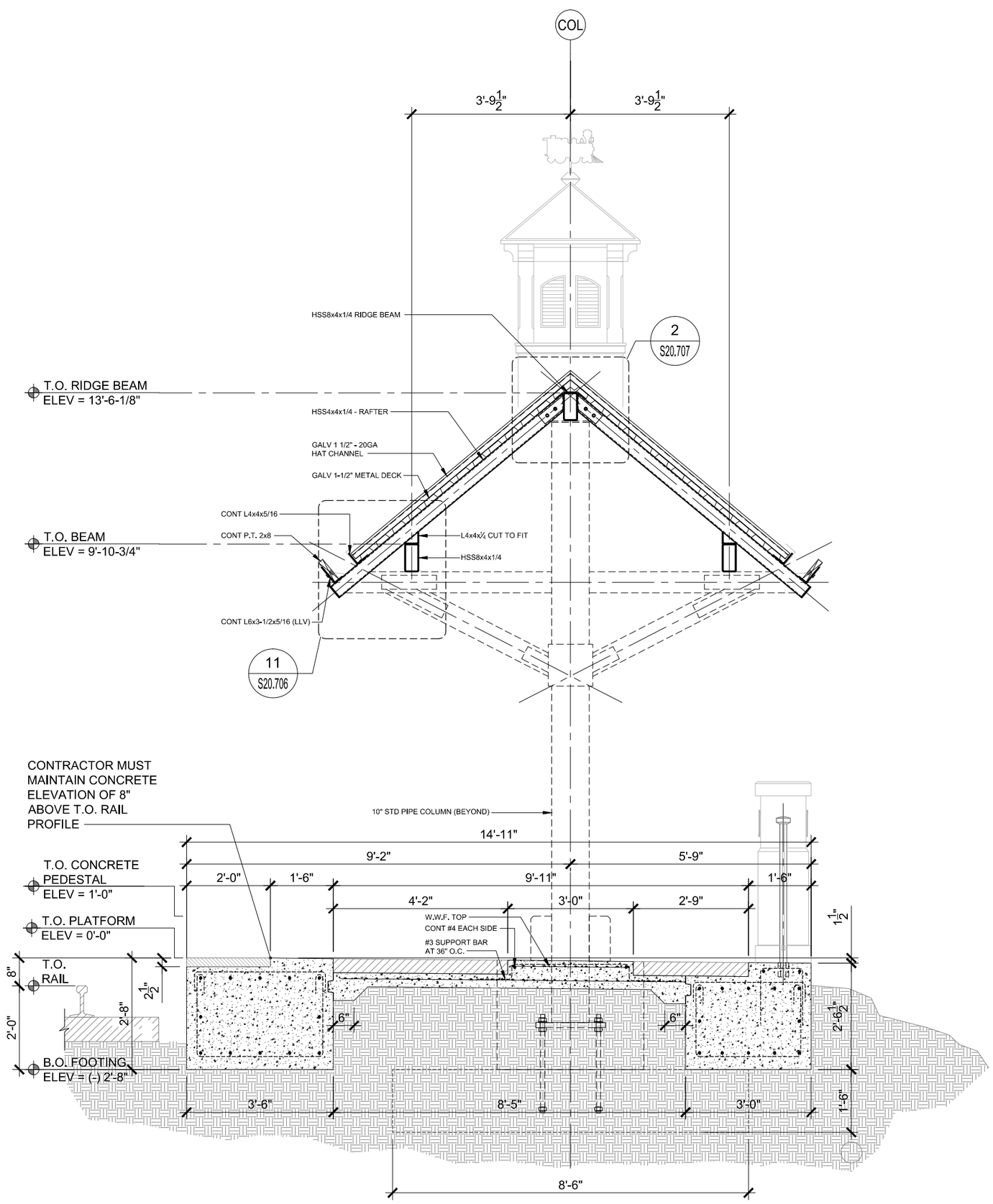

TYPICAL PLATFORM SECTION BETWEEN COLUMNS

SCALE: 3/8"=1'-0"

CANOPY F

1
S20.612

DRAWING NO. S20.612

SHEET NO. 174

CENTRAL FLORIDA COMMUTER RAIL TRANSIT (CFCRT) PHASE 2 SOUTH

OVERALL SECTIONS

STATE OF FLORIDA
DEPARTMENT OF TRANSPORTATION

ROAD NO.	COUNTY	FINANCIAL PROJECT ID
CFRC P2S	OSCEOLA	423446-9-52-01

McElroyEngineering
STRUCTURAL DESIGN GROUP
1635 EDGEWATER DRIVE, ORLANDO, FL 32804
P: 407.245.8775 | F: 407.245.8744
www.mcelroyeng.com
CERTIFICATE OF AUTHORIZATION - 8822
CRAIG E. McELROY, P.E. NO. 44741

REVISIONS

DATE	BY	DESCRIPTION

DATE	BY	DESCRIPTION

Wed, 13 May 2015 11:42 am N:\AECOM\39\LDI CFCRT Phase 2 Amendment #5\DWGS\20_Details\39l0l_S20.612.dwg

NOTICE: THE OFFICIAL RECORD OF THIS SHEET IS THE ELECTRONIC FILE SIGNED AND SEALED UNDER RULE 61G15-23.003, F.A.C.

STEEL PENETRATION NOTES:

1. SEE ARCHITECTURAL AND MEP DRAWINGS FOR CONDUIT AND PLUMBING PENETRATIONS THRU COLUMNS AND OTHER STRUCTURES. ALL PENETRATIONS MUST BE INCLUDED IN THE STRUCTURAL STEEL SUBMITTAL FOR REVIEW. CONTRACTOR MUST COORDINATE WITH ALL TRADES AND VERIFY THE SIZE AND LOCATION OF ALL OPENINGS IN THE STRUCTURE PRIOR TO FABRICATION.

2. SEE ARCHITECTURAL AND SIGNAGE DRAWINGS FOR CONNECTION PLATE REQUIREMENTS AT PRE-MANUFACTURED SIGNS. PLATE SIZE, LOCATION AND FASTENERS FOR ALL SIGNAGE CONNECTIONS MUST BE INCLUDED IN THE STRUCTURAL STEEL SUBMITTAL FOR REVIEW. CONTRACTOR MUST COORDINATE AND VERIFY CONNECTION PLATE SIZE AND LOCATION PRIOR TO FABRICATION.

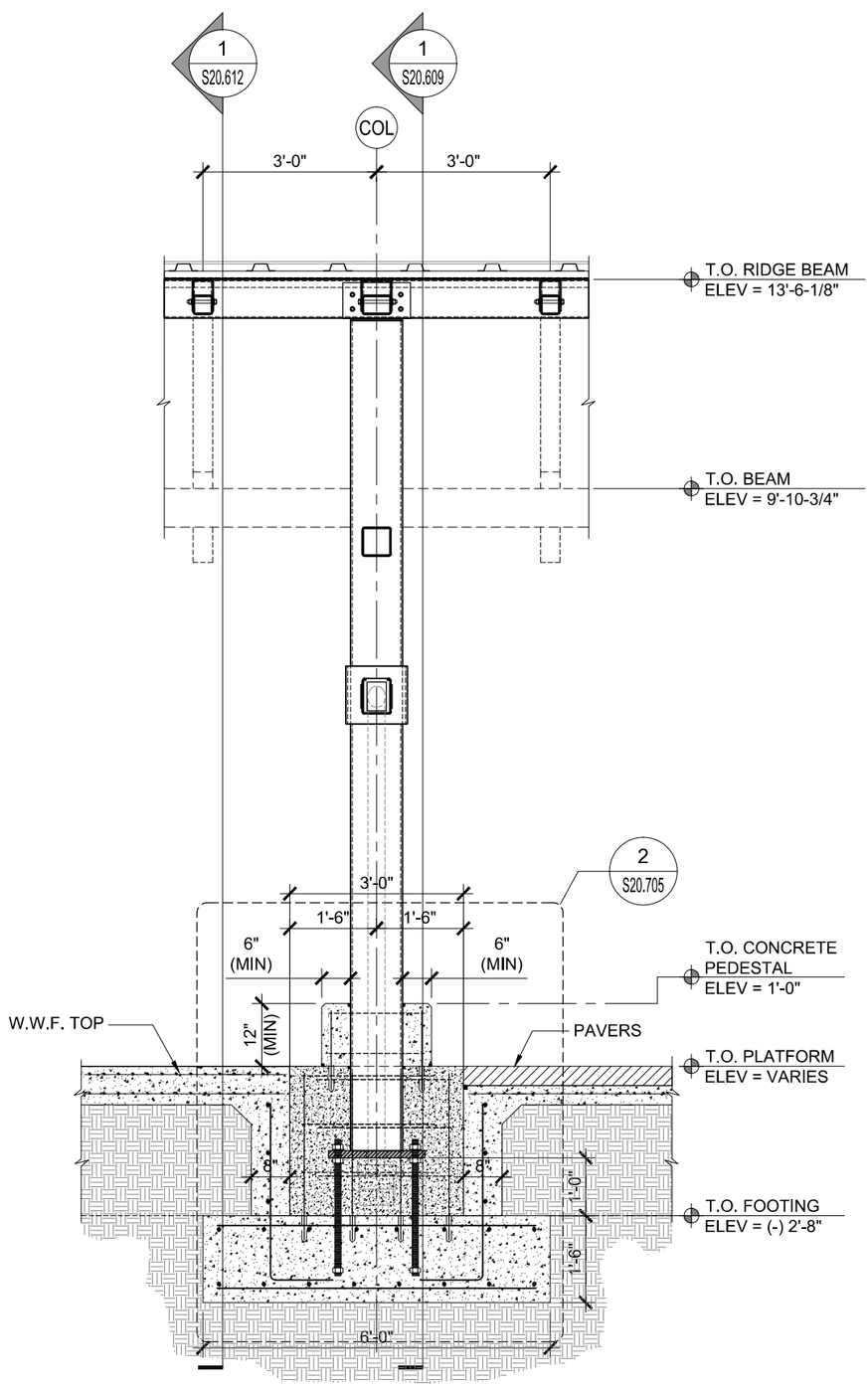

TYPICAL PLATFORM SECTION AT COLUMN

SCALE: 3/8"=1'-0"

CANOPY F

1
S20.613

REVISIONS			
DESCRIPTION	BY	DATE	
DESCRIPTION	BY	DATE	

McElroyEngineering
STRUCTURAL DESIGN GROUP
1635 EDGEWATER DR. ORLANDO, FL. 32804
P: 407.245.8775 | F: 407.245.8744
www.mcelroyeng.com

CERTIFICATE OF AUTHORIZATION - 8822
CRAIG E. McELROY, P.E. NO. 44741

STATE OF FLORIDA
DEPARTMENT OF TRANSPORTATION

ROAD NO.	COUNTY	FINANCIAL PROJECT ID
CFRC P2S	OSCEOLA	423446-9-52-01

CENTRAL FLORIDA COMMUTER RAIL TRANSIT (CFCRT) PHASE 2 SOUTH

OVERALL SECTIONS

SHEET NO. 175

DRAWING NO. S20.613

Wed, 13 May 2015 11:43 am N:\AECOM\391_01 CFCRT Phase 2 Amendment #5\CNGS\20_Details\391_S20.613.dwg

NOTICE: THE OFFICIAL RECORD OF THIS SHEET IS THE ELECTRONIC FILE SIGNED AND SEALED UNDER RULE 61G15-23.003, F.A.C.

STEEL PENETRATION NOTES:

1. SEE ARCHITECTURAL AND MEP DRAWINGS FOR CONDUIT AND PLUMBING PENETRATIONS THRU COLUMNS AND OTHER STRUCTURES. ALL PENETRATIONS MUST BE INCLUDED IN THE STRUCTURAL STEEL SUBMITTAL FOR REVIEW. CONTRACTOR MUST COORDINATE WITH ALL TRADES AND VERIFY THE SIZE AND LOCATION OF ALL OPENINGS IN THE STRUCTURE PRIOR TO FABRICATION.

2. SEE ARCHITECTURAL AND SIGNAGE DRAWINGS FOR CONNECTION PLATE REQUIREMENTS AT PRE-MANUFACTURED SIGNS. PLATE SIZE, LOCATION AND FASTENERS FOR ALL SIGNAGE CONNECTIONS MUST BE INCLUDED IN THE STRUCTURAL STEEL SUBMITTAL FOR REVIEW. CONTRACTOR MUST COORDINATE AND VERIFY CONNECTION PLATE SIZE AND LOCATION PRIOR TO FABRICATION.

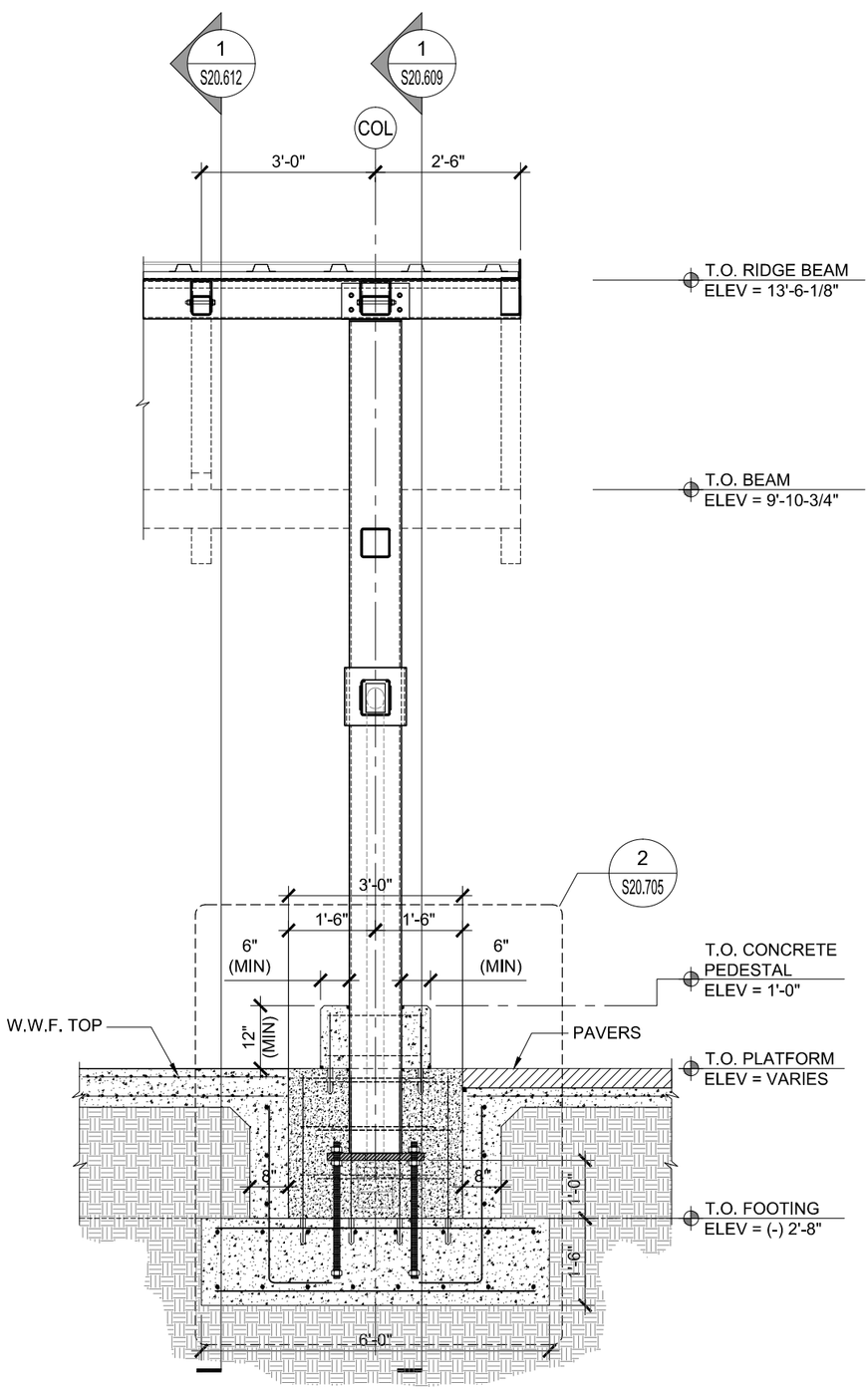

TYPICAL PLATFORM SECTION AT COLUMN - END CONDITION

SCALE: 3/8"=1'-0"

CANOPY F

1 / S20.614

DATE	BY	DESCRIPTION

REVISIONS

DATE	BY	DESCRIPTION

McElroyEngineering
STRUCTURAL DESIGN GROUP
1635 EDGEWATER DR. ORLANDO, FL. 32804
P: 407.245.8775 | F: 407.245.8744
www.mcelroyeng.com
CERTIFICATE OF AUTHORIZATION - 8822
CRAIG E. McELROY, P.E. NO. 44741

STATE OF FLORIDA
DEPARTMENT OF TRANSPORTATION

ROAD NO.	COUNTY	FINANCIAL PROJECT ID
CFRC P2S	OSCEOLA	423446-9-52-01

CENTRAL FLORIDA COMMUTER RAIL TRANSIT (CFCRT) PHASE 2 SOUTH

OVERALL SECTIONS

SHEET NO. 176

DRAWING NO. S20.614

Wed, 13 May 2015 11:43 am N:\AECOM\391_01 CFCRT Phase 2 Amendment #5\CNGS\20_Details\391_S20.614.dwg

NOTICE: THE OFFICIAL RECORD OF THIS SHEET IS THE ELECTRONIC FILE SIGNED AND SEALED UNDER RULE 61G15-23.003, F.A.C.

STEEL PENETRATION NOTES:

1. SEE ARCHITECTURAL AND MEP DRAWINGS FOR CONDUIT AND PLUMBING PENETRATIONS THRU COLUMNS AND OTHER STRUCTURES. ALL PENETRATIONS MUST BE INCLUDED IN THE STRUCTURAL STEEL SUBMITTAL FOR REVIEW. CONTRACTOR MUST COORDINATE WITH ALL TRADES AND VERIFY THE SIZE AND LOCATION OF ALL OPENINGS IN THE STRUCTURE PRIOR TO FABRICATION.

2. SEE ARCHITECTURAL AND SIGNAGE DRAWINGS FOR CONNECTION PLATE REQUIREMENTS AT PRE-MANUFACTURED SIGNS. PLATE SIZE, LOCATION AND FASTENERS FOR ALL SIGNAGE CONNECTIONS MUST BE INCLUDED IN THE STRUCTURAL STEEL SUBMITTAL FOR REVIEW. CONTRACTOR MUST COORDINATE AND VERIFY CONNECTION PLATE SIZE AND LOCATION PRIOR TO FABRICATION.

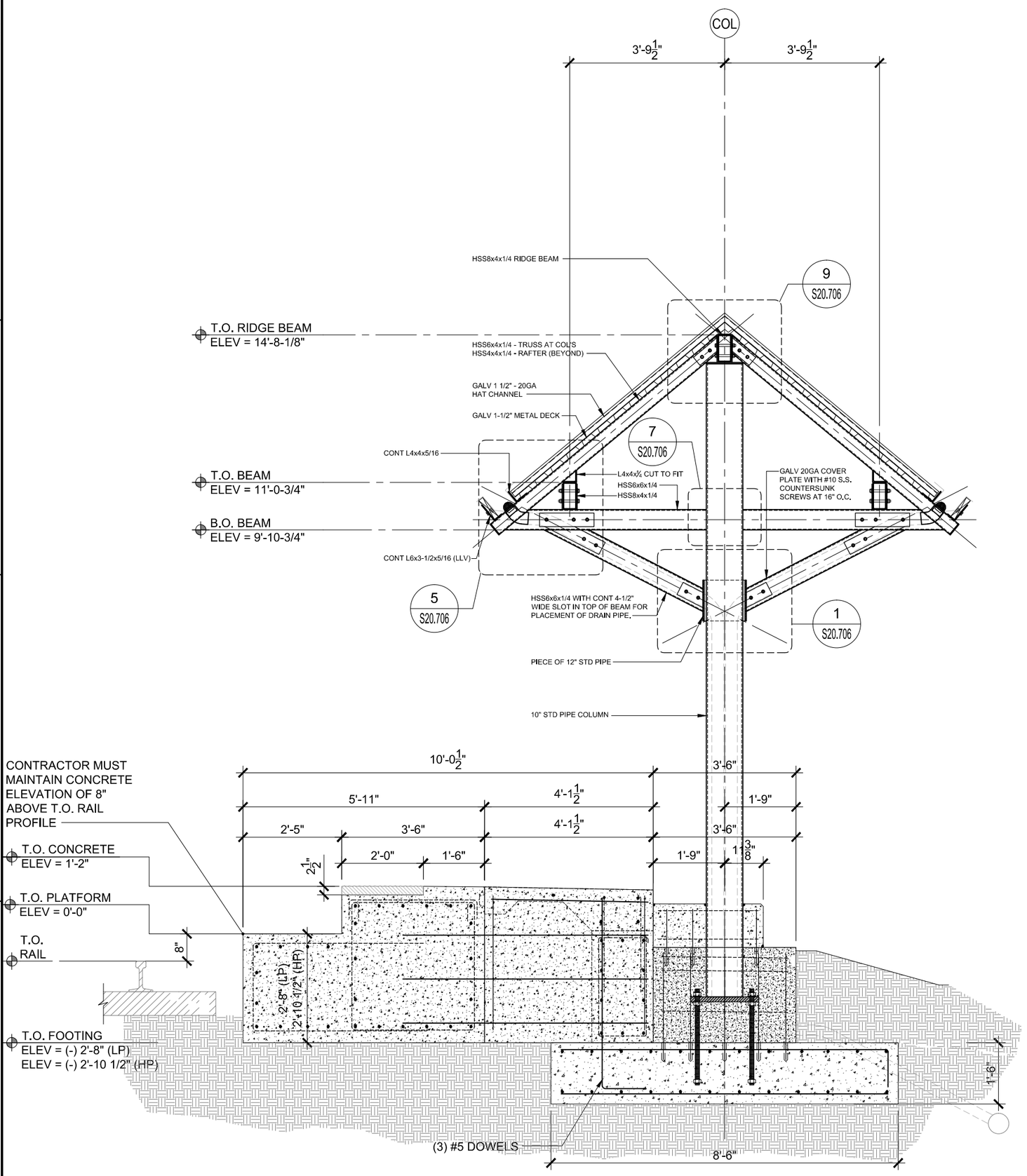

TYPICAL PLATFORM SECTION AT COLUMN - MINI-HIGH

SCALE: 3/8"=1'-0"

CANOPY F

1
S20.615

DRAWING NO. S20.615

REVISIONS

DESCRIPTION	DATE	BY

McElroyEngineering
STRUCTURAL DESIGN GROUP
1635 EDGEWATER DR. ORLANDO, FL 32804
P: 407.245.8775 | F: 407.245.8744
www.mcelroyeng.com
CERTIFICATE OF AUTHORIZATION - 8822
CRAIG E. McELROY, P.E. NO. 44741

STATE OF FLORIDA
DEPARTMENT OF TRANSPORTATION

ROAD NO.	COUNTY	FINANCIAL PROJECT ID
CFRC P2S	OSCEOLA	423446-9-52-01

CENTRAL FLORIDA COMMUTER RAIL TRANSIT (CFCRT) PHASE 2 SOUTH

OVERALL SECTIONS

SHEET NO. 177

Wed, 13 May 2015 11:43 am N:\AECOM\39\LDI CFCRT Phase 2 Amendment #5\CNGS\20_Details\39I0I_S20.615.dwg

NOTICE: THE OFFICIAL RECORD OF THIS SHEET IS THE ELECTRONIC FILE SIGNED AND SEALED UNDER RULE 61G15-23.003, F.A.C.

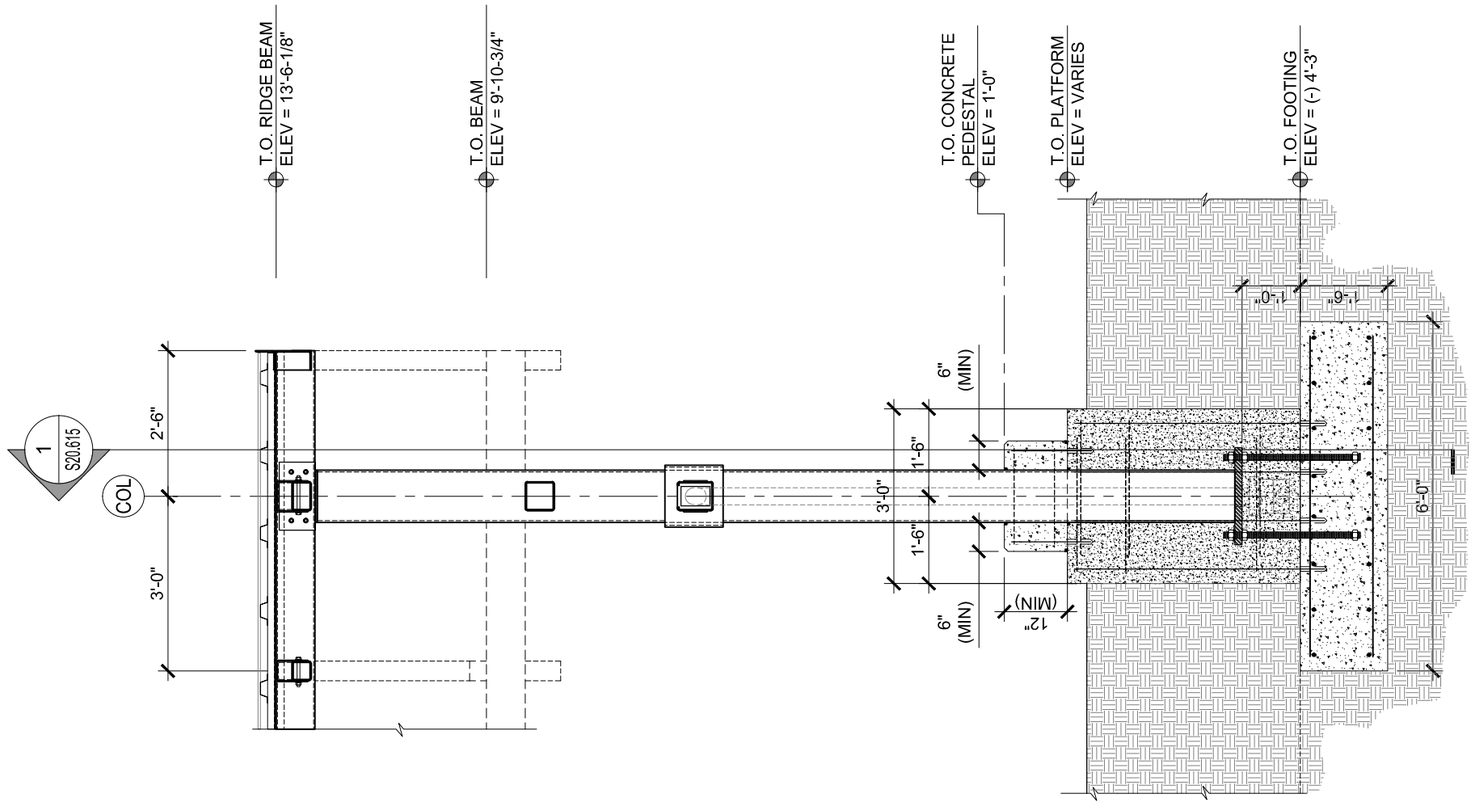

TYPICAL PLATFORM SECTION AT COLUMN - MINI-HIGH

CANOPY F

1 S20.616

SCALE: 3/8"=1'-0"

STEEL PENETRATION NOTES:

1. SEE ARCHITECTURAL AND MEP DRAWINGS FOR CONDUIT AND PLUMBING PENETRATIONS THRU COLUMNS AND OTHER STRUCTURES. ALL PENETRATIONS MUST BE INCLUDED IN THE STRUCTURAL STEEL SUBMITTAL FOR REVIEW. CONTRACTOR MUST COORDINATE WITH ALL TRADES AND VERIFY THE SIZE AND LOCATION OF ALL OPENINGS IN THE STRUCTURE PRIOR TO FABRICATION.
2. SEE ARCHITECTURAL AND SIGNAGE DRAWINGS FOR CONNECTION PLATE REQUIREMENTS AT PRE-MANUFACTURED SIGNS. PLATE SIZE, LOCATION AND FASTENERS FOR ALL SIGNAGE CONNECTIONS MUST BE INCLUDED IN THE STRUCTURAL STEEL SUBMITTAL FOR REVIEW. CONTRACTOR MUST COORDINATE AND VERIFY CONNECTION PLATE SIZE AND LOCATION PRIOR TO FABRICATION.

NOTICE: THE OFFICIAL RECORD OF THIS SHEET IS THE ELECTRONIC FILE SIGNED AND SEALED UNDER RULE 61G15-23.003, F.A.C.

REVISIONS					
DATE	BY	DESCRIPTION	DATE	BY	DESCRIPTION

McElroyEngineering
STRUCTURAL DESIGN GROUP
1835 EDGEWATER DR. ORLANDO, FL. 32804
P: 407.245.8775 | F: 407.245.8744
www.mcelroyeng.com
CERTIFICATE OF AUTHORIZATION - 8822
CRAIG E. McELROY, P.E. NO. 44741

STATE OF FLORIDA
DEPARTMENT OF TRANSPORTATION

ROAD NO.	COUNTY	FINANCIAL PROJECT ID
CFRC P2S	OSCEOLA	423446-9-52-01

CENTRAL FLORIDA COMMUTER RAIL TRANSIT (CFCRT) PHASE 2 SOUTH

OVERALL SECTIONS

SHEET NO. 178

STEEL PENETRATION NOTES:

1. SEE ARCHITECTURAL AND MEP DRAWINGS FOR CONDUIT AND PLUMBING PENETRATIONS THRU COLUMNS AND OTHER STRUCTURES. ALL PENETRATIONS MUST BE INCLUDED IN THE STRUCTURAL STEEL SUBMITTAL FOR REVIEW. CONTRACTOR MUST COORDINATE WITH ALL TRADES AND VERIFY THE SIZE AND LOCATION OF ALL OPENINGS IN THE STRUCTURE PRIOR TO FABRICATION.

2. SEE ARCHITECTURAL AND SIGNAGE DRAWINGS FOR CONNECTION PLATE REQUIREMENTS AT PRE-MANUFACTURED SIGNS. PLATE SIZE, LOCATION AND FASTENERS FOR ALL SIGNAGE CONNECTIONS MUST BE INCLUDED IN THE STRUCTURAL STEEL SUBMITTAL FOR REVIEW. CONTRACTOR MUST COORDINATE AND VERIFY CONNECTION PLATE SIZE AND LOCATION PRIOR TO FABRICATION.

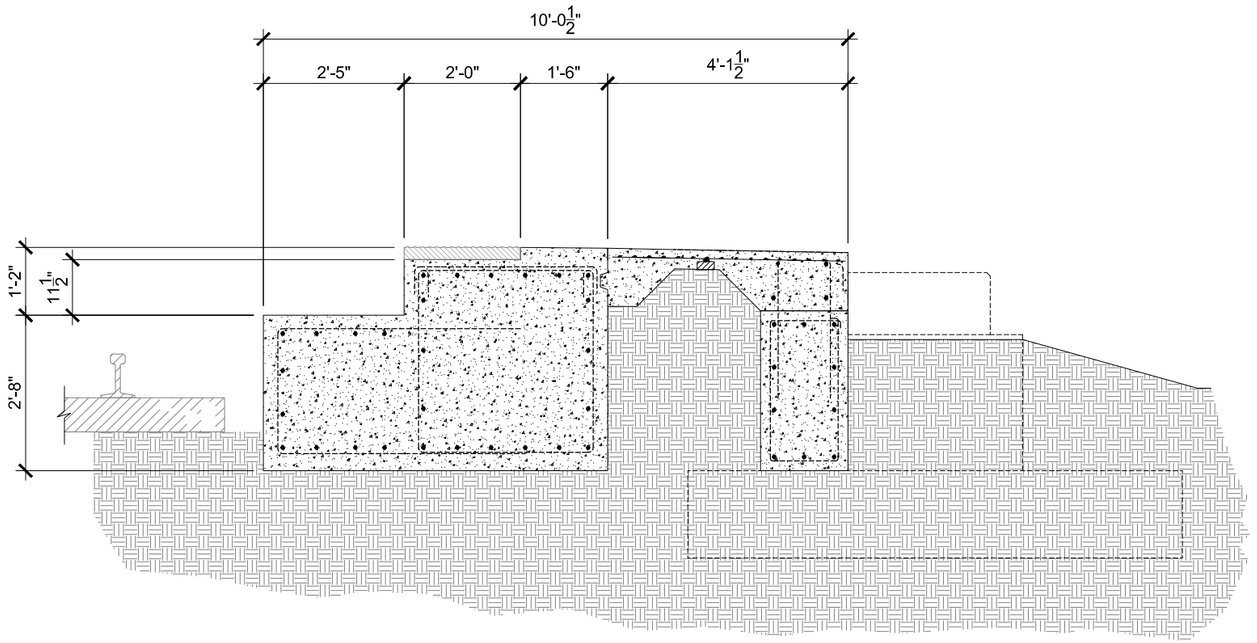

TYPICAL PLATFORM SECTION BETWEEN COLUMNS - MINI-HIGH

1
S20.617

SCALE: 3/8"=1'-0"

CANOPY F

REVISIONS					
DATE	BY	DESCRIPTION	DATE	BY	DESCRIPTION

McElroyEngineering
STRUCTURAL DESIGN GROUP
1835 EDGEWATER DR. ORLANDO, FL. 32804
P: 407.245.8775 | F: 407.245.8744
www.mcelroyeng.com
CERTIFICATE OF AUTHORIZATION - 8822
CRAIG E. McELROY, P.E. NO. 44741

STATE OF FLORIDA
DEPARTMENT OF TRANSPORTATION

ROAD NO.	COUNTY	FINANCIAL PROJECT ID
CFRC P2S	OSCEOLA	423446-9-52-01

CENTRAL FLORIDA COMMUTER RAIL TRANSIT (CFCRT) PHASE 2 SOUTH

OVERALL SECTIONS

SHEET NO.
179

NOTICE: THE OFFICIAL RECORD OF THIS SHEET IS THE ELECTRONIC FILE SIGNED AND SEALED UNDER RULE 61G15-23.003, F.A.C.

STEEL PENETRATION NOTES:

1. SEE ARCHITECTURAL AND MEP DRAWINGS FOR CONDUIT AND PLUMBING PENETRATIONS THRU COLUMNS AND OTHER STRUCTURES. ALL PENETRATIONS MUST BE INCLUDED IN THE STRUCTURAL STEEL SUBMITTAL FOR REVIEW. CONTRACTOR MUST COORDINATE WITH ALL TRADES AND VERIFY THE SIZE AND LOCATION OF ALL OPENINGS IN THE STRUCTURE PRIOR TO FABRICATION.

2. SEE ARCHITECTURAL AND SIGNAGE DRAWINGS FOR CONNECTION PLATE REQUIREMENTS AT PRE-MANUFACTURED SIGNS. PLATE SIZE, LOCATION AND FASTENERS FOR ALL SIGNAGE CONNECTIONS MUST BE INCLUDED IN THE STRUCTURAL STEEL SUBMITTAL FOR REVIEW. CONTRACTOR MUST COORDINATE AND VERIFY CONNECTION PLATE SIZE AND LOCATION PRIOR TO FABRICATION.

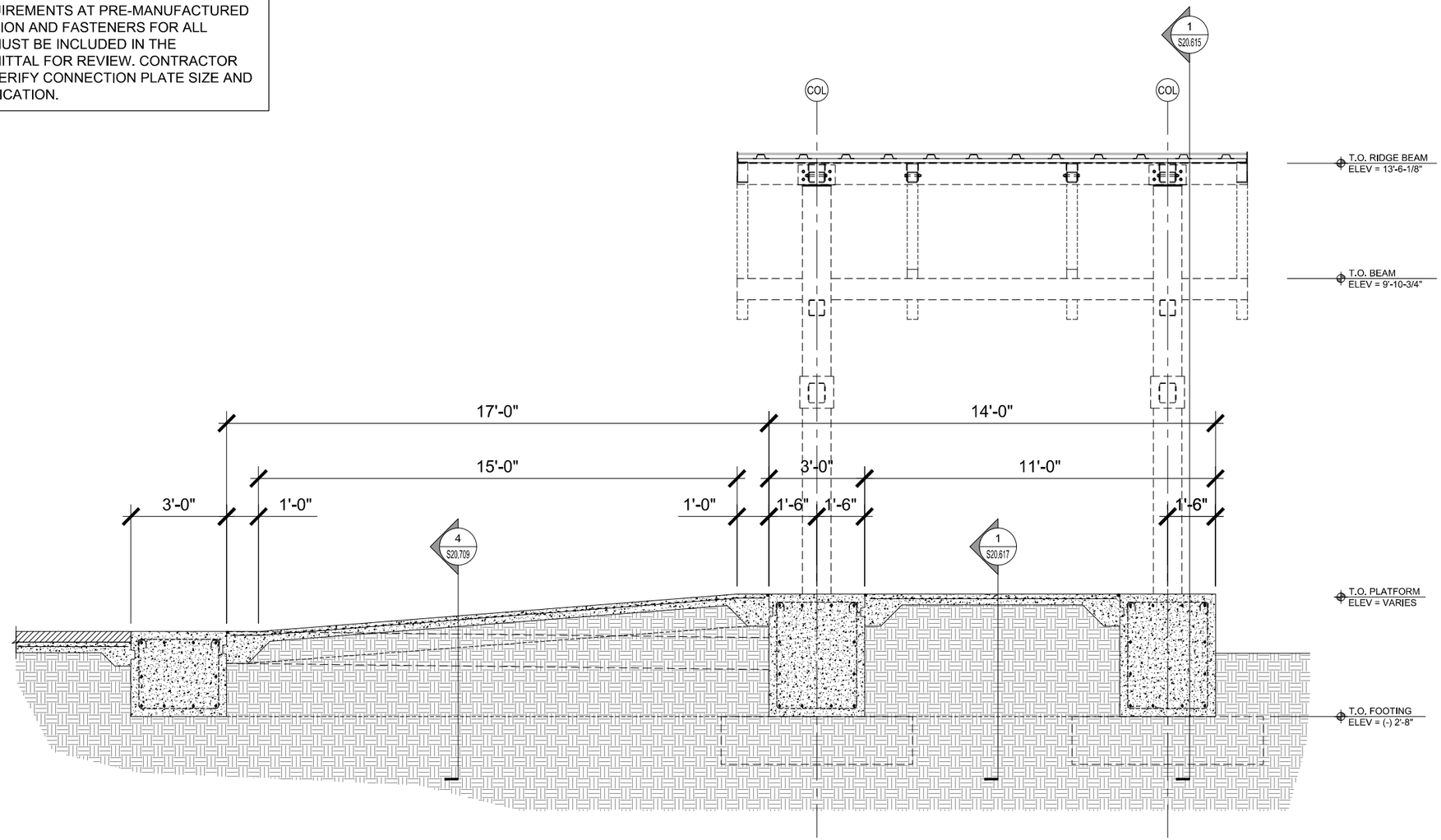

TYPICAL SECTION THRU TYPE "F" MINI-HIGH PLATFORM AND RAMP

SCALE: 1/4"=1'-0"

1
S20.618

REVISIONS					
DATE	BY	DESCRIPTION	DATE	BY	DESCRIPTION

McElroyEngineering
STRUCTURAL DESIGN GROUP
1835 EDGEWATER DR. ORLANDO, FL. 32804
P: 407.245.8775 | F: 407.245.8744
www.mcelroyeng.com
CERTIFICATE OF AUTHORIZATION - 8822
CRAIG E. McELROY, P.E. NO. 44741

STATE OF FLORIDA
DEPARTMENT OF TRANSPORTATION

ROAD NO.	COUNTY	FINANCIAL PROJECT ID
CFRC P2S	OSCEOLA	423446-9-52-01

CENTRAL FLORIDA COMMUTER RAIL TRANSIT (CFCRT) PHASE 2 SOUTH

OVERALL SECTIONS

SHEET NO.
180

NOTICE: THE OFFICIAL RECORD OF THIS SHEET IS THE ELECTRONIC FILE SIGNED AND SEALED UNDER RULE 61G15-23.003, F.A.C.

DRAWING NO.
S20.701

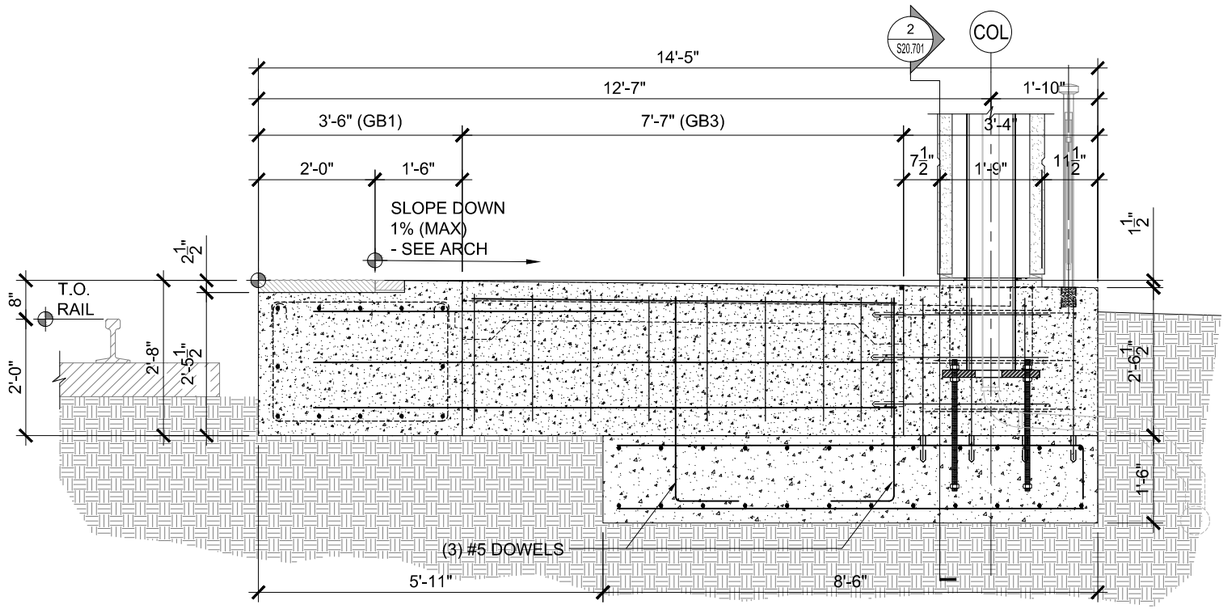

TYPICAL PLATFORM SECTION AT COLUMN

SCALE: 3/8"=1'-0" CANOPY A — 1 S20.701

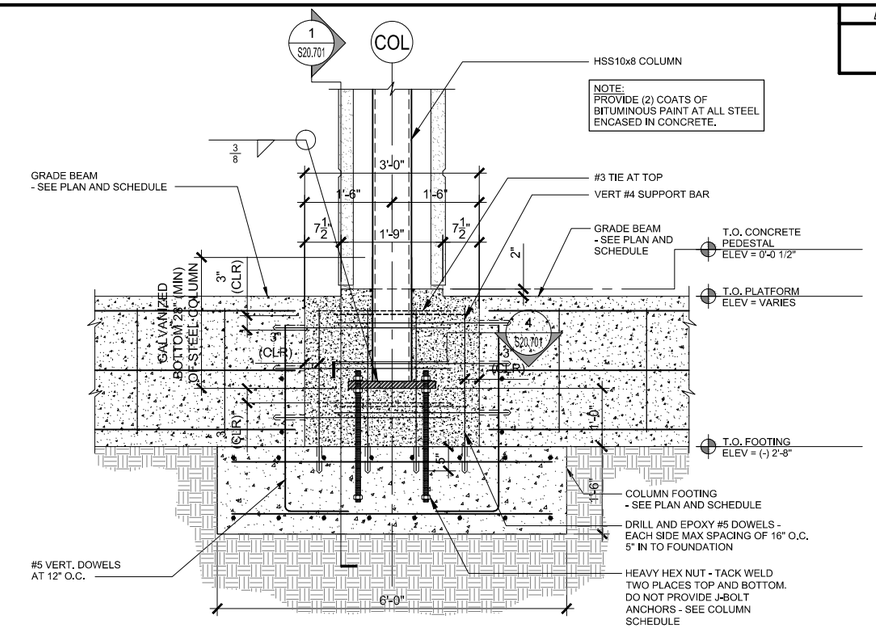

TYPICAL PLATFORM SECTION AT COLUMN

SCALE: 3/8"=1'-0" CANOPY A — 2 S20.701

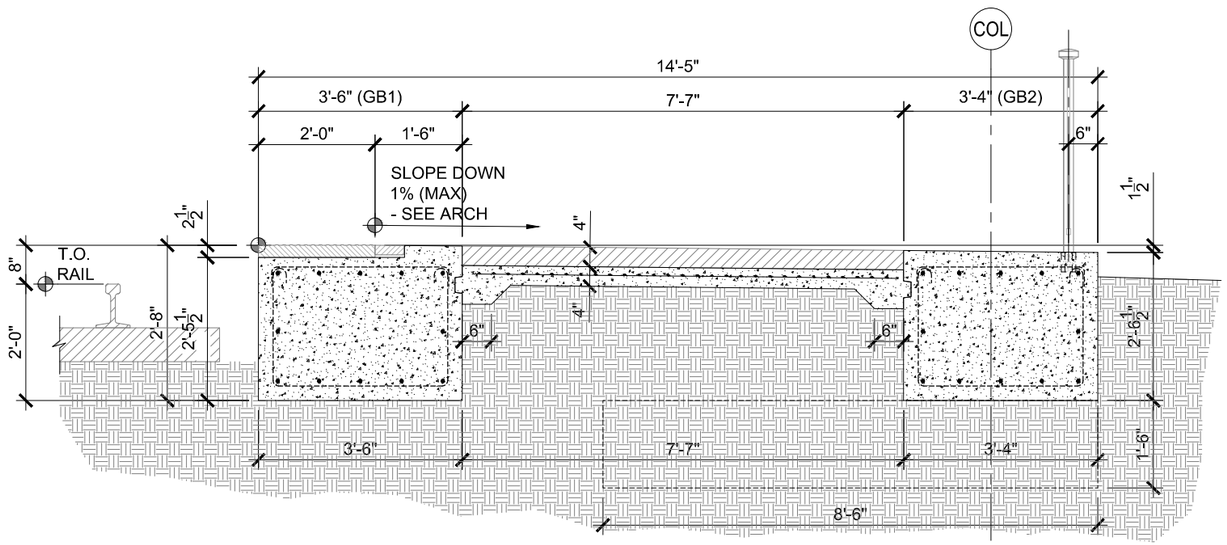

TYPICAL PLATFORM SECTION BETWEEN COLUMNS

SCALE: 3/8"=1'-0" CANOPY A — 3 S20.701

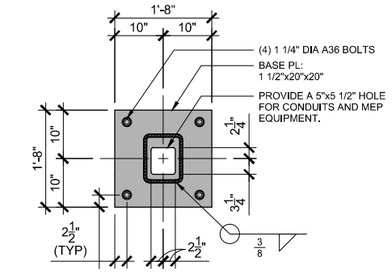

TYPICAL BASE PLATE DETAIL

SCALE: 3/8"=1'-0" CANOPY A — 4 S20.701

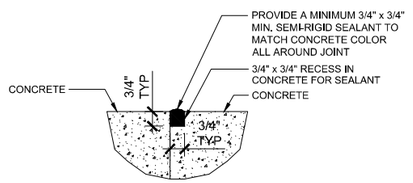

TYPICAL SEALANT DETAIL AT CONCRETE RECESS

SCALE: 1 1/2"=1'-0" — 5 S20.701

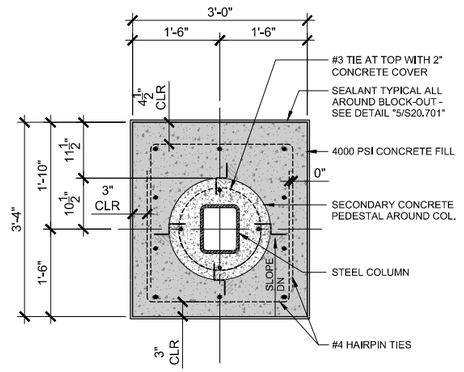

CONCRETE REINF. DETAIL AROUND STL COL BASE PL

SCALE: 3/8"=1'-0" CANOPY A — 6 S20.701

NOTICE: THE OFFICIAL RECORD OF THIS SHEET IS THE ELECTRONIC FILE SIGNED AND SEALED UNDER RULE 61G15-23.003, F.A.C.

REVISIONS					
DATE	BY	DESCRIPTION	DATE	BY	DESCRIPTION

McElroyEngineering
STRUCTURAL DESIGN GROUP
1835 EDGEWATER DR. ORLANDO, FL. 32804
P: 407.245.8775 | F: 407.245.8744
www.mcelroyeng.com
CERTIFICATE OF AUTHORIZATION - 8822
CRAIG E. McELROY, P.E. NO. 44741

STATE OF FLORIDA
DEPARTMENT OF TRANSPORTATION

ROAD NO.	COUNTY	FINANCIAL PROJECT ID
CFRC P2S	VARIOUS	423446-9-52-01

CENTRAL FLORIDA COMMUTER RAIL TRANSIT (CFCRT) PHASE 2 SOUTH

SECTIONS AND DETAILS

SHEET NO. 183

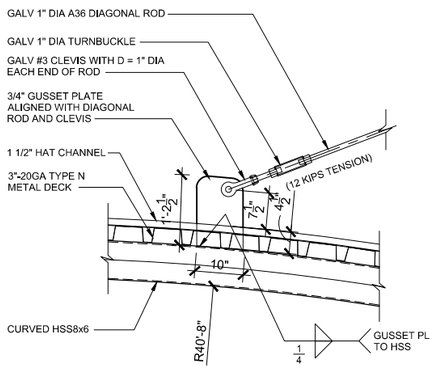

TYPICAL DIAGONAL BRACE CONNECTION SECTION

SCALE: 3/8"=1'-0" CANOPY A 1 S20.702

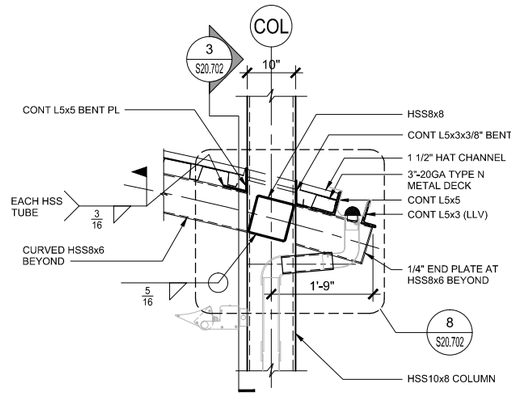

HSS8x8 CONNECTION TO HSS10x8 COLUMN

SCALE: 3/8"=1'-0" CANOPY A 2 S20.702

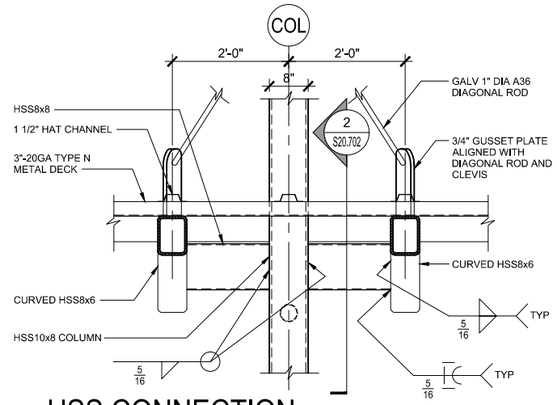

HSS CONNECTION TO COLUMN

SCALE: 3/8"=1'-0" CANOPY A 3 S20.702

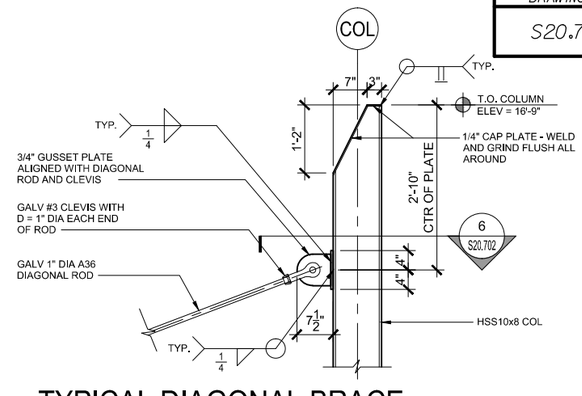

TYPICAL DIAGONAL BRACE CONNECTION SECTION

SCALE: 3/8"=1'-0" CANOPY A 4 S20.702

TYPICAL EDGE CONDITION AT CURVED BEAM

SCALE: 3/4"=1'-0" CANOPY A 5 S20.702

TENSION ROD CONNECTION TO HSS COLUMN DETAIL

SCALE: 3/4"=1'-0" CANOPY A 6 S20.702

COLUMN PENETRATION AT DOWNSPOUT DETAIL

SCALE: 1 1/2"=1'-0" CANOPY A 7 S20.702

COLUMN PENETRATION AT DOWNSPOUT SECTION

SCALE: 3/4"=1'-0" CANOPY A 8 S20.702

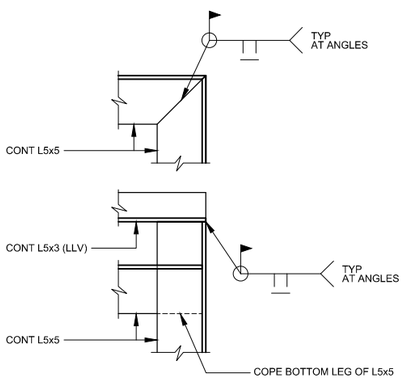

TYPICAL WELD CONNECTIONS AT EDGE OF CANOPY

SCALE: 3/4"=1'-0" CANOPY A 9 S20.702

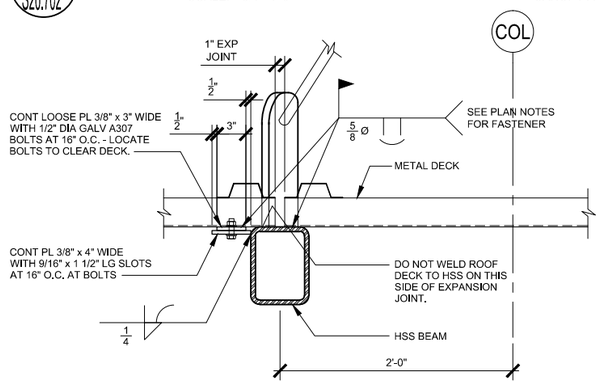

EXPANSION JOINT DETAIL FOR CANOPY TYPE A

SCALE: 3/4"=1'-0" CANOPY A 10 S20.702

REVISIONS					
DATE	BY	DESCRIPTION	DATE	BY	DESCRIPTION

McElroyEngineering
STRUCTURAL DESIGN GROUP
1835 EDGEWATER DR. ORLANDO, FL. 32804
P: 407.245.8775 | F: 407.245.8744
www.mcelroyeng.com
CERTIFICATE OF AUTHORIZATION - 8822
CRAIG E. McELROY, P.E. NO. 44741

STATE OF FLORIDA
DEPARTMENT OF TRANSPORTATION

ROAD NO.	COUNTY	FINANCIAL PROJECT ID
CFRC P2S	VARIOUS	423446-9-52-01

CENTRAL FLORIDA COMMUTER RAIL TRANSIT (CFCRT) PHASE 2 SOUTH

SECTIONS AND DETAILS

SHEET NO. 184

NOTICE: THE OFFICIAL RECORD OF THIS SHEET IS THE ELECTRONIC FILE SIGNED AND SEALED UNDER RULE 61G15-23.003, F.A.C.

DRAWING NO.
S20.703

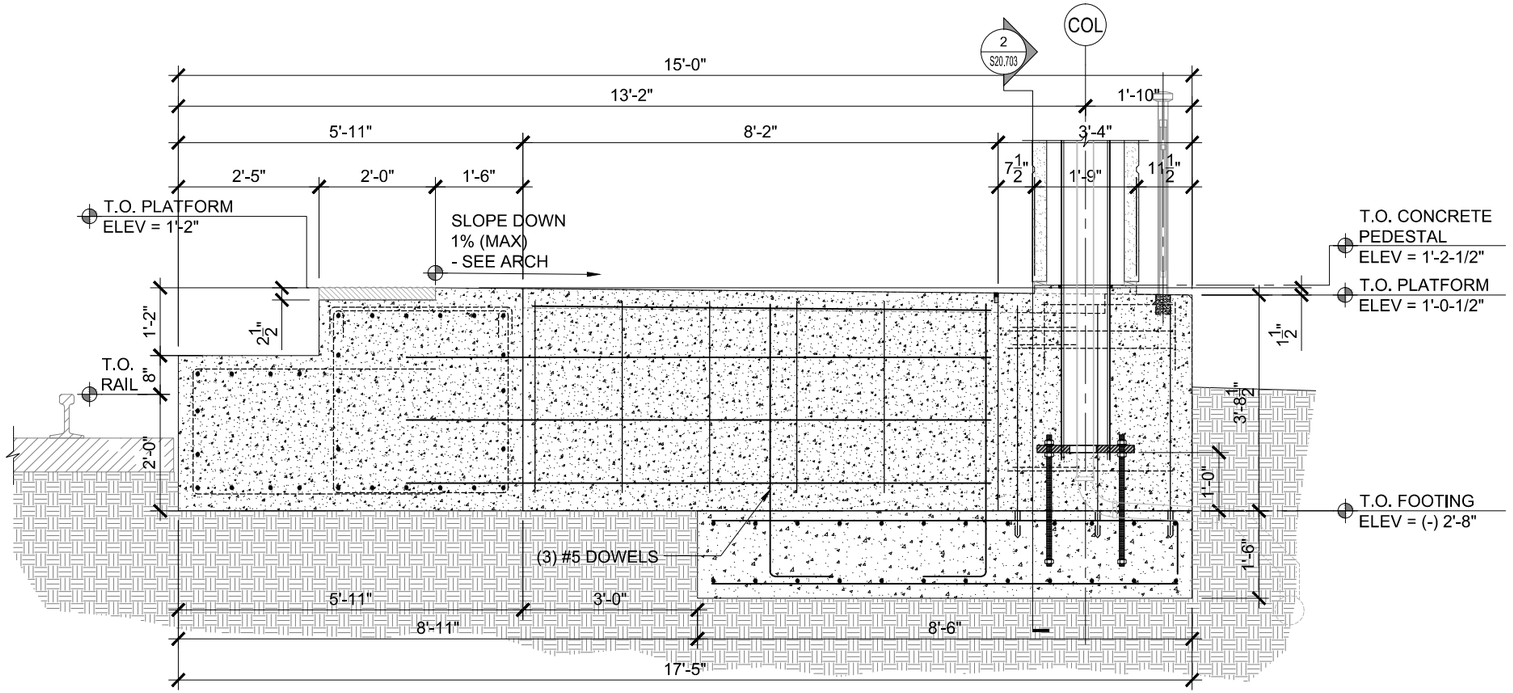

TYPICAL PLATFORM SECTION AT COLUMN

SCALE: 3/8"=1'-0" MINI-HIGH CANOPY A 1 S20.703

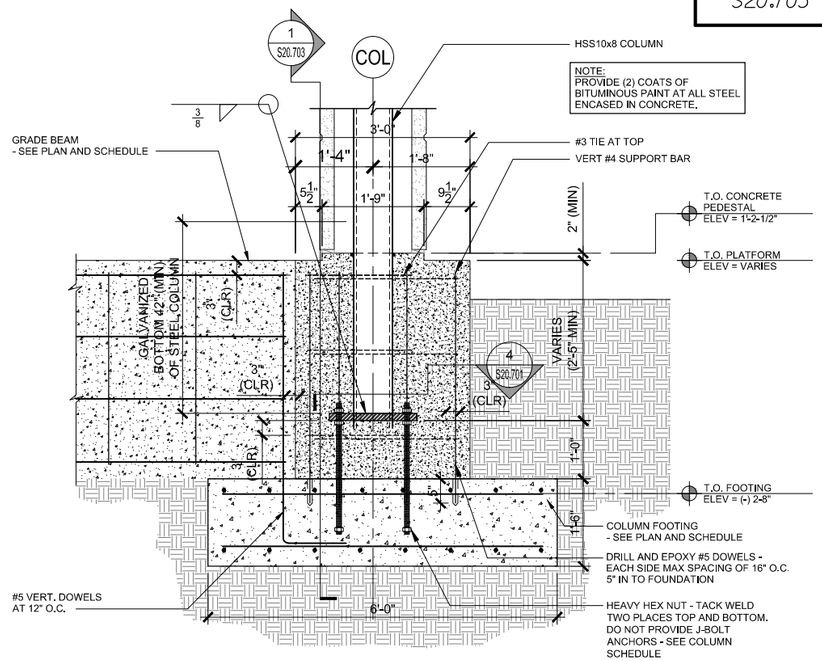

TYPICAL PLATFORM SECTION AT COLUMN

SCALE: 3/8"=1'-0" MINI-HIGH CANOPY A 2 S20.703

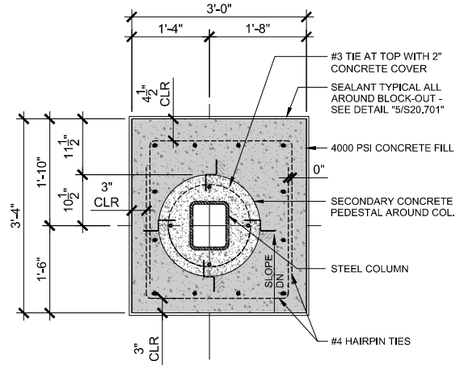

CONCRETE REINF. DETAIL AROUND STL COL BASE PL

SCALE: 3/8"=1'-0" MINI-HIGH CANOPY A 3 S20.703

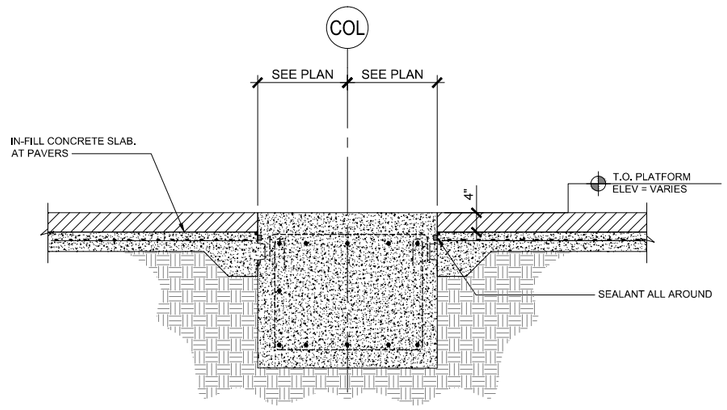

TYPICAL SECTION AT INTERIOR GRADE BEAM

SCALE: 3/8"=1'-0" CANOPY A 4 S20.703

NOTICE: THE OFFICIAL RECORD OF THIS SHEET IS THE ELECTRONIC FILE SIGNED AND SEALED UNDER RULE 61G15-23.003, F.A.C.

REVISIONS					
DATE	BY	DESCRIPTION	DATE	BY	DESCRIPTION

McElroyEngineering
STRUCTURAL DESIGN GROUP
1835 EDGEWATER DR. ORLANDO, FL. 32804
P: 407.245.8775 | F: 407.245.8744
www.mcelroyeng.com
CERTIFICATE OF AUTHORIZATION - 8822
CRAIG E. McELROY, P.E. NO. 44741

STATE OF FLORIDA
DEPARTMENT OF TRANSPORTATION

ROAD NO.	COUNTY	FINANCIAL PROJECT ID
CFRC P2S	VARIOUS	423446-9-52-01

CENTRAL FLORIDA COMMUTER RAIL TRANSIT (CFCRT) PHASE 2 SOUTH

SECTIONS AND DETAILS

SHEET NO. 185

Wed, 13 May 2015 11:46 am N:\AECOM\39111_01 CFCRT Phase 2 Amendment #5\DWGS\20_Details\39111_S20.703.dwg

DRAWING NO.
S20.704

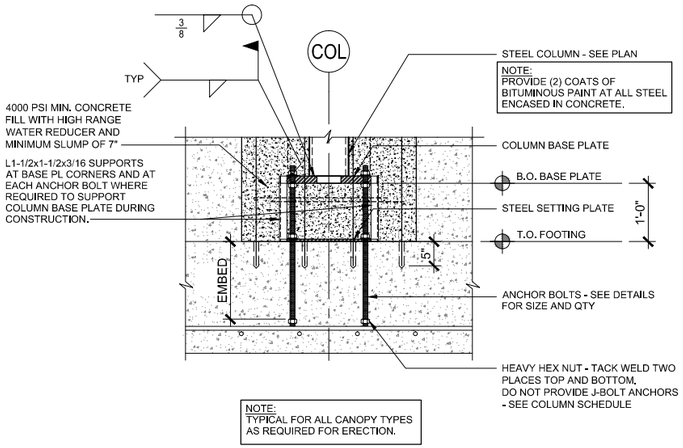

TEMPORARY SUPPORT ANGLES AT COLUMN BASE PLATE

SCALE: 3/8"=1'-0" TYP ALL CANOPIES AS REQUIRED — 1 / S20.704

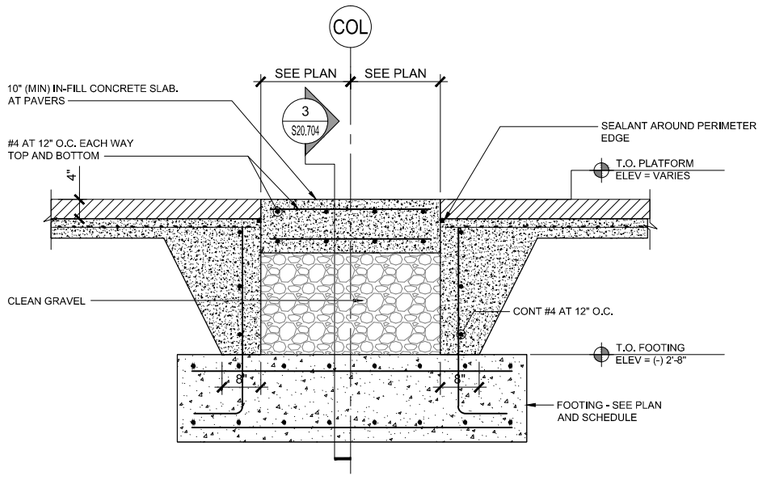

SLAB IN-FILL SECTION AT FUTURE COLUMN

SCALE: 3/8"=1'-0" CANOPY A — 2 / S20.704

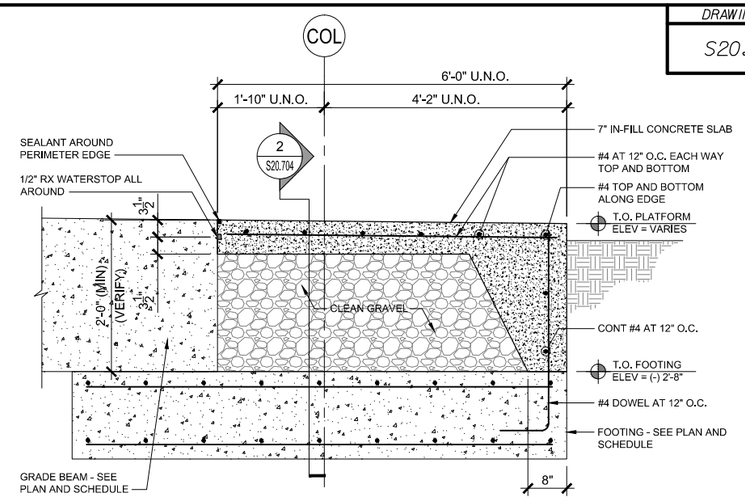

SLAB IN-FILL SECTION AT FUTURE COLUMN

SCALE: 3/8"=1'-0" CANOPY A — 3 / S20.704

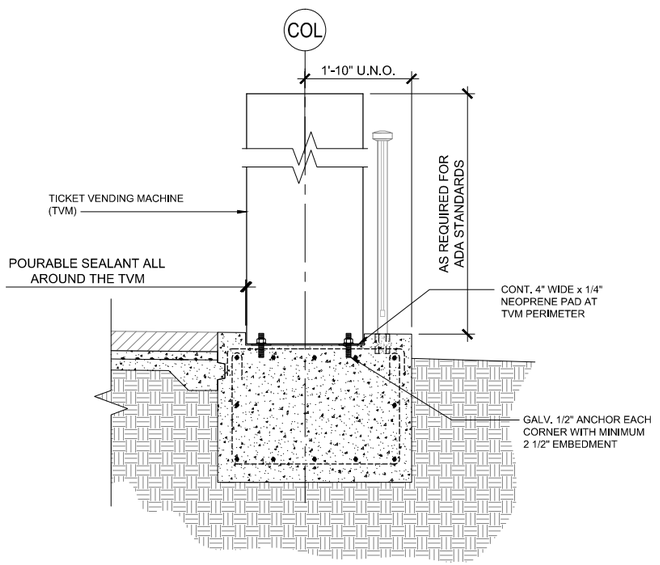

RECESS AT TVM FOR ADA STANDARDS

SCALE: 3/8"=1'-0" — 4 / S20.704

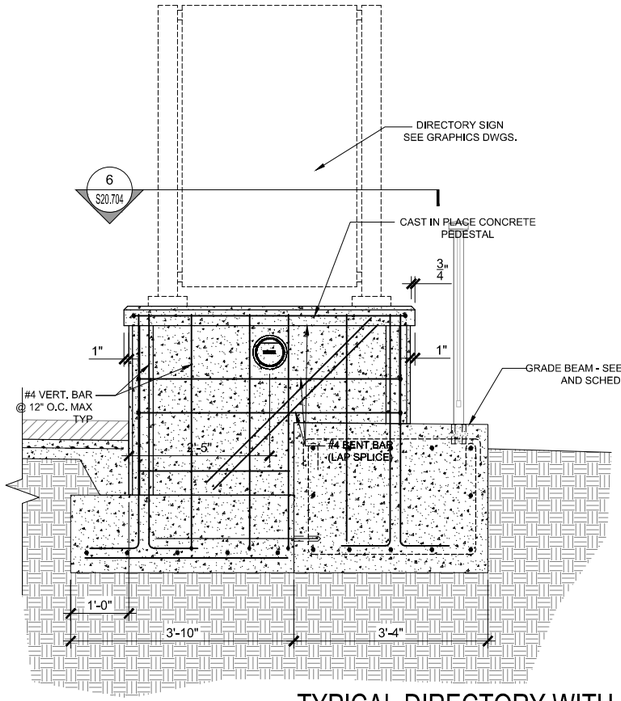

TYPICAL DIRECTORY WITH C.I.P. PEDESTAL

SCALE: 3/8"=1'-0" — 5 / S20.704

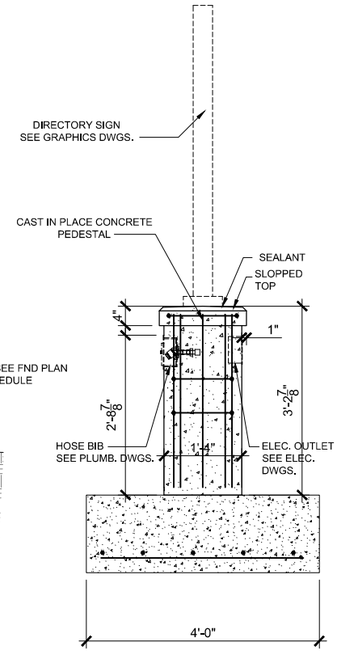

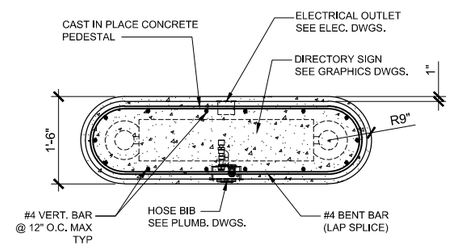

TYPICAL DIRECTORY WITH C.I.P. PEDESTAL

SCALE: 3/8"=1'-0" — 6 / S20.704

NOTICE: THE OFFICIAL RECORD OF THIS SHEET IS THE ELECTRONIC FILE SIGNED AND SEALED UNDER RULE 61G15-23.003, F.A.C.

REVISIONS					
DATE	BY	DESCRIPTION	DATE	BY	DESCRIPTION

McElroyEngineering
STRUCTURAL DESIGN GROUP
1835 EDGEWATER DR. ORLANDO, FL. 32804
P: 407.245.8775 | F: 407.245.8744
www.mcelroyeng.com
CERTIFICATE OF AUTHORIZATION - 8822
CRAIG E. McELROY, P.E. NO. 44741

STATE OF FLORIDA
DEPARTMENT OF TRANSPORTATION

ROAD NO.	COUNTY	FINANCIAL PROJECT ID
CFRC P2S	VARIOUS	423446-9-52-01

CENTRAL FLORIDA COMMUTER RAIL TRANSIT (CFCRT) PHASE 2 SOUTH

SECTIONS AND DETAILS

SHEET NO. 186

DRAWING NO.
S20.705

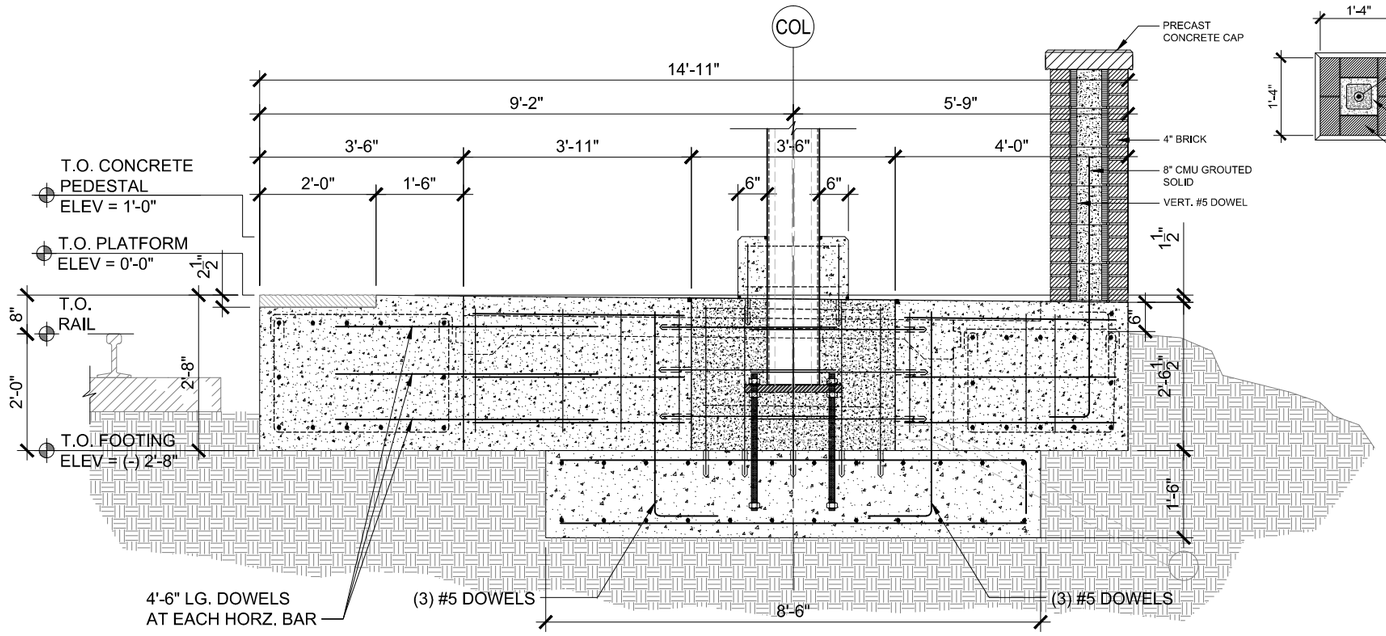

TYPICAL PLATFORM SECTION AT COLUMN

SCALE: 3/8"=1'-0" CANOPY F — 1 / S20.705

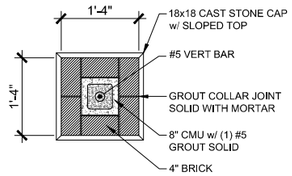

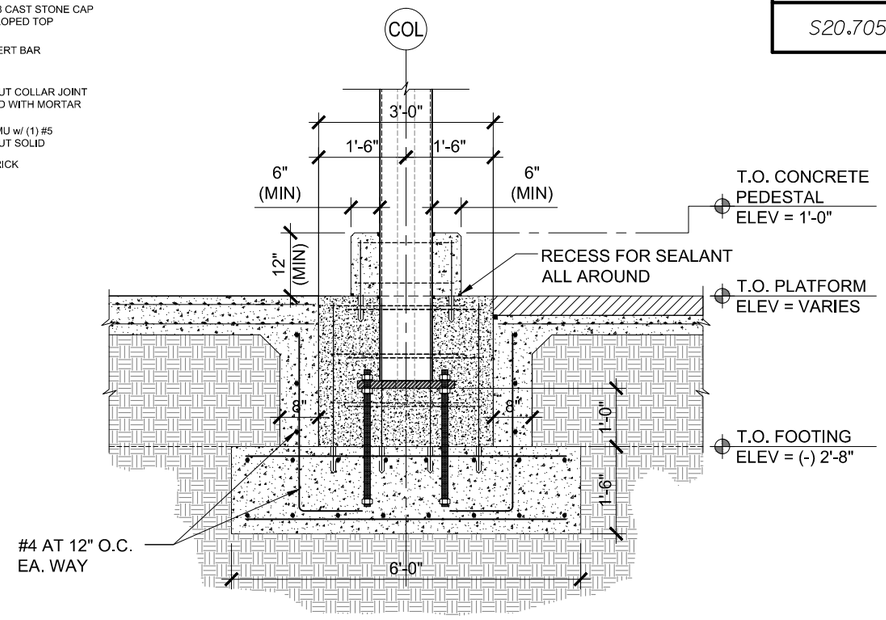

TYPICAL PLATFORM SECTION AT COLUMN

SCALE: 3/8"=1'-0" CANOPY F — 2 / S20.705

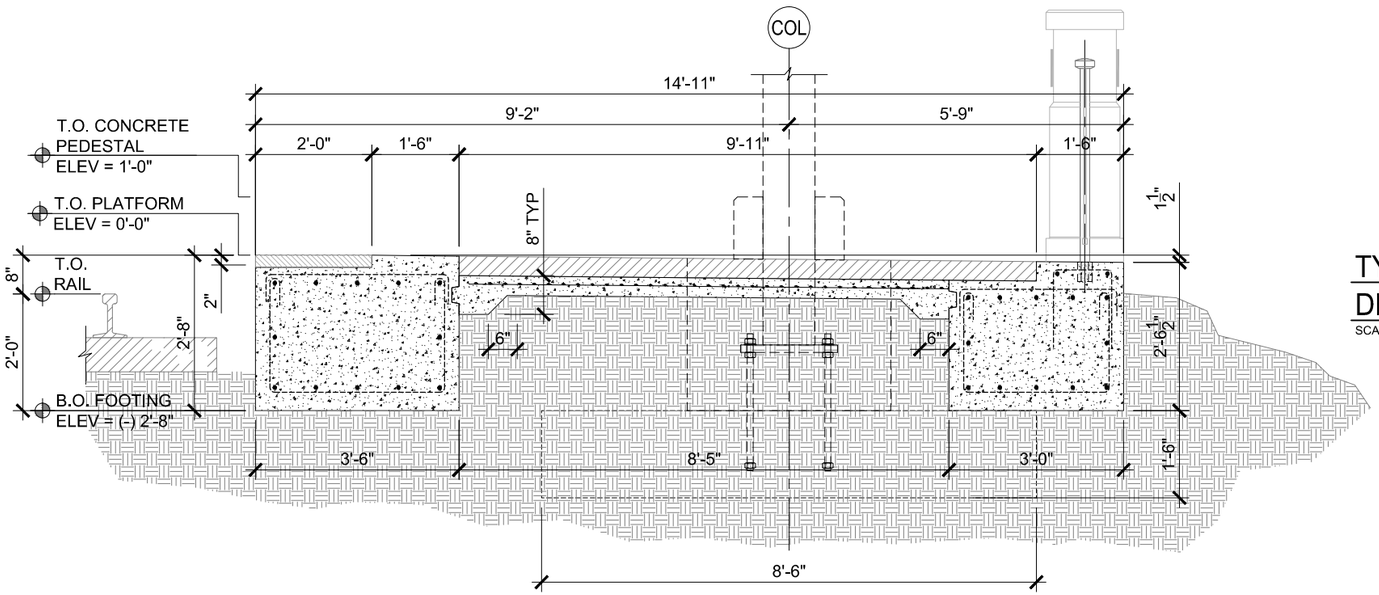

TYPICAL PLATFORM SECTION BETWEEN COLUMNS

SCALE: 3/8"=1'-0" CANOPY F — 3 / S20.705

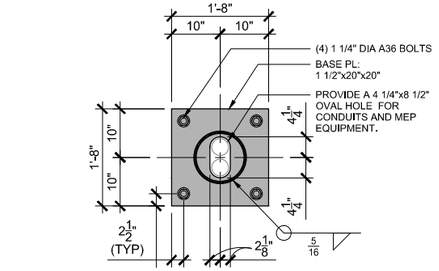

TYPICAL BASE PLATE DETAIL

SCALE: 3/8"=1'-0" CANOPY F — 4 / S20.705

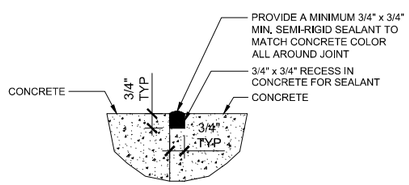

TYPICAL ISOLATION JOINT DETAIL

SCALE: 1 1/2"=1'-0" — 5 / S20.705

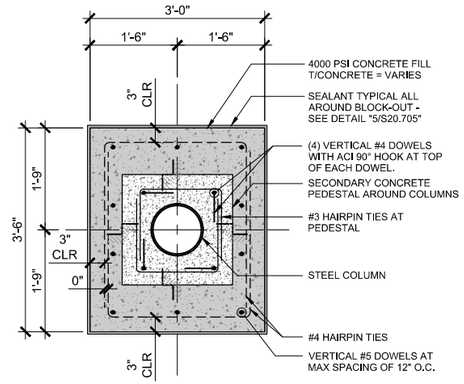

CONCRETE REINF. DETAIL AROUND STL COL BASE PL

SCALE: 3/8"=1'-0" CANOPY F — 6 / S20.705

NOTICE: THE OFFICIAL RECORD OF THIS SHEET IS THE ELECTRONIC FILE SIGNED AND SEALED UNDER RULE 61G15-23.003, F.A.C.

REVISIONS					
DATE	BY	DESCRIPTION	DATE	BY	DESCRIPTION

McElroyEngineering
STRUCTURAL DESIGN GROUP
1835 EDGEWATER DR. ORLANDO, FL. 32804
P: 407.245.8775 | F: 407.245.8744
www.mcelroyeng.com
CERTIFICATE OF AUTHORIZATION - 8822
CRAIG E. McELROY, P.E. NO. 44741

STATE OF FLORIDA
DEPARTMENT OF TRANSPORTATION

ROAD NO.	COUNTY	FINANCIAL PROJECT ID
CFRC P2S	OSCEOLA	423446-9-52-01

CENTRAL FLORIDA COMMUTER RAIL TRANSIT (CFCRT) PHASE 2 SOUTH

SECTIONS AND DETAILS

SHEET NO. 187

Wed, 13 May 2015 11:47 am N:\AECOM\39110_01 CFCRT Phase 2 Amendment #5\DWGS\20_Details\39110_S20.705.dwg

DRAWING NO.
S20.706

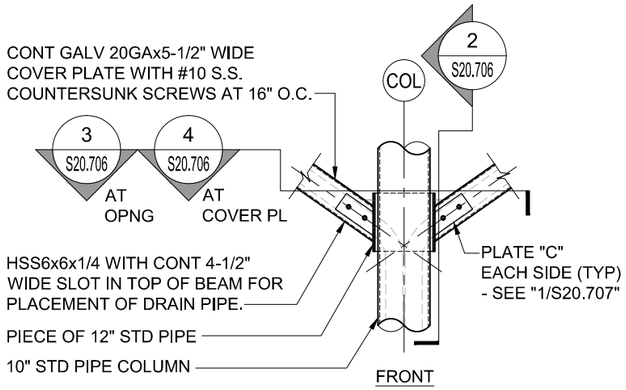

TYPICAL DETAIL 1
SCALE: 3/8"=1'-0" CANOPY F S20.706

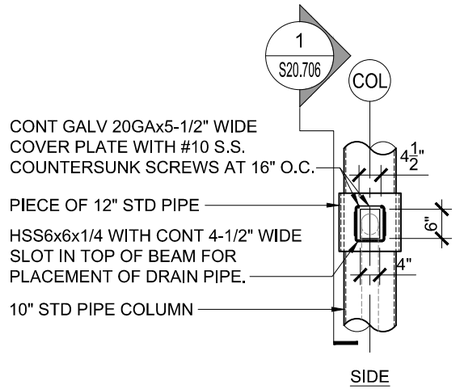

TYPICAL DETAIL 2
SCALE: 3/8"=1'-0" CANOPY F S20.706

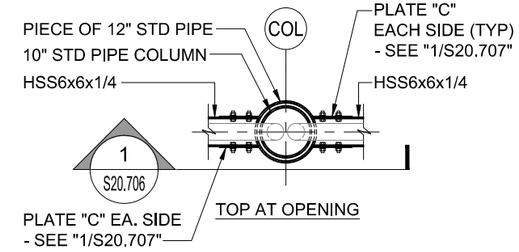

TYPICAL DETAIL 3
SCALE: 3/8"=1'-0" CANOPY F S20.706

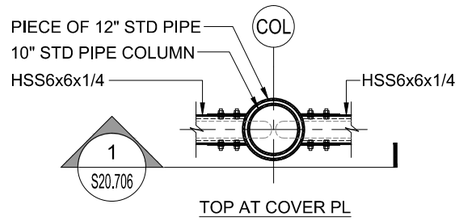

TYPICAL DETAIL 4
SCALE: 3/8"=1'-0" CANOPY F S20.706

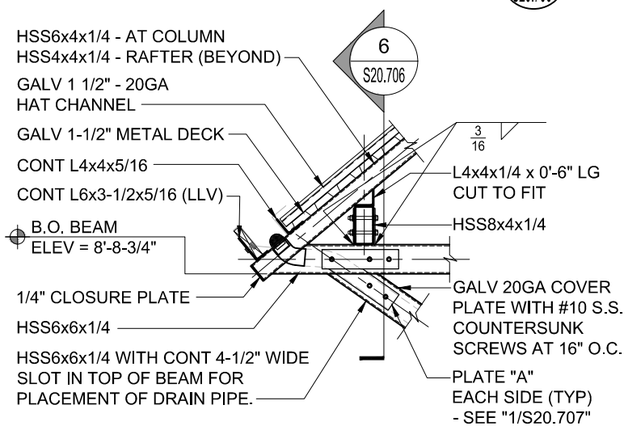

TYPICAL DETAIL 5
SCALE: 3/8"=1'-0" CANOPY F S20.706

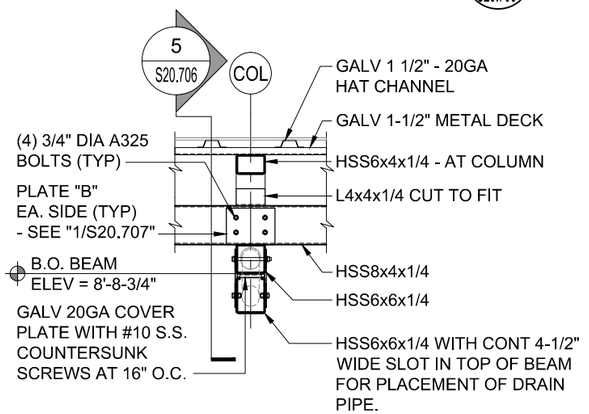

TYPICAL DETAIL 6
SCALE: 3/8"=1'-0" CANOPY F S20.706

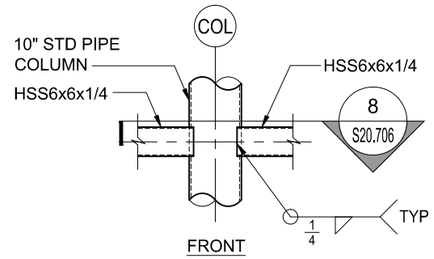

TYPICAL DETAIL 7
SCALE: 3/8"=1'-0" CANOPY F S20.706

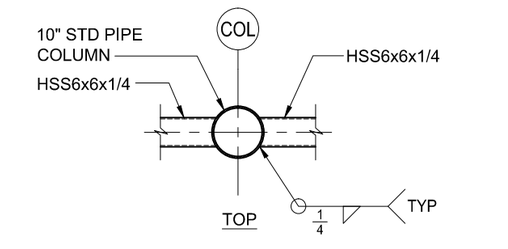

TYPICAL DETAIL 8
SCALE: 3/8"=1'-0" CANOPY F S20.706

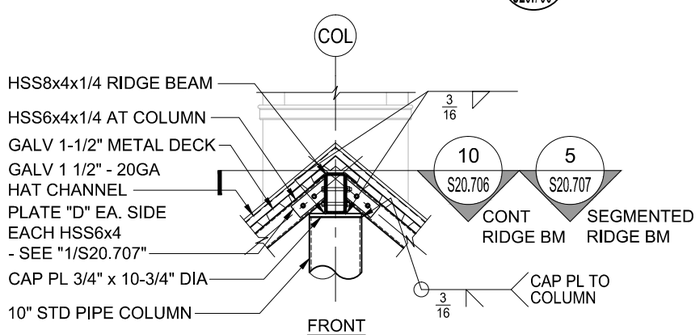

TYPICAL DETAIL 9
SCALE: 3/8"=1'-0" CANOPY F S20.706

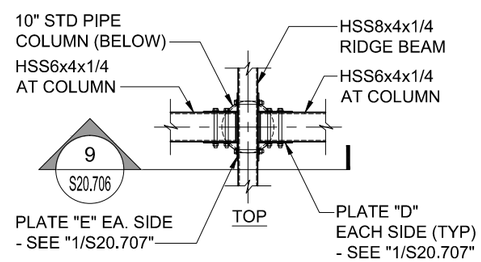

TYPICAL DETAIL 10
SCALE: 3/8"=1'-0" CANOPY F S20.706

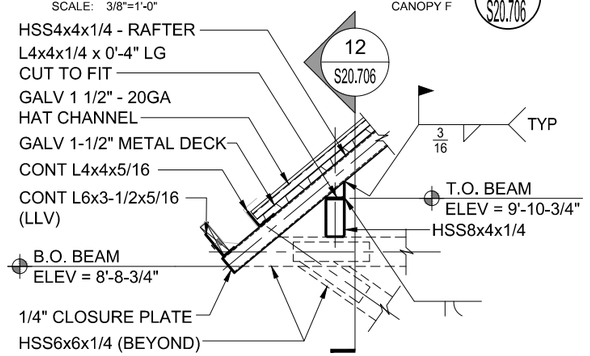

TYPICAL DETAIL 11
SCALE: 3/8"=1'-0" CANOPY F S20.706

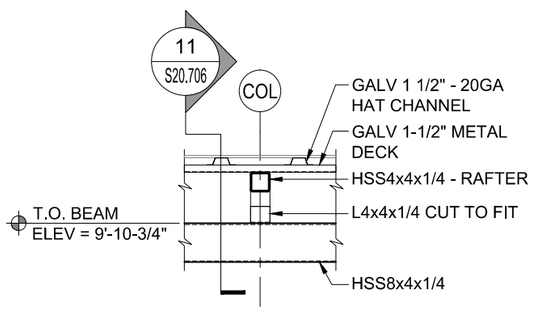

TYPICAL DETAIL 12
SCALE: 3/8"=1'-0" CANOPY F S20.706

NOTICE: THE OFFICIAL RECORD OF THIS SHEET IS THE ELECTRONIC FILE SIGNED AND SEALED UNDER RULE 61G15-23.003, F.A.C.

REVISIONS					
DATE	BY	DESCRIPTION	DATE	BY	DESCRIPTION

McElroyEngineering
STRUCTURAL DESIGN GROUP
1835 EDGEWATER DR. ORLANDO, FL. 32804
P: 407.245.8775 | F: 407.245.8744
www.mcelroyeng.com
CERTIFICATE OF AUTHORIZATION - 8822
CRAIG E. McELROY, P.E. NO. 44741

STATE OF FLORIDA
DEPARTMENT OF TRANSPORTATION

ROAD NO.	COUNTY	FINANCIAL PROJECT ID
CFRC P2S	OSCEOLA	423446-9-52-01

CENTRAL FLORIDA COMMUTER RAIL TRANSIT (CFCRT) PHASE 2 SOUTH

SECTIONS AND DETAILS

SHEET NO. 188

Wed, 13 May 2015 11:47 am N:\AECOM\3911_01 CFCRT Phase 2 Amendment #5\DWGS\20_Details\391101_S20.706.dwg

DRAWING NO.
S20.707

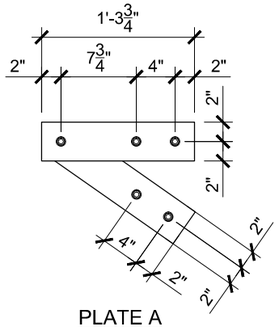

PLATE A

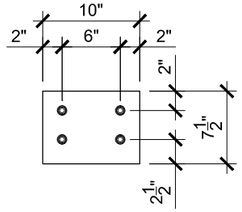

PLATE B

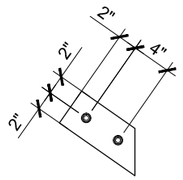

PLATE C

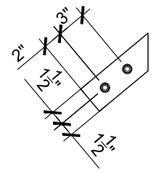

PLATE D

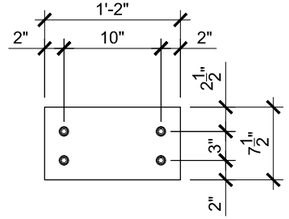

PLATE E

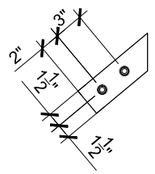

PLATE F

NOTE:

1. ALL PLATES TO BE 3/8" THICKNESS (U.N.O.)
2. ALL BOLTED CONNECTIONS TO BE 3/4" DIA A325 BOLTS (U.N.O.)

TYPICAL PLATE DETAILS

SCALE: 3/4"=1'-0"

CANOPY F 1 S20.707

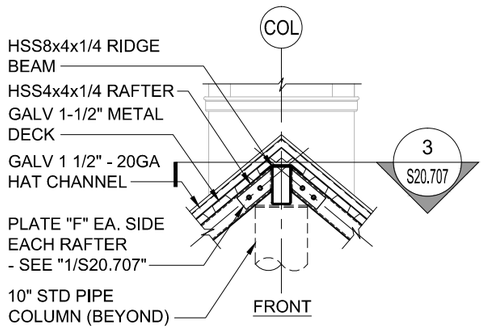

TYPICAL DETAIL 2

SCALE: 3/8"=1'-0" CANOPY F 2 S20.707

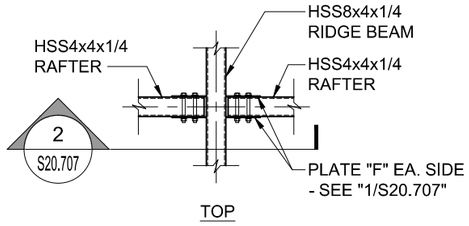

TYPICAL DETAIL 3

SCALE: 3/8"=1'-0" CANOPY F 3 S20.707

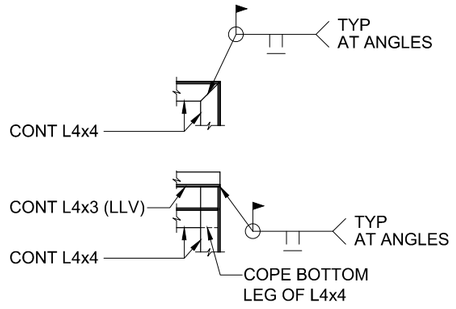

TYPICAL WELD CONNECTIONS AT EDGE OF CANOPY

SCALE: 3/8"=1'-0" CANOPY F 4 S20.707

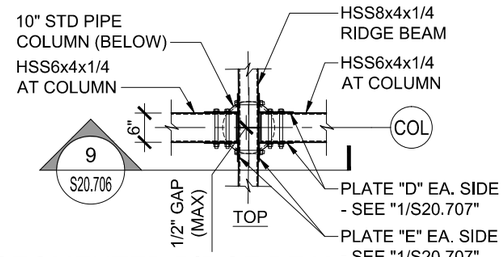

SEGMENTED RIDGE BEAM CONNECTION DETAIL

SCALE: 3/8"=1'-0" CANOPY F 5 S20.707

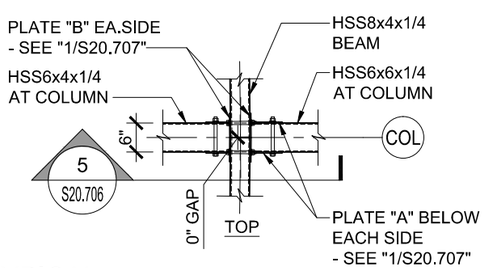

TYPICAL DETAIL 6

SCALE: 3/8"=1'-0" CANOPY F 6 S20.707

REVISIONS					
DATE	BY	DESCRIPTION	DATE	BY	DESCRIPTION

McElroyEngineering
STRUCTURAL DESIGN GROUP
1835 EDGEWATER DR. ORLANDO, FL. 32804
P: 407.245.8775 | F: 407.245.8744
www.mcelroyeng.com
CERTIFICATE OF AUTHORIZATION - 8822
CRAIG E. McELROY, P.E. NO. 44741

STATE OF FLORIDA
DEPARTMENT OF TRANSPORTATION

ROAD NO.	COUNTY	FINANCIAL PROJECT ID
CFRC P2S	OSCEOLA	423446-9-52-01

CENTRAL FLORIDA COMMUTER RAIL TRANSIT (CFCRT) PHASE 2 SOUTH

SECTIONS AND DETAILS

SHEET NO. 189

Wed, 13 May 2015 11:47 am N:\AECOM\39110_01 CFCRT Phase 2 Amendment #5\DWGS\20_Details\39110I_S20.707.dwg

NOTICE: THE OFFICIAL RECORD OF THIS SHEET IS THE ELECTRONIC FILE SIGNED AND SEALED UNDER RULE 61G15-23.003, F.A.C.

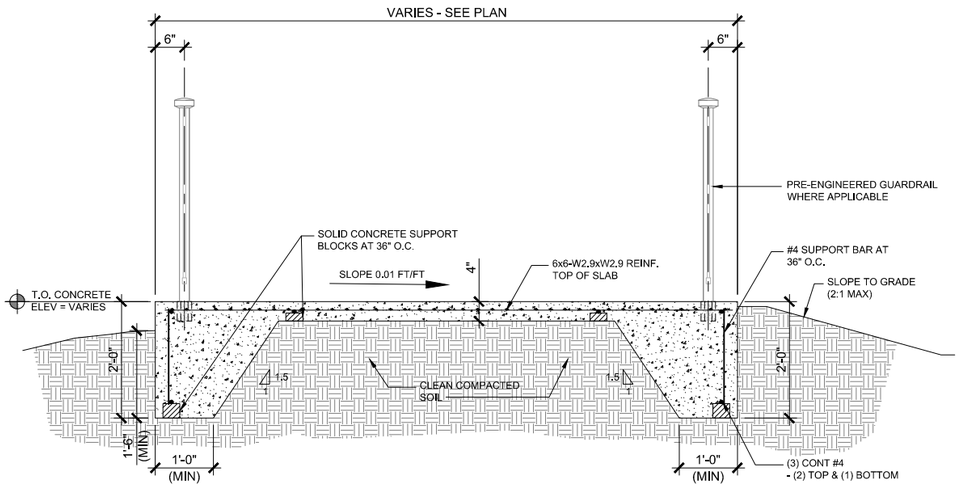

TYPICAL SECTION AT SIDEWALK / RAMP

1 S20.708

SCALE: 3/8"=1'-0"

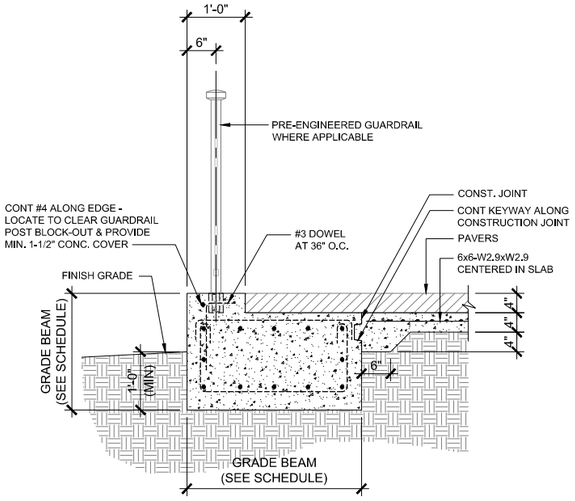

TYPICAL SECTION AT PLATFORM END

2 S20.708

SCALE: 3/8"=1'-0"

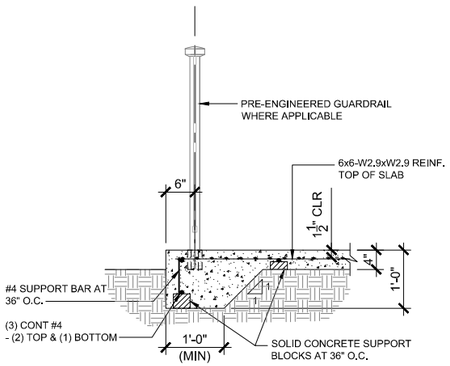

TYPICAL SECTION ALONG SLAB EDGE

3 S20.708

SCALE: 3/8"=1'-0"

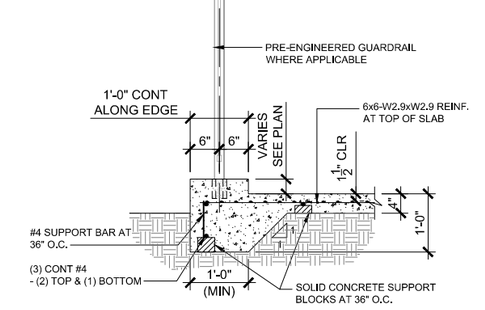

TYPICAL SECTION ALONG SLAB EDGE WITH CURB

4 S20.708

SCALE: 3/8"=1'-0"

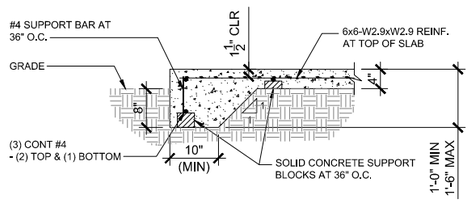

TYPICAL SLAB EDGE

5 S20.708

SCALE: 3/8"=1'-0"

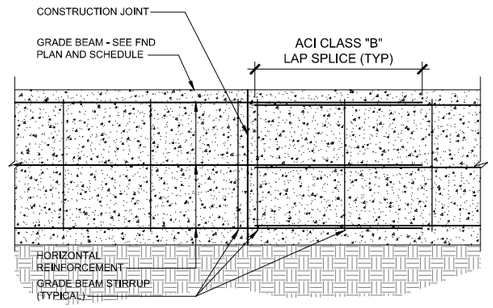

TYPICAL GRADE BEAM CONSTRUCTION JOINT DETAIL

6 S20.708

SCALE: N.T.S.

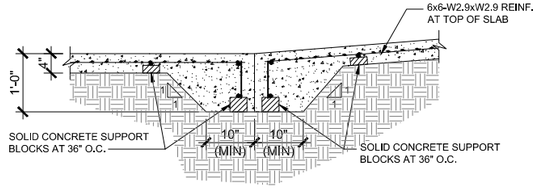

SECTION AT RAMP

7 S20.708

SCALE: 3/8"=1'-0"

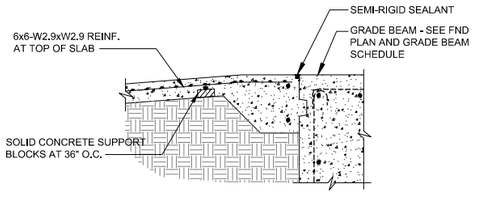

SECTION AT RAMP

8 S20.708

SCALE: 3/8"=1'-0"

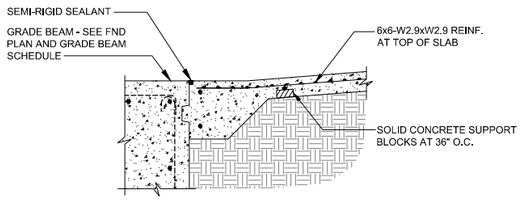

SECTION AT RAMP

9 S20.708

SCALE: 3/8"=1'-0"

NOTICE: THE OFFICIAL RECORD OF THIS SHEET IS THE ELECTRONIC FILE SIGNED AND SEALED UNDER RULE 61G15-23.003, F.A.C.

REVISIONS					
DATE	BY	DESCRIPTION	DATE	BY	DESCRIPTION

McElroyEngineering
STRUCTURAL DESIGN GROUP
1835 EDGEWATER DR. ORLANDO, FL. 32804
P: 407.245.8775 | F: 407.245.8744
www.mcelroyeng.com
CERTIFICATE OF AUTHORIZATION - 8822
CRAIG E. McELROY, P.E. NO. 44741

STATE OF FLORIDA
DEPARTMENT OF TRANSPORTATION

ROAD NO.	COUNTY	FINANCIAL PROJECT ID
CFRC P2S	VARIOUS	423446-9-52-01

CENTRAL FLORIDA COMMUTER RAIL TRANSIT (CFCRT) PHASE 2 SOUTH

SECTIONS AND DETAILS

SHEET NO. 190

DRAWING NO.
S20.709

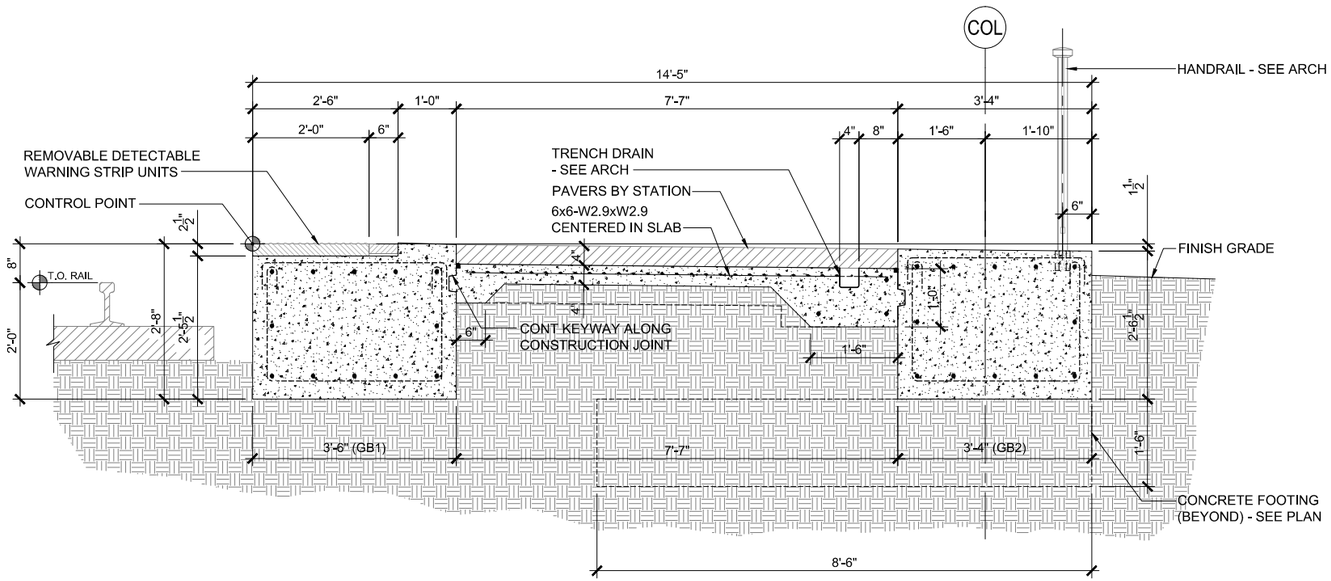

TYPICAL PLATFORM SECTION BETWEEN COLUMNS AT TRENCH DRAIN

SCALE: 3/8"=1'-0" CANOPY A

1 S20.709

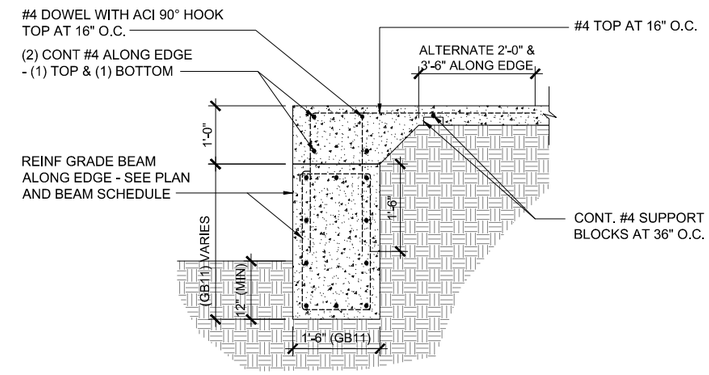

GRADE BEAM SECTION ALONG RAMP

SCALE: 3/8"=1'-0"

2 S20.709

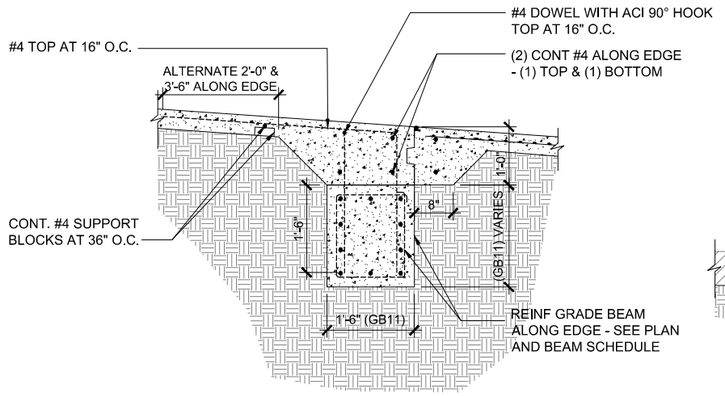

GRADE BEAM SECTION ALONG RAMP

SCALE: 3/8"=1'-0"

3 S20.709

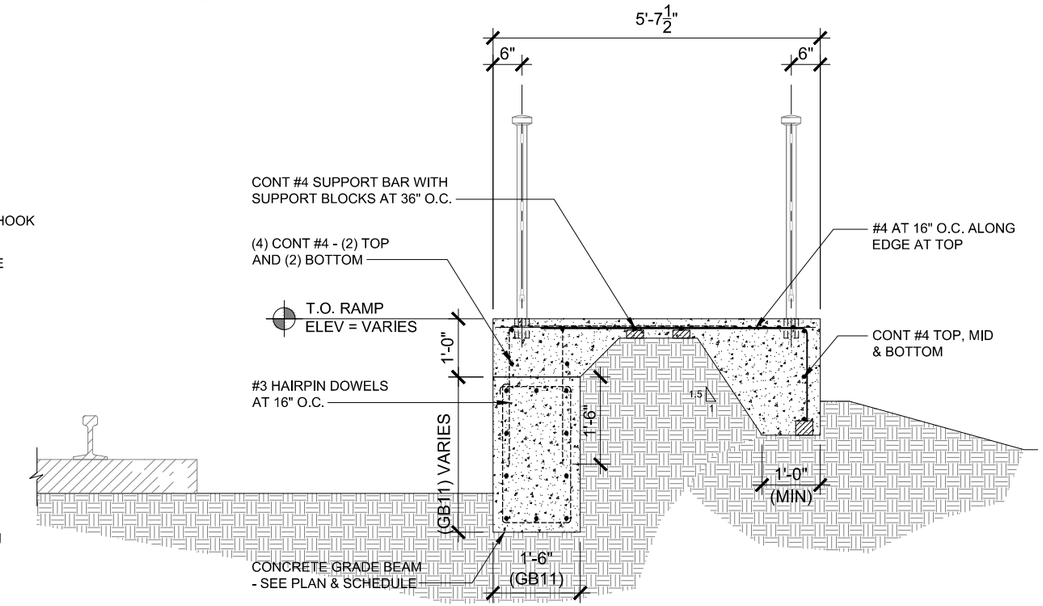

TYPICAL RAMP SECTION AT CANOPY "F" MINI-HIGH

SCALE: 3/8"=1'-0"

4 S20.709

NOTICE: THE OFFICIAL RECORD OF THIS SHEET IS THE ELECTRONIC FILE SIGNED AND SEALED UNDER RULE 61G15-23.003, F.A.C.

REVISIONS					
DATE	BY	DESCRIPTION	DATE	BY	DESCRIPTION

McElroyEngineering
STRUCTURAL DESIGN GROUP
1835 EDGEWATER DR. ORLANDO, FL. 32804
P: 407.245.8775 | F: 407.245.8744
www.mcelroyeng.com
CERTIFICATE OF AUTHORIZATION - 8822
CRAIG E. McELROY, P.E. NO. 44741

STATE OF FLORIDA
DEPARTMENT OF TRANSPORTATION

ROAD NO.	COUNTY	FINANCIAL PROJECT ID
CFRC P2S	VARIOUS	423446-9-52-01

CENTRAL FLORIDA COMMUTER RAIL TRANSIT (CFCRT) PHASE 2 SOUTH

SECTIONS AND DETAILS

SHEET NO. 191

DRAWING NO.
S20.710

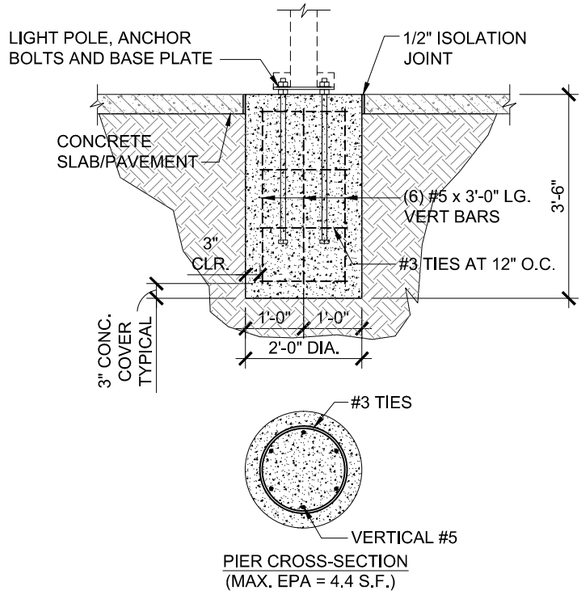

PIER CROSS-SECTION
(MAX. EPA = 4.4 S.F.)

LIGHT POLE FOUNDATION
HEIGHT < 12 FT

SCALE: 3/8"=1'-0" — 1 S20.710

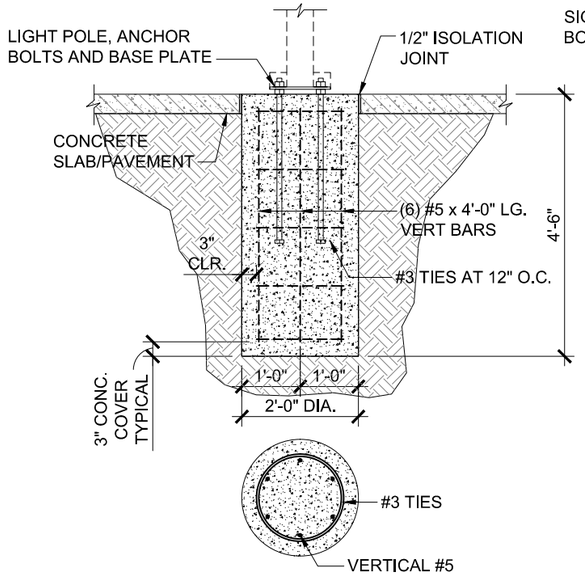

PIER CROSS-SECTION
(MAX. EPA = 3.0 S.F.)

LIGHT POLE FOUNDATION
HEIGHT < 24 FT

SCALE: 3/8"=1'-0" — 2 S20.710

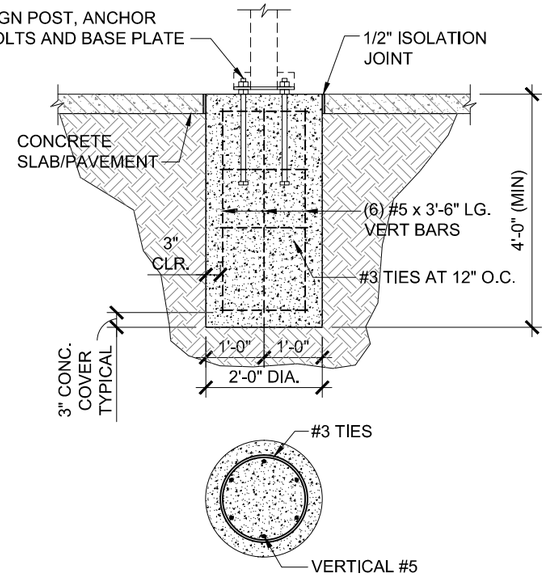

PIER CROSS-SECTION
(MAX. SIGN AREA = 24 S.F.)
(MAX. SIGN HEIGHT = 10'-0")

SIGN STRUCTURE FOUNDATION
TYPE A

SCALE: 3/8"=1'-0" — 3 S20.710

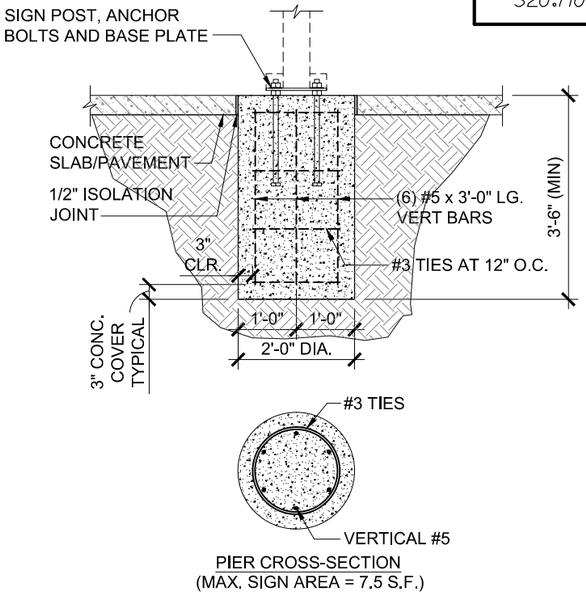

PIER CROSS-SECTION
(MAX. SIGN AREA = 7.5 S.F.)
(MAX. SIGN HEIGHT = 11'-6")

SIGN STRUCTURE FOUNDATION
TYPE A-2, E & F

SCALE: 3/8"=1'-0" — 4 S20.710

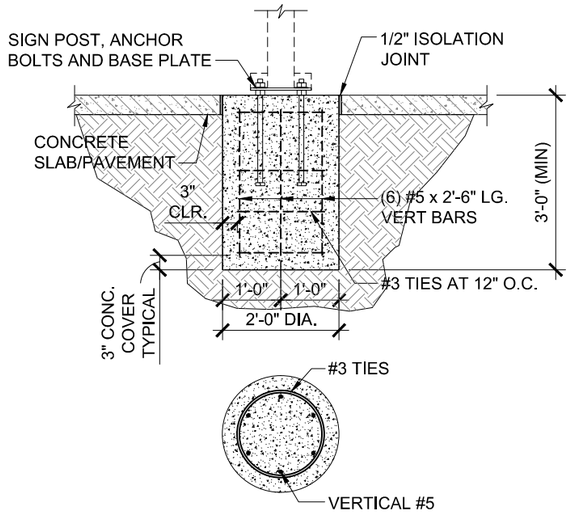

PIER CROSS-SECTION
(MAX. SIGN AREA = 21 S.F.)
(MAX. SIGN HEIGHT = 6'-10")

SIGN STRUCTURE FOUNDATION
TYPE B, C & K

SCALE: 3/8"=1'-0" — 5 S20.710

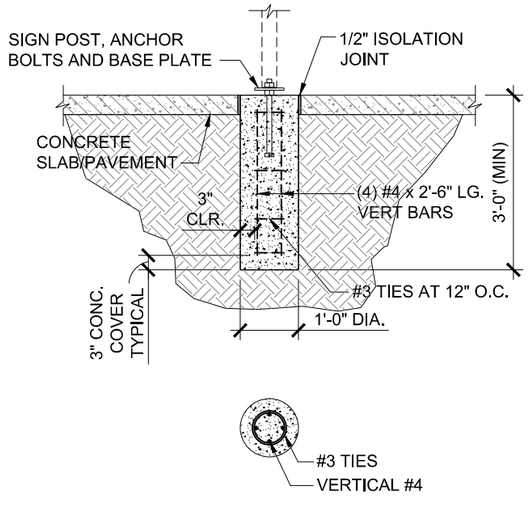

PIER CROSS-SECTION
(MAX. SIGN AREA = 2.5 S.F.)
(MAX. SIGN HEIGHT = 9'-6")

SIGN STRUCTURE FOUNDATION
TYPE G & H

SCALE: 3/8"=1'-0" — 6 S20.710

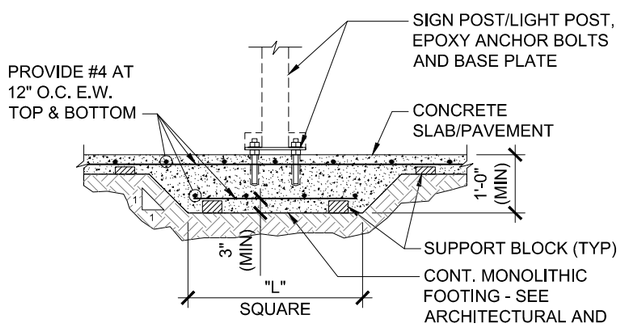

MIN FOOTING LENGTH "L":
- AT LIGHT POLE L = 3'-0" LG (MIN)
- AT SIGN "K" = 5'-0" LG (MIN)
- AT SIGN "K" AND LIGHT POLE L = 7'-0" LG (MIN)

ALTERNATE
SIGN STRUCTURE TYPE K AND 12 FT LIGHT POLE FOUNDATION

SCALE: 3/8"=1'-0" — 7 S20.710

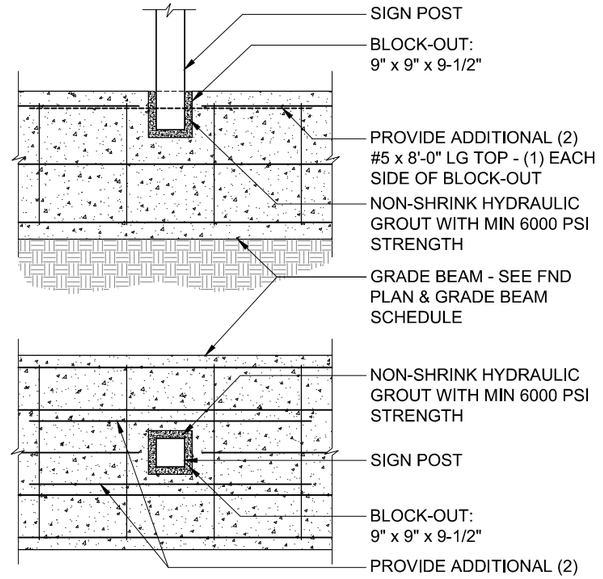

SIGN STRUCTURE TYPE P
SUPPORT AT GRADE BEAM

SCALE: 3/8"=1'-0" — 8 S20.710

NOTICE: THE OFFICIAL RECORD OF THIS SHEET IS THE ELECTRONIC FILE SIGNED AND SEALED UNDER RULE 61G15-23.003, F.A.C.

REVISIONS

DATE	BY	DESCRIPTION	DATE	BY	DESCRIPTION

McElroyEngineering
STRUCTURAL DESIGN GROUP
1835 EDGEWATER DR. ORLANDO, FL. 32804
P: 407.245.8775 | F: 407.245.8744
www.mcelroyeng.com
CERTIFICATE OF AUTHORIZATION - 8822
CRAIG E. McELROY, P.E. NO. 44741

STATE OF FLORIDA
DEPARTMENT OF TRANSPORTATION

ROAD NO.	COUNTY	FINANCIAL PROJECT ID
CFRC P2S	VARIOUS	423446-9-52-01

CENTRAL FLORIDA COMMUTER RAIL TRANSIT (CFCRT) PHASE 2 SOUTH

SECTIONS AND DETAILS

SHEET NO. 192

Wed, 13 May 2015 11:48 am N:\AECOM\3911_01 CFCRT Phase 2 Amendment #5\DWGS\20_Details\391101_S20.710.dwg

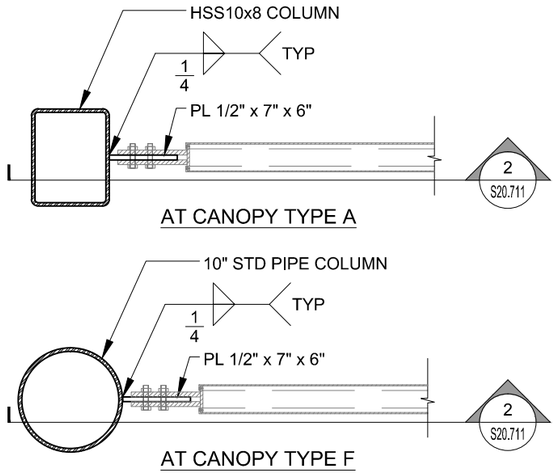

TYP. SIGN TYPE "I" ATTACHMENT DETAIL TO STEEL COLUMN — 1 S20.711

SCALE: 3/4"=1'-0"

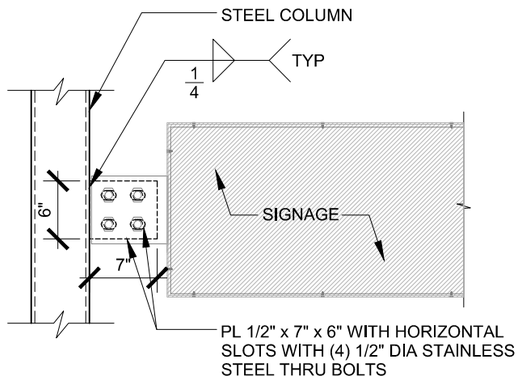

TYP. SIGN TYPE "I" ATTACHMENT TO STEEL COLUMN DETAIL (UNO) — 2 S20.711

SCALE: 3/4"=1'-0"

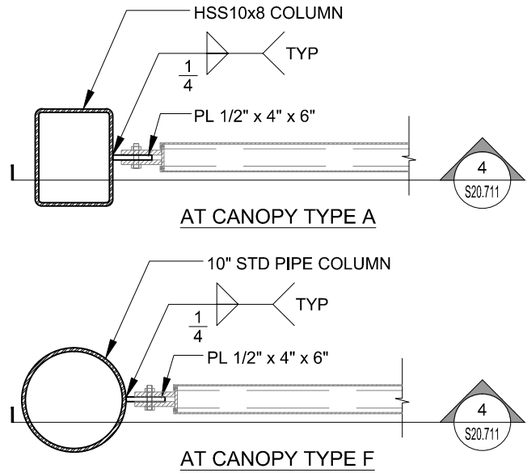

TYP. SIGN TYPE "L" ATTACHMENT DETAIL TO STEEL COLUMN — 3 S20.711

SCALE: 3/4"=1'-0"

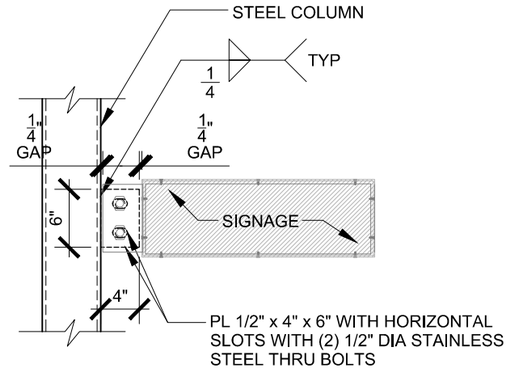

TYP. SIGN TYPE "L" ATTACHMENT TO STEEL COLUMN DETAIL (UNO) — 4 S20.711

SCALE: 3/4"=1'-0"

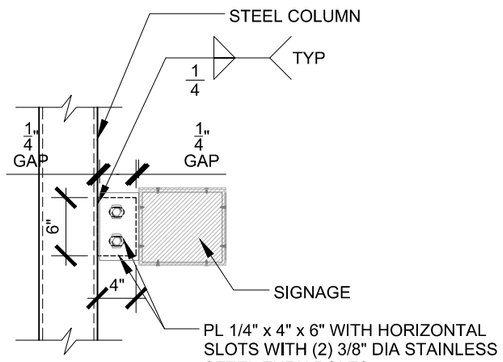

TYP. SIGN TYPE "N" ATTACHMENT TO STEEL COLUMN DETAIL (UNO) — 5 S20.711

SCALE: 3/4"=1'-0"

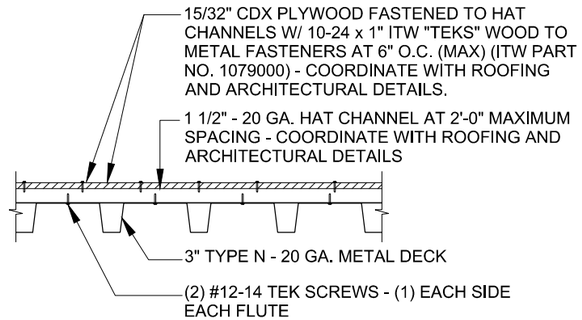

CONNECTION AT 3" METAL DECK

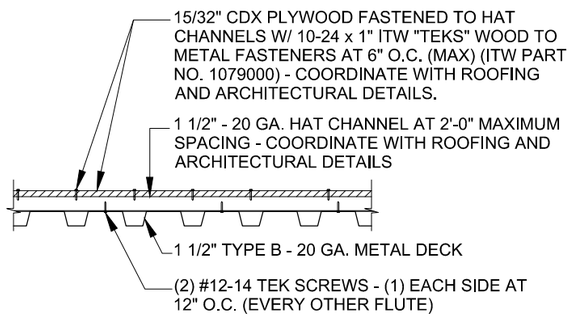

CONNECTION AT 1 1/2" METAL DECK

TYPICAL HAT CHANNEL DETAIL — 6 S20.711

SCALE: 3/4" = 1'-0"

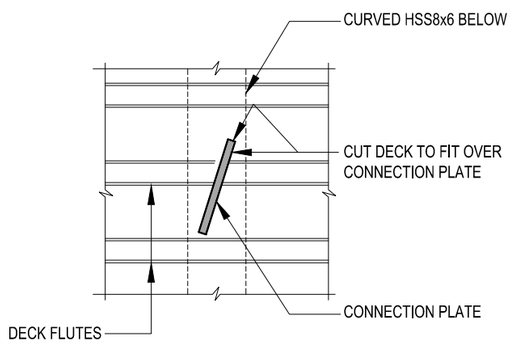

METAL DECK TYPICAL CONN. AT CANOPY A — 7 S20.711

SCALE: 3/4"=1'-0"

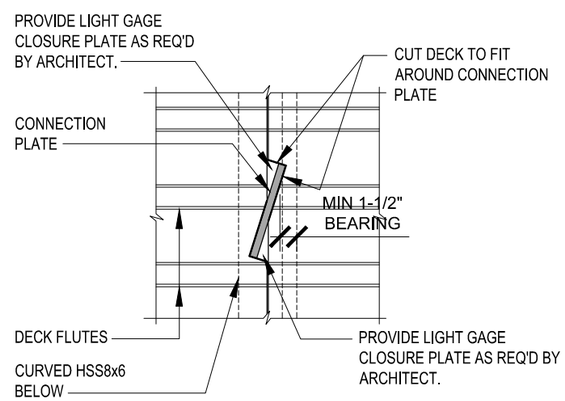

METAL DECK BUTT-JOINT CONNECTION AT CANOPY A — 8 S20.711

SCALE: 3/4"=1'-0"

NOTICE: THE OFFICIAL RECORD OF THIS SHEET IS THE ELECTRONIC FILE SIGNED AND SEALED UNDER RULE 61G15-23.003, F.A.C.

REVISIONS					
DATE	BY	DESCRIPTION	DATE	BY	DESCRIPTION

McElroyEngineering
STRUCTURAL DESIGN GROUP
1835 EDGEWATER DR. ORLANDO, FL. 32804
P: 407.245.8775 | F: 407.245.8744
www.mcelroyeng.com
CERTIFICATE OF AUTHORIZATION - 8822
CRAIG E. McELROY, P.E. NO. 44741

STATE OF FLORIDA
DEPARTMENT OF TRANSPORTATION

ROAD NO.	COUNTY	FINANCIAL PROJECT ID
CFRC P2S	VARIOUS	423446-9-52-01

CENTRAL FLORIDA COMMUTER RAIL TRANSIT (CFCRT) PHASE 2 SOUTH

SECTIONS AND DETAILS

SHEET NO. 193

SAWCUT DEPTH	
SLAB THICKNESS	SAWCUT DEPTH
4"	1"
5"	1 1/4"
6"	1 1/2"
7"	1 3/4"
8"	2"

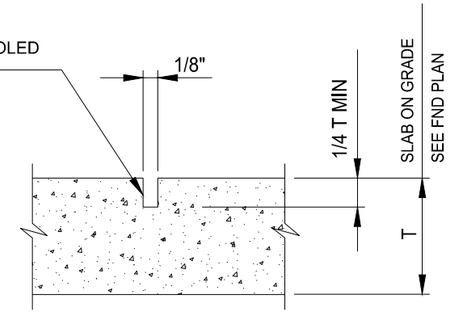

NOTE:
SEE FOUNDATION PLAN FOR LOCATION OF SAWCUT JOINTS.

TYP. SAWCUT JOINT (S.J.) SECTION

SCALE: N.T.S.

SLAB-ON-GRADE ONLY

1 S20.712

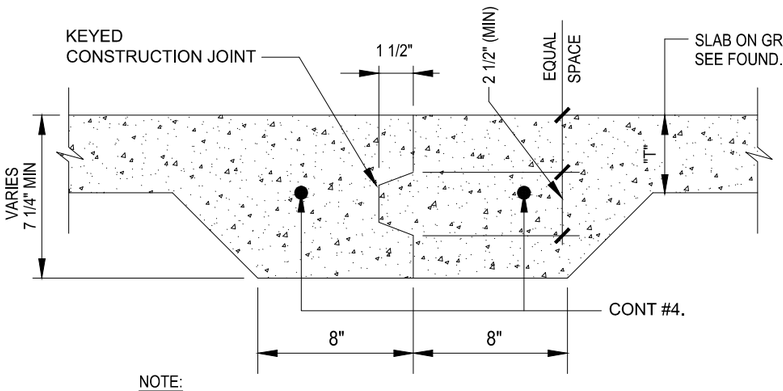

NOTE:
LOCATE CONSTRUCTION JOINTS AT CONTROL JOINT LOCATIONS INDICATED ON THE FOUNDATION PLAN.

TYPICAL SLAB CONSTR. JOINT SECTION

SCALE: 3/4"=1'-0"

SLAB-ON-GRADE ONLY

2 S20.712

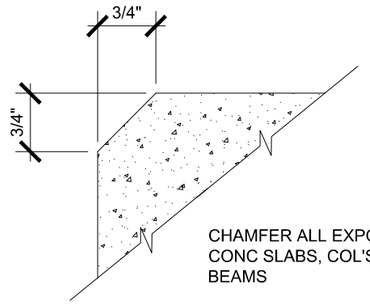

CHAMFER ALL EXPOSED EDGES OF CONC SLABS, COL'S, WALLS, AND BEAMS

TYPICAL CONCRETE CHAMFER DETAIL

SCALE: N.T.S.

3 S20.712

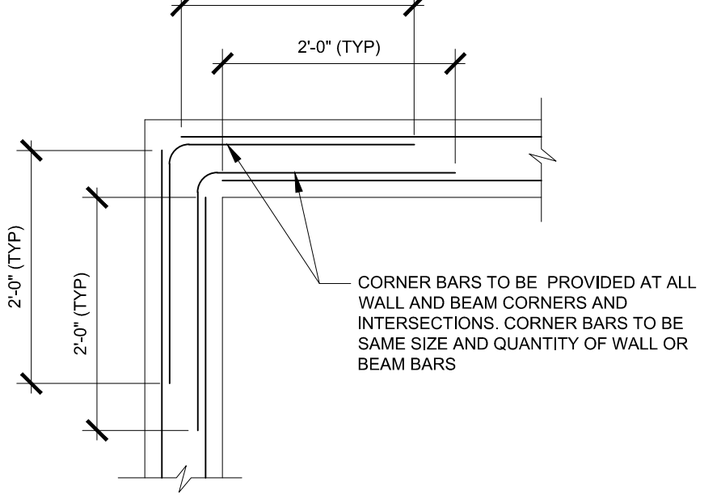

CORNER BARS TO BE PROVIDED AT ALL WALL AND BEAM CORNERS AND INTERSECTIONS. CORNER BARS TO BE SAME SIZE AND QUANTITY OF WALL OR BEAM BARS

TYP. CONCRETE BEAM CORNER BAR DETAIL

SCALE: N.T.S.

4 S20.712

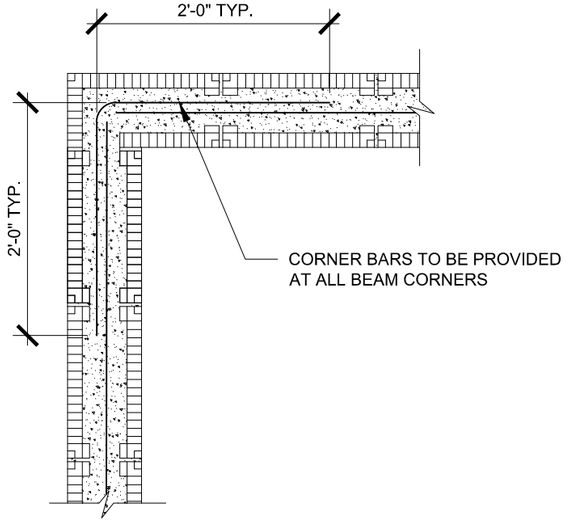

CORNER BARS TO BE PROVIDED AT ALL BEAM CORNERS

TYPICAL MASONRY BEAM CORNER BAR DETAIL

SCALE: N.T.S.

5 S20.712

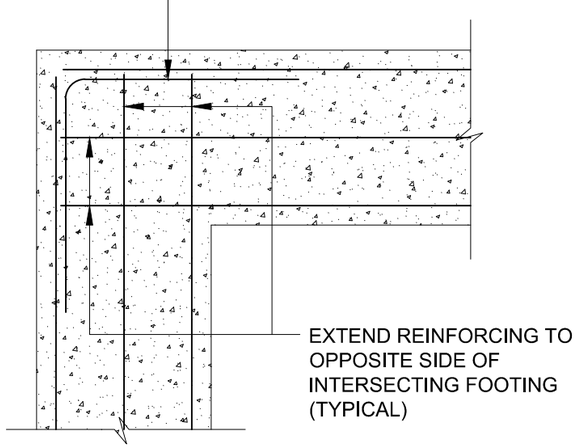

CORNER

TYP. CONT. FOOTING CORNER BAR DETAIL

SCALE: N.T.S.

6 S20.712

NOTICE: THE OFFICIAL RECORD OF THIS SHEET IS THE ELECTRONIC FILE SIGNED AND SEALED UNDER RULE 61G15-23.003, F.A.C.

REVISIONS					
DATE	BY	DESCRIPTION	DATE	BY	DESCRIPTION

McElroyEngineering
STRUCTURAL DESIGN GROUP
1835 EDGEWATER DR. ORLANDO, FL. 32804
P: 407.245.8775 | F: 407.245.8744
www.mcelroyeng.com
CERTIFICATE OF AUTHORIZATION - 8822
CRAIG E. McELROY, P.E. NO. 44741

STATE OF FLORIDA
DEPARTMENT OF TRANSPORTATION

ROAD NO.	COUNTY	FINANCIAL PROJECT ID
CFRC P2S	OSCEOLA	423446-9-52-01

CENTRAL FLORIDA COMMUTER RAIL TRANSIT (CFCRT) PHASE 2 SOUTH

SECTIONS AND DETAILS

SHEET NO. 194

L:\2007-Jobs\107029.01-Central Florida Commuter Rail\CAD-MEP\Sheets E00.701.dwg 5/11/2015 12:35:13 PM chuck.file

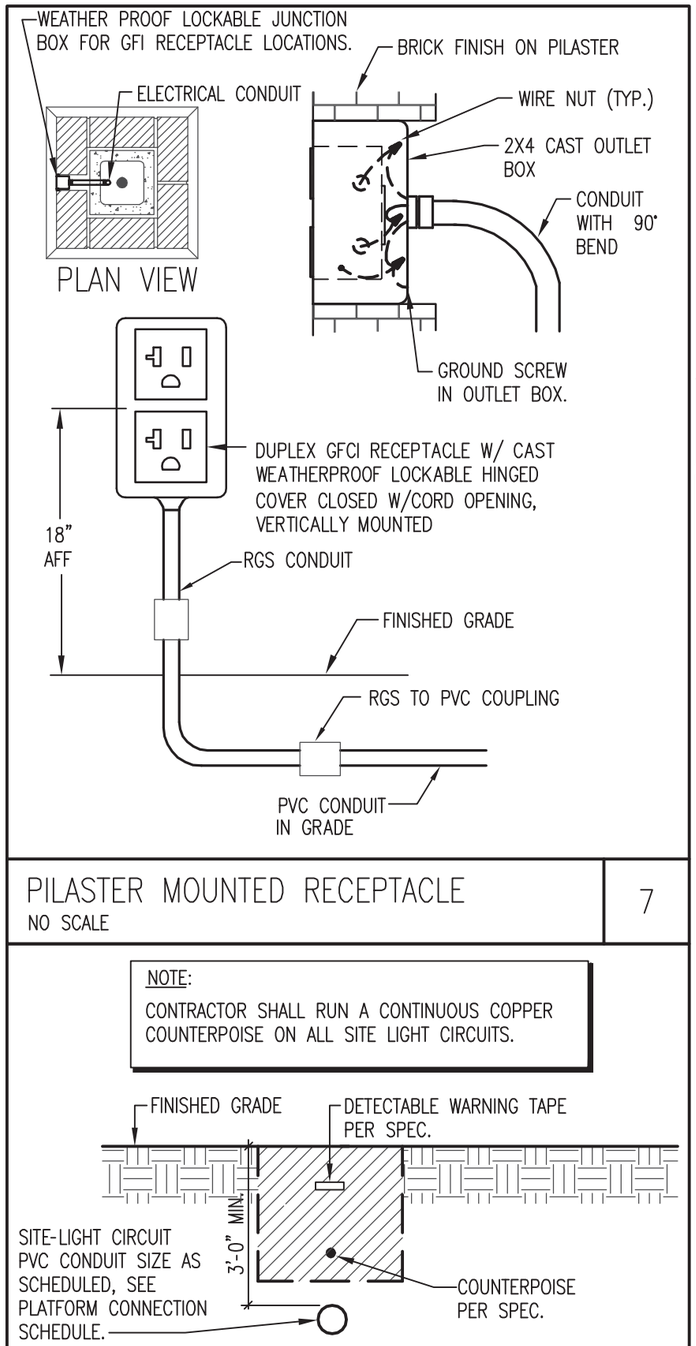

PILASTER MOUNTED RECEPTACLE
NO SCALE — 7

NOTE:
CONTRACTOR SHALL RUN A CONTINUOUS COPPER COUNTERPOISE ON ALL SITE LIGHT CIRCUITS.

SECTION AT SITE LIGHT CIRCUIT
NO SCALE — 6

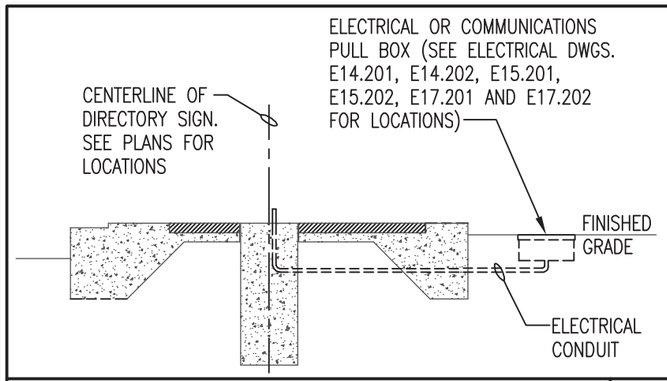

SIGN FOUNDATION
NO SCALE — 4

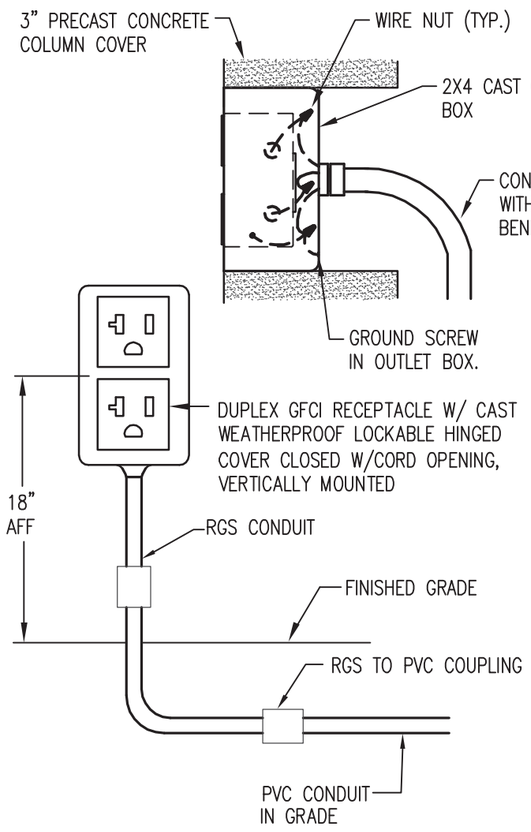

COLUMN MOUNTED RECEPTACLE
NO SCALE — 5

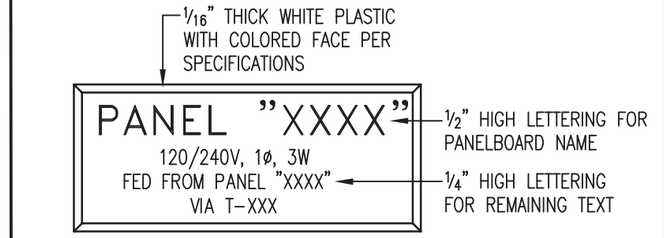

TYPICAL 120/240V PANELBOARD

PANELBOARD NAMEPLATE
NO SCALE — 1

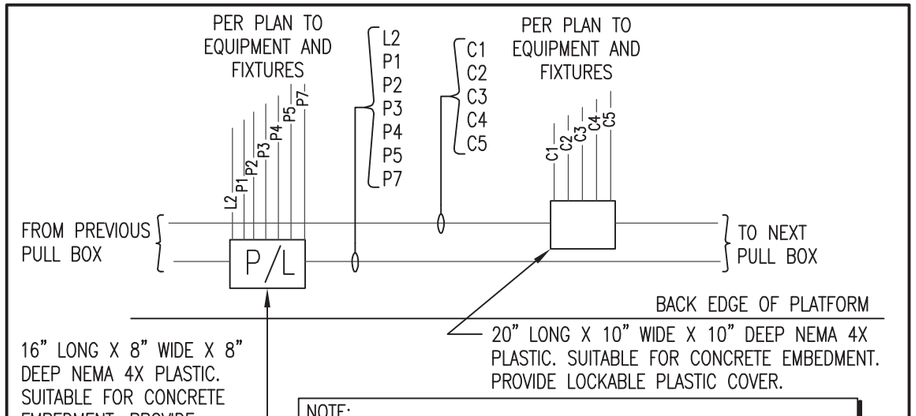

NOTE:
FOR CLARITY, COMMUNICATIONS AND POWER/LIGHTING BOXES ARE NOT DRAWN TO SCALE ON FLOOR PLANS. INSTALL PER DETAIL #3 ON THIS SHEET.

TYPICAL CONDUIT AND PULL BOX PLAN
NO SCALE — 2

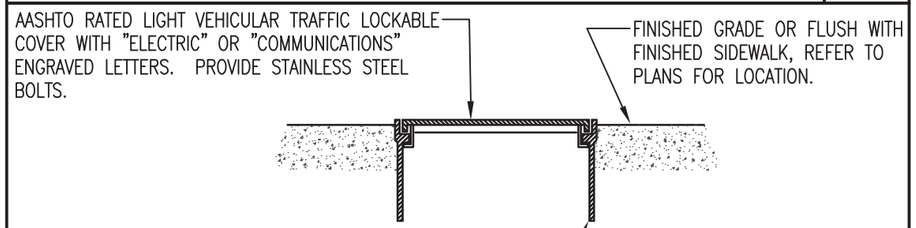

NOTES:
1. NO SPLICES SHALL BE MADE IN PULLBOXES.
2. PULLBOX SHALL BE NON-CONCRETE WITH STACKABLE BOX EXTENSIONS AS REQUIRED.

FLUSH GRADE JUNCTION BOX OR PULL BOX
NO SCALE — 3

REVISIONS					
DATE	BY	DESCRIPTION	DATE	BY	DESCRIPTION

TLC Engineering for Architecture
255 S. Orange Avenue, Suite 1600
Orlando, FL. 32801
T 407.841-9050 F 407.425-7367
Certificate of Authorization No. 15
www.tlc-engineers.com
Victor M Diez PE NO. 55919

STATE OF FLORIDA
DEPARTMENT OF TRANSPORTATION

ROAD NO.	COUNTY	FINANCIAL PROJECT ID
CFRC P2S	VARIOUS	423446-9-52-01

CENTRAL FLORIDA COMMUTER RAIL TRANSIT (CFCRT) PHASE 2 SOUTH

ELECTRICAL DETAILS

SHEET NO. 199

NOTICE: THE OFFICIAL RECORD OF THIS SHEET IS THE ELECTRONIC FILE SIGNED AND SEALED UNDER RULE 61G15-23.003, F.A.C.

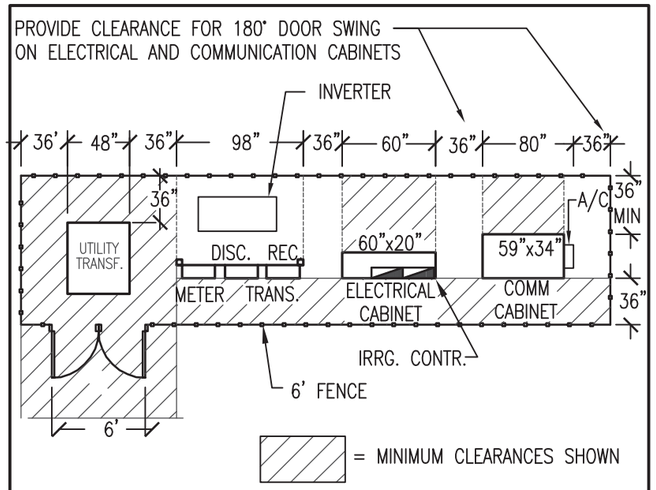

UTILITY YARD DETAILS
NO SCALE

2

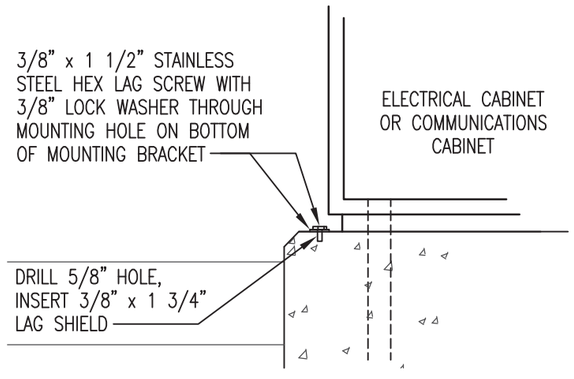

UTILITY YARD DETAILS
NO SCALE

3

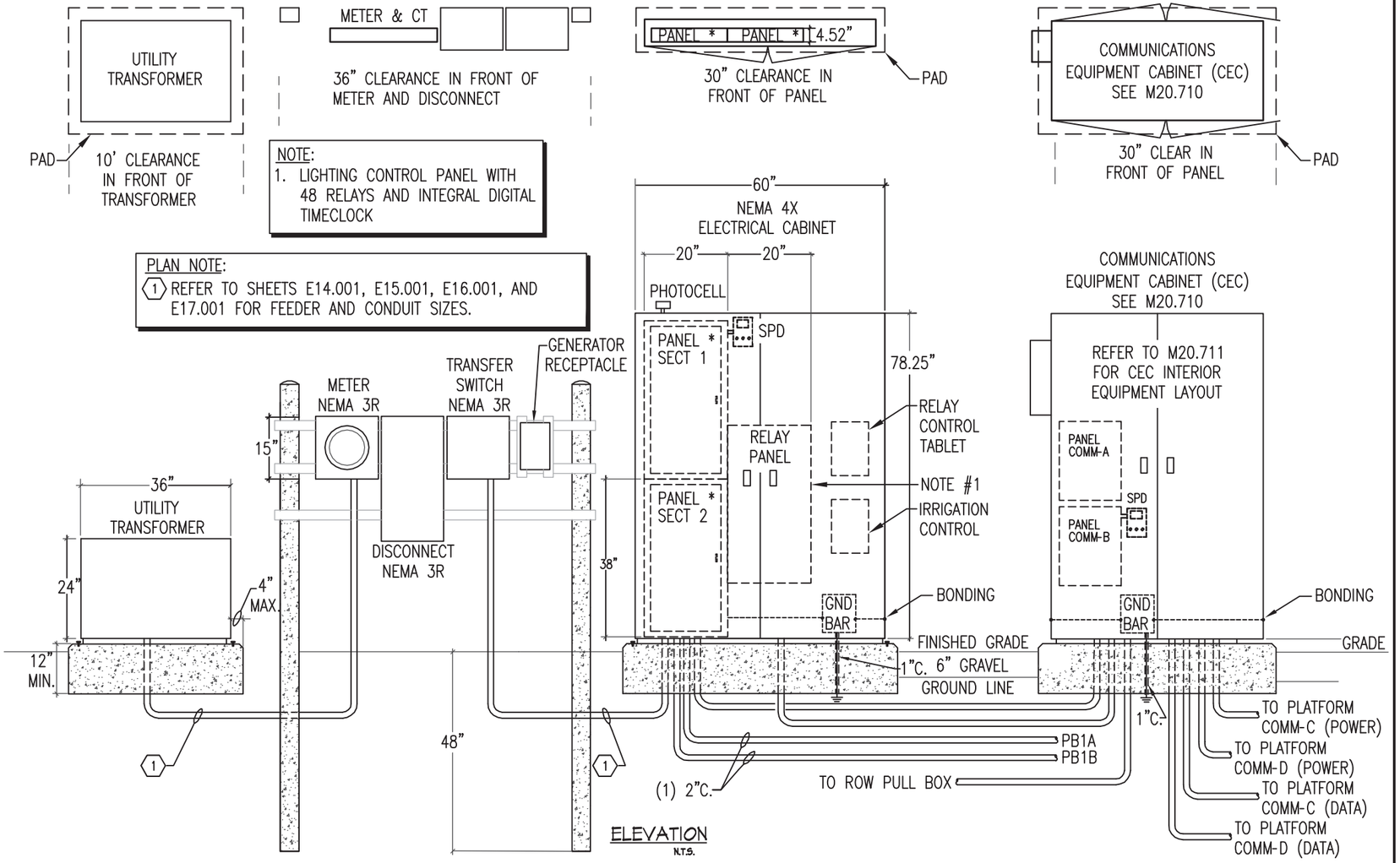

UTILITY YARD DETAILS - PLAN AND ELEVATION - NON PARK AND RIDE STATIONS
SCALE: 1/2" = 1'-0"

1

NOTICE: THE OFFICIAL RECORD OF THIS SHEET IS THE ELECTRONIC FILE SIGNED AND SEALED UNDER RULE 61G15-23.003, F.A.C.

L:\2007-Jobs\107029.01-Central Florida Commuter Rail\CAD-MEP\Sheets E00.702.dwg 5/21/2015 7:31:38 AM chuck.file

REVISIONS					
DATE	BY	DESCRIPTION	DATE	BY	DESCRIPTION

TLC Engineering for Architecture
255 S. Orange Avenue, Suite 1600
Orlando, FL. 32801
T 407.841-9050 F 407.425-7367
Certificate of Authorization No. 15
www.tlc-engineers.com
Victor M Diaz PE NO. 55919

STATE OF FLORIDA
DEPARTMENT OF TRANSPORTATION

ROAD NO.	COUNTY	FINANCIAL PROJECT ID
CFRC P2S	VARIOUS	423446-9-52-01

CENTRAL FLORIDA COMMUTER RAIL TRANSIT (CFCRT) PHASE 2 SOUTH

ELECTRICAL DETAILS

SHEET NO.
200

L:\2007-Jobs\107029.01-Central Florida Commuter Rail\CAD-MEP\Sheets E00.703.dwg 5/11/2015 12:36:34 PM chuck.file

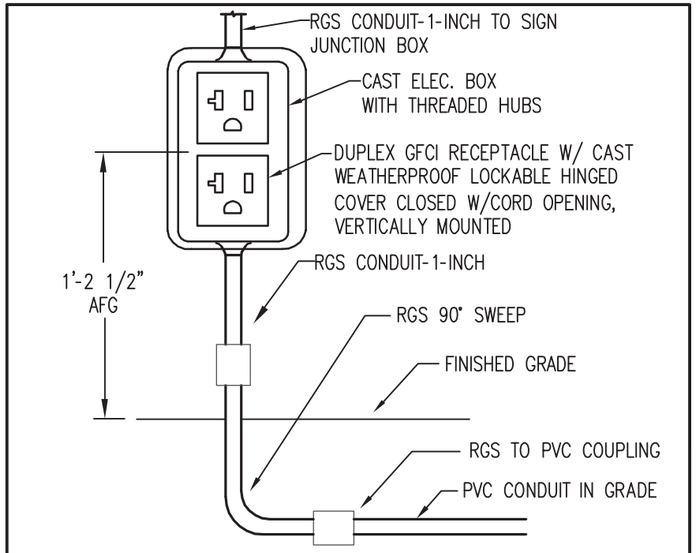

SIGN PEDESTAL MOUNTED RECEPTACLE — 5
NO SCALE

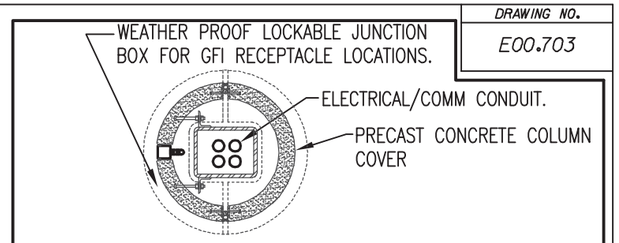

ALL STATION COLUMNS DESIGNATED ELEC/COMM OR DOWNSPOUT. SEE A14.201, A14.202, A15.201, A15.202, A16.201, A16.202, A17.201, AND A17.202. IF NO CONDUITS ARE SHOWN FOR ELEC/COMM COLUMN, PROVIDE (2) 1"C FOR FUTURE USE STUBBED INSIDE AT TOP OF COLUMN AND UNDERGROUND 36" BEYOND EDGE OF PLATFORM.

BASE PLATE TEMPLATE - CANOPY "A" — 1
NO SCALE

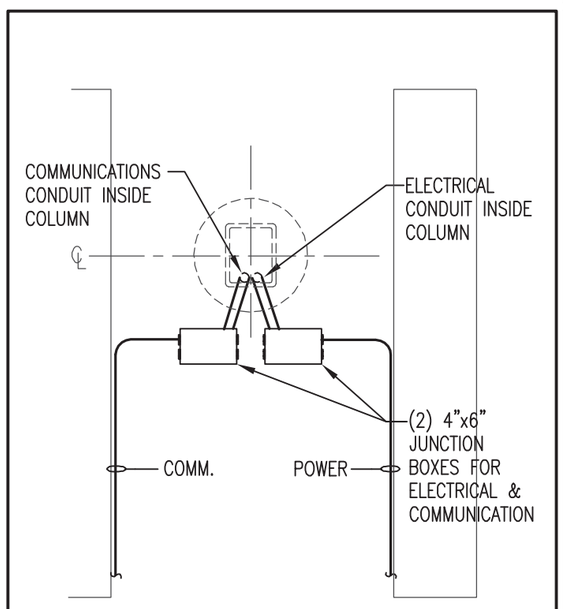

TOP OF BASE PLATE-CANOPY "A" — 4
NO SCALE

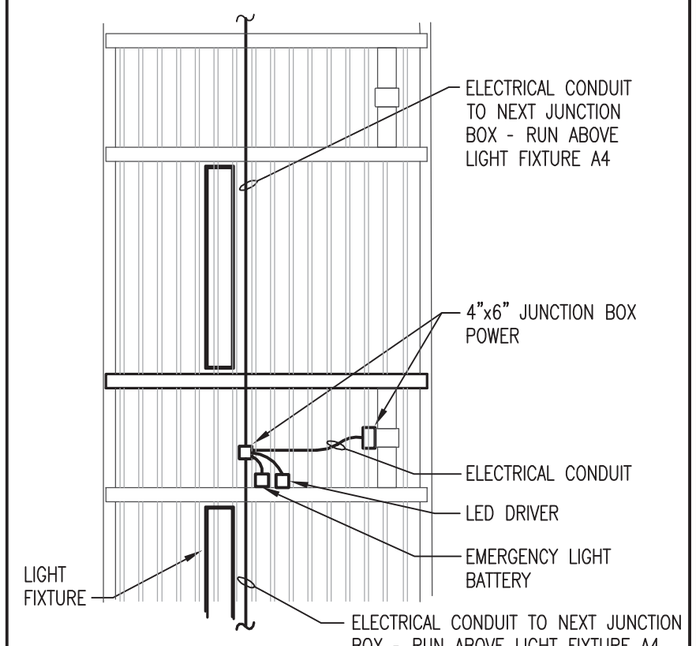

CANOPY TYPE "A" — 3
NO SCALE

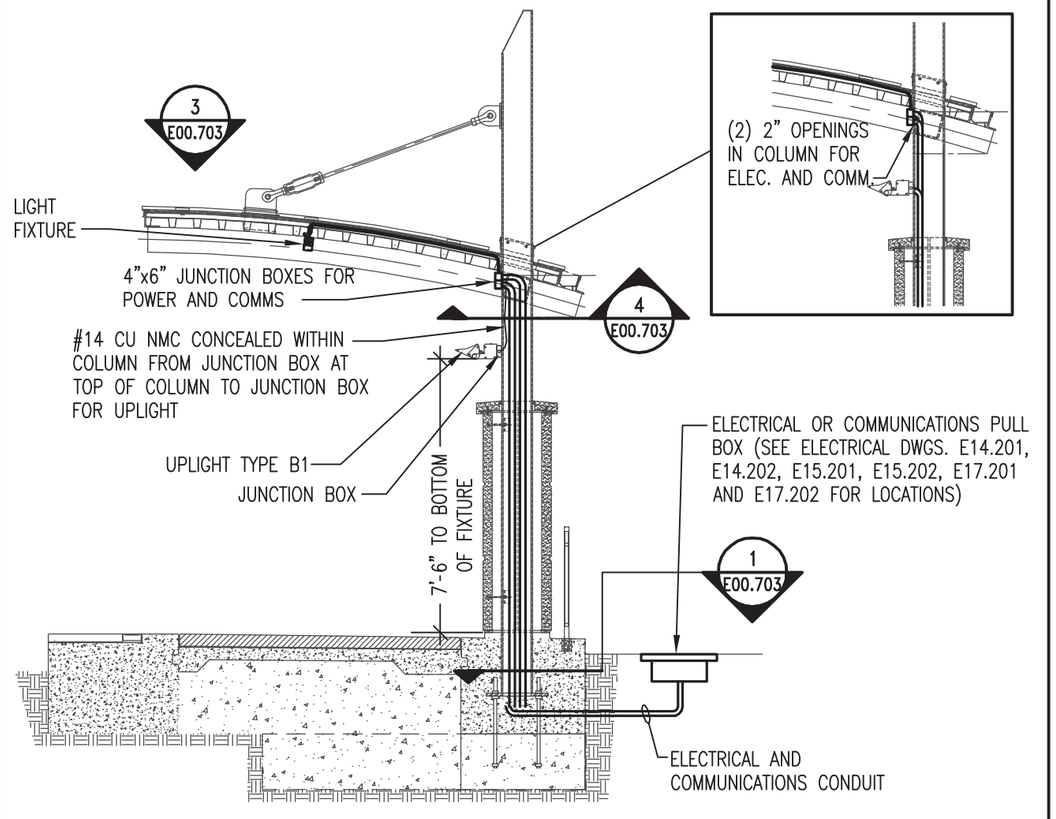

TYPICAL PLATFORM SECTION - CANOPY TYPE "A" — 2
NO SCALE

NOTICE: THE OFFICIAL RECORD OF THIS SHEET IS THE ELECTRONIC FILE SIGNED AND SEALED UNDER RULE 61G15-23.003, F.A.C.

REVISIONS					
DATE	BY	DESCRIPTION	DATE	BY	DESCRIPTION

TLC Engineering for Architecture
255 S. Orange Avenue, Suite 1600
Orlando, FL. 32801
T 407.841-9050 F 407.425-7367
Certificate of Authorization No. 15
www.tlc-engineers.com
Victor M Diez PE NO. 55919

STATE OF FLORIDA
DEPARTMENT OF TRANSPORTATION

ROAD NO.	COUNTY	FINANCIAL PROJECT ID
CFRC P2S	VARIOUS	423446-9-52-01

CENTRAL FLORIDA COMMUTER RAIL TRANSIT (CFCRT) PHASE 2 SOUTH

ELECTRICAL DETAILS

SHEET NO. 201

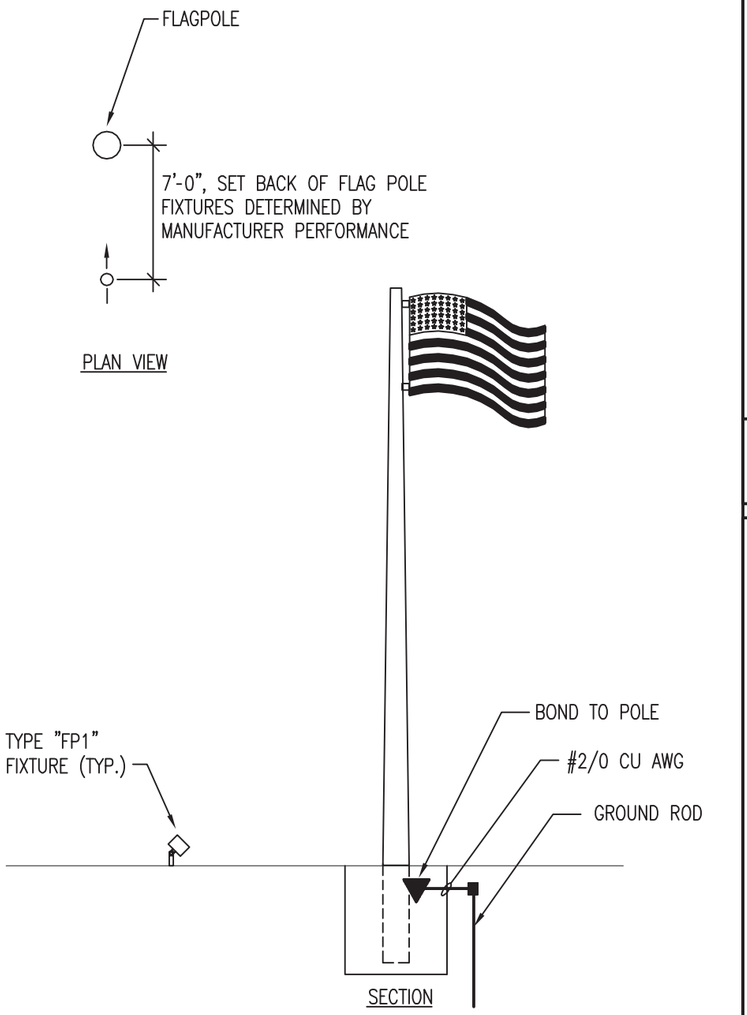

FLAGPOLE LIGHTING AND GROUNDING DETAIL

NO SCALE

5

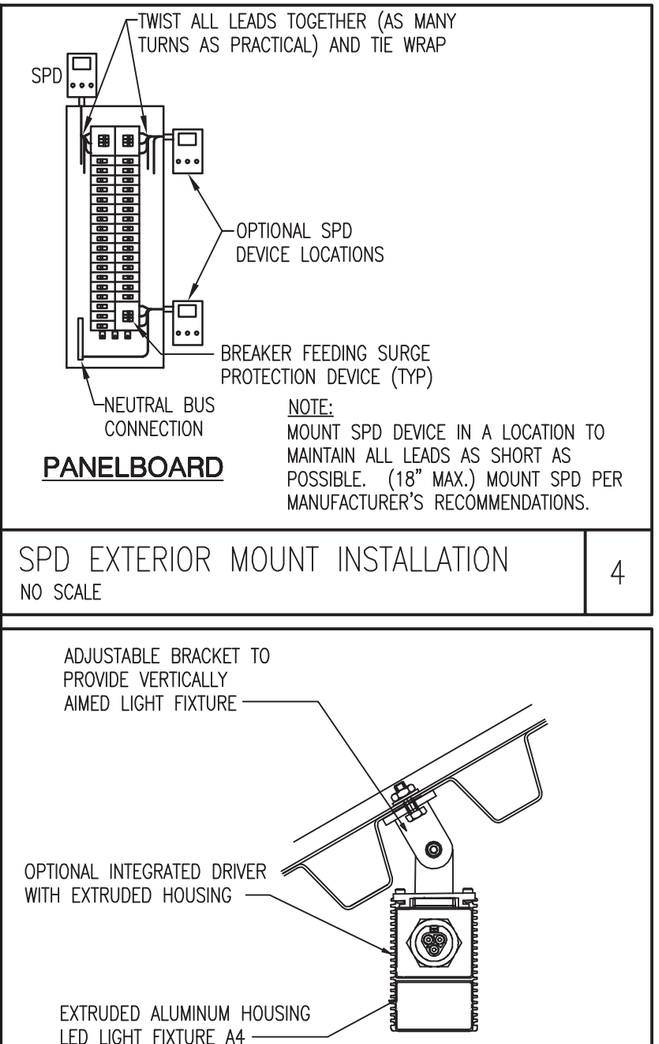

NOTE:
MOUNT SPD DEVICE IN A LOCATION TO MAINTAIN ALL LEADS AS SHORT AS POSSIBLE. (18" MAX.) MOUNT SPD PER MANUFACTURER'S RECOMMENDATIONS.

SPD EXTERIOR MOUNT INSTALLATION

NO SCALE

4

LIGHT FIXTURE TYPE 'A4' FIXTURE MOUNTING

NO SCALE

3

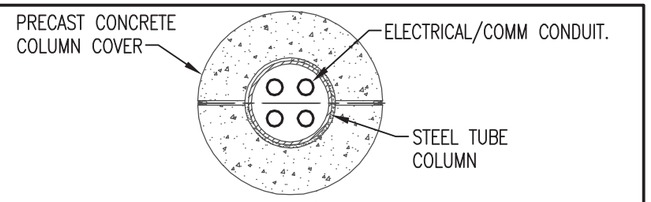

ALL STATION COLUMNS DESIGNATED ELEC/COMM OR DOWNSPOUT. SEE A14.201, A14.202, A15.201, A15.202, A16.201, A16.202, A17.201, AND A17.202. IF NO CONDUITS ARE SHOWN FOR ELEC/COMM COLUMN, PROVIDE (2) 1"C FOR FUTURE USE STUBBED INSIDE AT TOP OF COLUMN AND UNDERGROUND 36" BEYOND EDGE OF PLATFORM.

BASE PLATE TEMPLATE - CANOPY "F"

NO SCALE

1

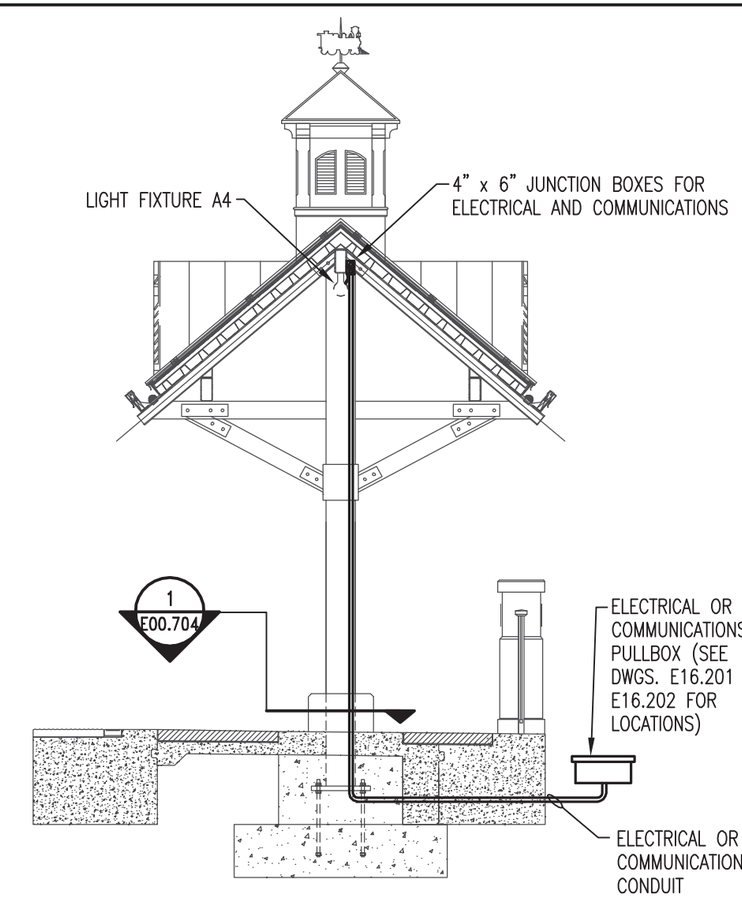

PLATFORM SECTION - CANOPY TYPE "F

NO SCALE

2

DRAWING NO. E00.704

NOTICE: THE OFFICIAL RECORD OF THIS SHEET IS THE ELECTRONIC FILE SIGNED AND SEALED UNDER RULE 61G15-23.003, F.A.C.

L:\2007-Jobs\107029.01-Central Florida Commuter Rail\CAD-MEP\Sheets E00.704.dwg 5/11/2015 12:37:14 PM chuck.file

REVISIONS					
DATE	BY	DESCRIPTION	DATE	BY	DESCRIPTION

TLC Engineering for Architecture
255 S. Orange Avenue, Suite 1600
Orlando, FL. 32801
T 407.841-9050 F 407.425-7367
Certificate of Authorization No. 15
www.tlc-engineers.com
Victor M Diaz PE NO. 55919

STATE OF FLORIDA
DEPARTMENT OF TRANSPORTATION

ROAD NO.	COUNTY	FINANCIAL PROJECT ID
CFRC P2S	VARIOUS	423446-9-52-01

CENTRAL FLORIDA COMMUTER RAIL TRANSIT (CFCRT) PHASE 2 SOUTH

ELECTRICAL DETAILS

SHEET NO. 202

L:\2007-Jobs\107029.01-Central Florida Commuter Rail\CAD-MEP\Sheets\E00.705.dwg 5/11/2015 12:37:54 PM chuck.file

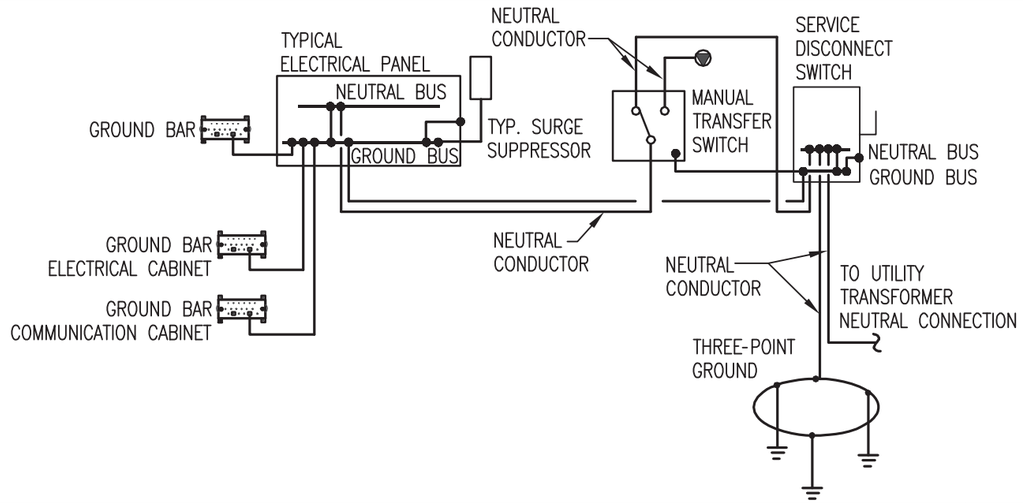

GROUNDING RISER DIAGRAM WITH MANUAL TRANSFER SWITCH

NO SCALE

5

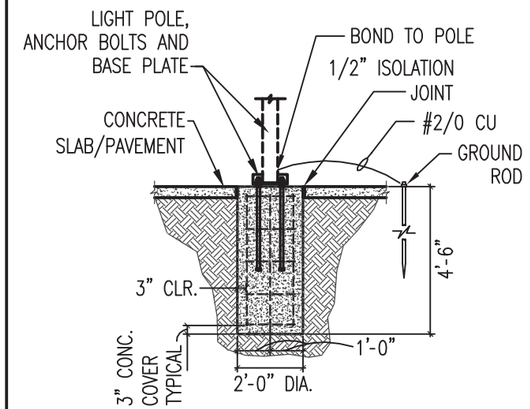

24' HIGH LIGHT POLE FOUNDATION

NO SCALE

3

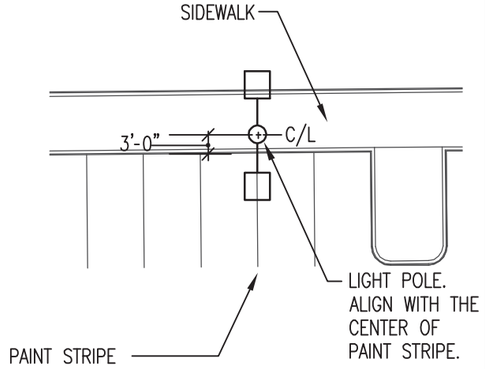

TYPICAL FOR ALL FIXTURES TYPE C, SA1, AND SA2

LIGHT POLE MOUNTING DETAIL

NO SCALE

1

120 VOLT CIRCUIT WIRING FOR <3% VOLTAGE DROP (PER FBC ENERGY CONSERVATION 505.7.3.1)					
	#12	#10	#8	#6	#4
30 AMP CIRCUIT:	DISTANCES (FT)				
2880VA		69	105	164	254
2760VA		72	109	167	265
2640VA		74	114	179	277
2520VA		79	120	188	290
2400VA		83	126	197	305
2280VA		87	132	207	321
2160VA		92	140	219	338
2040VA		97	148	232	358
20 OR 30 AMP CIRCUIT:	DISTANCES (FT)				
1920VA	62	103	157	246	381
1800VA	66	108	168	263	405
1680VA	71	118	180	282	435
1560VA	77	127	194	303	469
1440VA	83	138	210	329	508
1320VA	91	150	229	359	554
1200VA	100	165	252	395	610
1080VA	111	180	280	438	677
960VA	125	205	315	493	762
840VA	143	230	360	564	871
720VA	167	275	420	658	1016
600VA	200	330	505	790	1220
480VA	250	415	631	987	1525
360VA	334	550	841	1316	2033
240VA	501	830	1262	1975	3050
120VA	1003	1660	2525	3950	6101

208 VOLT CIRCUIT WIRING FOR <3% VOLTAGE DROP (PER FBC ENERGY CONSERVATION 505.7.3.1)					
	#12	#10	#8	#6	#4
30 AMP CIRCUIT:	DISTANCES (FT)				
4992VA		126	191	298	457
4784VA		130	199	311	477
4576VA		137	208	325	499
4368VA		144	218	340	523
4160VA		151	229	357	549
3952VA		159	241	376	578
3774VA		168	255	397	610
3536VA		178	270	420	646
20 OR 30 AMP CIRCUIT:	DISTANCES (FT)				
3328VA	114	189	286	445	686
3120VA	121	201	303	476	731
2912VA	130	215	326	509	783
2704VA	140	232	352	550	844
2496VA	152	251	381	596	915
2288VA	166	274	416	650	998
2080VA	182	301	456	714	1096
1872VA	203	336	507	793	1219
1664VA	229	378	572	892	1372
1456VA	262	431	655	1020	1568
1248VA	305	504	762	1190	1829
1040VA	365	604	915	1429	2195
832VA	457	757	1143	1786	2744
624VA	610	1008	1524	2382	3658
416VA	916	1514	2292	3573	5487
208VA	1833	3028	4581	7148	10974

240 VOLT CIRCUIT WIRING FOR <3% VOLTAGE DROP (PER FBC ENERGY CONSERVATION 505.7.3.1)					
	#12	#10	#8	#6	#4
30 AMP CIRCUIT:	DISTANCES (FT)				
5760VA		159	242	379	584
5520VA		166	251	384	610
5280VA		170	262	412	637
5040VA		182	276	432	667
4800VA		191	290	453	702
4560VA		200	304	476	738
4320VA		212	322	504	777
4080VA		223	340	534	828
20 OR 30 AMP CIRCUIT:	DISTANCES (FT)				
3840VA	143	237	361	566	876
3600VA	152	248	386	605	932
3360VA	163	271	414	649	1001
3120VA	177	292	446	697	1079
2880VA	191	317	483	757	1168
2640VA	209	345	527	826	1274
2400VA	230	380	580	911	1403
2160VA	255	414	644	1007	1557
1920VA	288	472	725	1134	1753
1680VA	329	530	828	1297	2003
1440VA	384	633	966	1513	2337
1200VA	460	759	1162	1817	2806
960VA	575	955	1451	2270	3508
720VA	768	1265	1934	3027	4676
480VA	1152	1909	2903	4543	7015
240VA	2307	3818	5808	9085	14032

THE WIRE SIZE FOR 120-VOLT, 208-VOLT OR 240-VOLT, SINGLE PHASE, 20 AMP OR 30 AMP BRANCH CIRCUITS SHALL BE SELECTED FROM THE FOLLOWING TABLES:

BRANCH CIRCUIT VOLTAGE DROP TABLES

NO SCALE

6

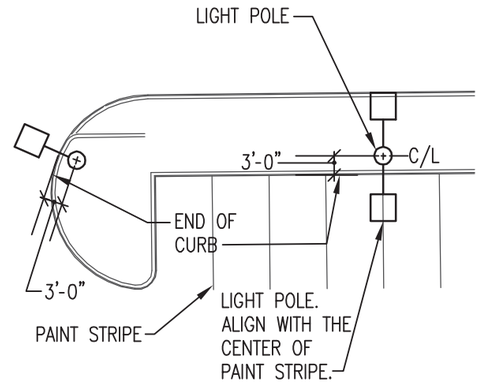

TYPICAL FOR ALL FIXTURES TYPE C, SA1, AND SA2

LIGHT POLE MOUNTING DETAIL

NO SCALE

2

REVISIONS					
DATE	BY	DESCRIPTION	DATE	BY	DESCRIPTION

TLC Engineering for Architecture
255 S. Orange Avenue, Suite 1600
Orlando, FL. 32801
T 407.841-9050 F 407.425-7367
Certificate of Authorization No. 15
www.tlc-engineers.com
Victor M Diez PE NO. 55919

STATE OF FLORIDA
DEPARTMENT OF TRANSPORTATION

ROAD NO.	COUNTY	FINANCIAL PROJECT ID
CFRC P2S	VARIOUS	423446-9-52-01

CENTRAL FLORIDA COMMUTER RAIL TRANSIT (CFCRT) PHASE 2 SOUTH

ELECTRICAL DETAILS

SHEET NO.
203

NOTICE: THE OFFICIAL RECORD OF THIS SHEET IS THE ELECTRONIC FILE SIGNED AND SEALED UNDER RULE 61G15-23.003, F.A.C.

DRAWING NO.
E00.706

Name: MEADOW WOODS
(SECT. 1)

MAIN BREAKER: 225 AMPS | 2 POLE | 1 PHASE
MAIN LUGS: AMPS | 3 WIRE
K.A.I.C. : 22,000 AMPS | 208Y/120V
SURFACE MTD: X | 480Y/277V
FLUSH MTD: | X 240/120V

Project Name: CFCRT
Project Number: 107029
Fed From: UTILITY XFMR

PROVIDE FEED THRU LUGS

NOTES	CKT NO	IDENTIFICATION	CODE	LOAD/PHASE (KVA) A	LOAD/PHASE (KVA) B	CIRCUIT BREAKER TRIP	CIRCUIT BREAKER POLES	CIRCUIT BREAKER POLES	CIRCUIT BREAKER TRIP	LOAD/PHASE (KVA) A	LOAD/PHASE (KVA) B	CODE	IDENTIFICATION	CKT NO	NOTES
	1	SPARE	S	0.0		20	1	1	20	0.0		S	SPARE	2	
	3	SPARE	S		0.0	20	1	1	20		0.0	S	SPARE	4	
	5	CANOPY LINEAR LTG PLATFORM 'A'	L	0.4		20	1	1	20	0.9		R	RECEPTACLES PLATFORM 'A'	6	
	7	CANOPY LINEAR LTG PLATFORM 'A'	L		0.7	20	1	1	20		0.9	R	RECEPTACLES PLATFORM 'B'	8	
	9	CANOPY LINEAR LTG PLATFORM 'B'	L	0.4		20	1	1	20	0.1		L	CANOPY LIGHTING PLATFORM 'B'	10	
	11	CANOPY LINEAR LTG PLATFORM 'B'	L		0.7	20	1	1	20		0.1	L	CANOPY UPLIGHTING PLATFORM 'B'	12	
	13	CANOPY LINEAR LTG PLATFORM 'A'	L	0.1		20	1	1	20	0.1		L	CANOPY UPLIGHTING PLATFORM 'B'	14	
	15	CANOPY UPLTG PLATFORM 'A'	L		0.1	20	1	1	20		0.1	L	CANOPY UPLIGHTING PLATFORM 'B'	16	
	17	CANOPY UPLTG PLATFORM 'A'	L	0.1		20	1	1	20	0.1		L	CANOPY UPLIGHTING PLATFORM 'B'	18	
	19	CANOPY UPLTG PLATFORM 'A'	L		0.1	20	1	1	20		0.0	S	SPARE	20	
	21	CANOPY UPLTG PLATFORM 'A'	L	0.1		20	1	2	20	0.5		L	SITE LIGHTING	22	
	23	SPARE	S		0.0	20	1	-	-		0.5	L	--	24	
	25	SITE LIGHTING	L	0.5		20	1	2	20	0.4		L	SITE LIGHTING	26	
	27	SITE LIGHTING	L		0.5	20	1	-	-		0.4	L	--	28	
	29	SITE LIGHTING	L	0.5		20	1	2	20	0.5		L	SITE LIGHTING	30	
	31	SITE LIGHTING	L		0.3	20	1	-	--		0.5	L	--	32	
	33	SITE LIGHTING	L	0.3		20	1	2	20	0.5		L	SITE LIGHTING	34	
	35	SITE LIGHTING	L		0.3	20	1	-	--		0.5	L	--	36	
	37	SIGN LIGHTING	L	0.8		20	1	1	20	0.1		O	TIMECLOCK	38	
	39	COMM 'A'	O		7.0	100	2	2	30			O	SPD	40	
	41	---	O	7.0		--	-	-	--			O	---	42	
				10.1	9.7					3.0	2.9				

	CONN. LOAD (KVA)	ADJUST. FACTOR	DEMAND FACTOR	DEMAND LOAD (KVA)
LIGHTING (L)	25.0	1.25	1.00	31.2
RECEPTACLES (R)	1.8	---	NEC	1.8
LARGEST MOTOR (M)	0.0	1.25	1.00	0.0
ALL OTHER MOTORS (M)	0.0	1.00	1.00	0.0
HEATING (H)	0.0	1.00	1.00	0.0
COOLING (C)	0.0	1.00	1.00	0.0
OTHER (O)	15.2	0.75	1.00	11.4
ELEVATOR (V)	0.0	1.00	1.00	0.0
SPARES (S)	0.0	1.00	1.00	0.0

TOTAL CONNECTED LOAD: 41.9 KVA
TOTAL DEMAND LOAD: 44.4 KVA
DEMAND AMPS: 184.8 AMPS

REVISIONS

DATE	BY	DESCRIPTION	DATE	BY	DESCRIPTION

TLC Engineering for Architecture
255 S. Orange Avenue, Suite 1600
Orlando, FL. 32801
T 407.841-9050 F 407.425-7367
Certificate of Authorization No. 15
www.tlc-engineers.com
Victor M Diez PE NO. 55919

STATE OF FLORIDA
DEPARTMENT OF TRANSPORTATION

ROAD NO.	COUNTY	FINANCIAL PROJECT ID
CFRC P2S	ORANGE	423446-9-52-01

CENTRAL FLORIDA COMMUTER RAIL TRANSIT (CFCRT) PHASE 2 SOUTH

ELECTRICAL PANEL SCHEDULES

SHEET NO. 204

NOTICE: THE OFFICIAL RECORD OF THIS SHEET IS THE ELECTRONIC FILE SIGNED AND SEALED UNDER RULE 61G15-23.003, F.A.C.

L:\2007-Jobs\107029.01-Central Florida Commuter Rail\CAD-MEP\Sheets E00.706.dwg 5/11/2015 12:46:19 PM chuck.file

L:\2007-Jobs\107029.01-Central Florida Commuter Rail\CAD-MEP\Sheets E00.707.dwg 5/21/2015 9:02:28 AM chuck.file

DRAWING NO.
E00.707

Name: MEADOW WOODS
(SECT. 2)

MAIN BREAKER:	-	AMPS	2	POLE	1	PHASE	Project Name: CFCRT
MAIN LUGS:	225	AMPS			3	WIRE	Project Number: 107029
K.A.I.C. :	22,000	AMPS				208Y/120V	Fed From: UTILITY XFMR
SURFACE MTD:	X					480Y/277V	
FLUSH MTD:					X	240/120V	PROVIDE FEED THRU LUGS

NOTES	CKT NO	IDENTIFICATION	CODE	LOAD/PHASE (KVA) A	LOAD/PHASE (KVA) B	CIRCUIT BREAKER TRIP	CIRCUIT BREAKER POLES	CIRCUIT BREAKER POLES	CIRCUIT BREAKER TRIP	LOAD/PHASE (KVA) A	LOAD/PHASE (KVA) B	CODE	IDENTIFICATION	CKT NO	NOTES
	43	SIGN LIGHTING	L	0.8		20	1	2	20	0.6		L	SITE LIGHTING	44	
	45	SIGN LIGHTING	L		0.8	20	1	-	--		0.6	L	--	46	
	47	SIGN LIGHTING	L	0.8		20	1	2	20	0.4		L	SITE LIGHTING	48	
	49	SITE LIGHTING	L		0.5	20	2	-	--		0.4	L	--	50	
	51	--	L	0.5		--	-	2	20	0.5		L	SITE LIGHTING	52	
	53	SITE LIGHTING	L		0.4	20	2	-	--		0.5	L	--	54	
	55	--	L	0.4		--	-	1	20	0.0		S	SPARE	56	
	57	SITE LIGHTING	L		0.8	20	2	1	20		0.0	S	SPARE	58	
	59	--	L	0.8		--	-	2	20	0.5		L	SITE LIGHTING	60	
	61	SITE LIGHTING	L		0.4	20	2	-	--		0.5	L	--	62	
	63	--	L	0.4		--	-	1	20	0.5		L	SITE LIGHTING	64	
	65	SITE LIGHTING	L		0.6	20	2	1	20		0.5	L	SITE LIGHTING	66	
	67	--	L	0.6		--	-	1	20	0.4		L	SITE LIGHTING	68	
	69	SPARE	S		0.0	20	1	1	20		0.3	L	SITE LIGHTING	70	
	71	IRRIGATION CONTROL	O	0.1		20	1	1	20	0.3		L	SITE LIGHTING	72	
	73	SITE LIGHTING	L		0.5	20	2	1	20		0.2	L	SITE LIGHTING	74	
	75	--	L	0.5		--	-	1	20	0.5		L	SITE LIGHTING	76	
	77	SPARE	S		0.0	20	1	1	20		0.4	L	SITE LIGHTING	78	
	79	SPARE	S	0.0		20	1	1	20	0.0		S	SPARE	80	
	81	SPARE	S		0.0	20	1	1	20		0.0	S	SPARE	82	
	83	SPARE	S	0.0		20	1	1	20	0.0		S	SPARE	84	
				4.7	3.8					3.6	3.2				

	CONN. LOAD (KVA)	ADJUST. FACTOR	DEMAND FACTOR	DEMAND LOAD (KVA)
LIGHTING (L)	15.2	1.25	1.00	19.0
RECEPTACLES (R)	0.0	---	NEC	0.0
LARGEST MOTOR (M)	0.0	1.25	1.00	0.0
ALL OTHER MOTORS (M)	0.0	1.00	1.00	0.0
HEATING (H)	0.0	1.00	1.00	0.0
COOLING (C)	0.0	1.00	1.00	0.0
OTHER (O)	0.1	0.75	1.00	0.0
ELEVATOR (V)	0.0	1.00	1.00	0.0
SPARES (S)	0.0	1.00	1.00	0.0

TOTAL CONNECTED LOAD:	15.2	KVA
TOTAL DEMAND LOAD:	19.0	KVA
DEMAND AMPS:	79.2	AMPS

NOTICE: THE OFFICIAL RECORD OF THIS SHEET IS THE ELECTRONIC FILE SIGNED AND SEALED UNDER RULE 61G15-23.003, F.A.C.

REVISIONS

DATE	BY	DESCRIPTION	DATE	BY	DESCRIPTION

TLC Engineering for Architecture
255 S. Orange Avenue, Suite 1600
Orlando, FL. 32801
T 407.841-9050 F 407.425-7367
Certificate of Authorization No. 15
www.tlc-engineers.com
Victor M Diaz PE NO. 55919

STATE OF FLORIDA
DEPARTMENT OF TRANSPORTATION

ROAD NO.	COUNTY	FINANCIAL PROJECT ID
CFRC P2S	ORANGE	423446-9-52-01

CENTRAL FLORIDA COMMUTER RAIL TRANSIT (CFCRT) PHASE 2 SOUTH

ELECTRICAL PANEL SCHEDULES

SHEET NO.
205

DRAWING NO.
E00.708

Name: OSCEOLA PKWY
(SECT. 1)

MAIN BREAKER:	225	AMPS	2	POLE	1	PHASE	
MAIN LUGS:		AMPS			3	WIRE	
K.A.I.C. :	22,000	AMPS				208Y/120V	
SURFACE MTD:	X					480Y/277V	
FLUSH MTD:					X	240/120V	

Project Name: CFCRT
Project Number: 107029
Fed From: UTILITY XFMR

PROVIDE FEED THRU LUGS

NOTES	CKT NO	IDENTIFICATION	CODE	LOAD/PHASE (KVA) A	LOAD/PHASE (KVA) B	CIRCUIT BREAKER TRIP	CIRCUIT BREAKER POLES	CIRCUIT BREAKER POLES	CIRCUIT BREAKER TRIP	LOAD/PHASE (KVA) A	LOAD/PHASE (KVA) B	CODE	IDENTIFICATION	CKT NO	NOTES
	1	SPARE	S	0.0		20	1	1	20	0.0		S	SPARE	2	
	3	SPARE	S		0.0	20	1	1	20		0.0	S	SPARE	4	
	5	CANOPY LINEAR LTG PLATFORM 'A'	L	0.4		20	1	1	20	0.9		R	RECEPTACLES PLATFORM 'A'	6	
	7	CANOPY LINEAR LTG PLATFORM 'A'	L		0.7	20	1	1	20		0.9	R	RECEPTACLES PLATFORM 'B'	8	
	9	CANOPY LINEAR LTG PLATFORM 'B'	L	0.4		20	1	1	20	0.1		L	CANOPY LIGHTING PLATFORM 'B'	10	
	11	CANOPY LINEAR LTG PLATFORM 'B'	L		0.7	20	1	1	20		0.1	L	CANOPY UPLIGHTING PLATFORM 'B'	12	
	13	CANOPY LINEAR LTG PLATFORM 'A'	L	0.1		20	1	1	20	0.1		L	CANOPY UPLIGHTING PLATFORM 'B'	14	
	15	CANOPY UPLTG PLATFORM 'A'	L		0.1	20	1	1	20		0.1	L	CANOPY UPLIGHTING PLATFORM 'B'	16	
	17	CANOPY UPLTG PLATFORM 'A'	L	0.1		20	1	1	20	0.1		L	CANOPY UPLIGHTING PLATFORM 'B'	18	
	19	CANOPY UPLTG PLATFORM 'A'	L		0.1	20	1	1	20		0.0	S	SPARE	20	
	21	CANOPY UPLTG PLATFORM 'A'	L	0.1		20	1	1	20	0.5		L	SITE LIGHTING	22	
	23	SPARE	S		0.0	20	1	1	20		0.5	L	SITE LIGHTING	24	
	25	SITE LIGHTING	L	0.5		20	1	1	20	0.4		L	SITE LIGHTING	26	
	27	SITE LIGHTING	L		0.5	20	1	2	20		0.6	L	SITE LIGHTING	28	
	29	SIGN LIGHTING	L	0.5		20	1	-	--	0.6		L	--	30	
	31	SITE LIGHTING	L		0.3	20	1	2	20		0.4	L	SITE LIGHTING	32	
	33	SITE LIGHTING	L	0.3		20	1	-	--	0.4		L	--	34	
	35	SITE LIGHTING	L		0.3	20	2	1	20		0.0	S	SPARE	36	
	37	SITE LIGHTING	L	0.3		--	-	1	20	0.1		O	TIMECLOCK	38	
	39	COMM 'A'	O		7.0	100	2	2	30			O	SPD	40	
	41	---	O	7.0		--	-	-	--			O	---	42	
				9.6	9.7					3.0	2.5				

	CONN. LOAD (KVA)	ADJUST. FACTOR	DEMAND FACTOR	DEMAND LOAD (KVA)
LIGHTING (L)	18.5	1.25	1.00	23.1
RECEPTACLES (R)	1.8	---	NEC	1.8
LARGEST MOTOR (M)	0.0	1.25	1.00	0.0
ALL OTHER MOTORS (M)	0.0	1.00	1.00	0.0
HEATING (H)	0.0	1.00	1.00	0.0
COOLING (C)	0.0	1.00	1.00	0.0
OTHER (O)	14.2	0.75	1.00	10.6
ELEVATOR (V)	0.0	1.00	1.00	0.0
SPARES (S)	0.0	1.00	1.00	0.0

TOTAL CONNECTED LOAD: 34.5 KVA
TOTAL DEMAND LOAD: 35.5 KVA
DEMAND AMPS: 148.1 AMPS

NOTICE: THE OFFICIAL RECORD OF THIS SHEET IS THE ELECTRONIC FILE SIGNED AND SEALED UNDER RULE 61G15-23.003, F.A.C.

L:\2007-Jobs\107029.01-Central Florida Commuter Rail\CAD-MEP\Sheets E00.708.dwg 5/11/2015 12:46:54 PM chuck.file

REVISIONS

DATE	BY	DESCRIPTION	DATE	BY	DESCRIPTION

TLC Engineering for Architecture
255 S. Orange Avenue, Suite 1600
Orlando, FL. 32801
T 407.841-9050 F 407.425-7367
Certificate of Authorization No. 15
www.tlc-engineers.com
Victor M Diaz PE NO. 55919

STATE OF FLORIDA
DEPARTMENT OF TRANSPORTATION

ROAD NO.	COUNTY	FINANCIAL PROJECT ID
CFRC P2S	OSCEOLA	423446-9-52-01

CENTRAL FLORIDA COMMUTER RAIL TRANSIT (CFCRT) PHASE 2 SOUTH

ELECTRICAL PANEL SCHEDULES

SHEET NO.
206

L:\2007-Jobs\107029.01-Central Florida Commuter Rail\CAD-MEP\Sheets E00.709.dwg 5/11/2015 12:47:11 PM chuck.file

Name: OSCEOLA PKWY
(SECT. 2)

MAIN BREAKER:	-	AMPS	2	POLE	1	PHASE	Project Name: CFCRT
MAIN LUGS:	225	AMPS			3	WIRE	Project Number: 107029
K.A.I.C. :	22,000	AMPS				208Y/120V	Fed From: UTILITY XFMR
SURFACE MTD:	X					480Y/277V	
FLUSH MTD:					X	240/120V	PROVIDE FEED THRU LUGS

NOTES	CKT NO	IDENTIFICATION	CODE	LOAD/PHASE (KVA) A	LOAD/PHASE (KVA) B	CIRCUIT BREAKER TRIP	CIRCUIT BREAKER POLES	CIRCUIT BREAKER POLES	CIRCUIT BREAKER TRIP	LOAD/PHASE (KVA) A	LOAD/PHASE (KVA) B	CODE	IDENTIFICATION	CKT NO	NOTES
	43	SITE LIGHTING	L	0.9		20	2	2	20	0.6		L	SITE LIGHTING	44	
	45	---	L		0.9	--	-	-	--		0.6	L	--	46	
	47	SITE LIGHTING	L	0.6		20	2	2	20	0.7		L	SITE LIGHTING	48	
	49	---	L		0.6	--	-	-	--		0.7	L	--	50	
	51	SITE LIGHTING	L	0.4		20	2	2	20	0.9		L	SITE LIGHTING	52	
	53	---	L		0.4	--	-	-	--		0.9	L	--	54	
	55	SIGN LIGHTING	L	0.5		20	1	1	20	0.0		S	SPARE	56	
	57	FLAG POLE LIGHTING	L		0.5	20	1	1	20		0.0	S	SPARE	58	
	59	SPARE	S	0.0		20	1	1	20	0.4		L	SITE LIGHTING	60	
	61	SPARE	S		0.0	20	1	1	20		0.0	S	SPARE	62	
	63	SPARE	S	0.0		20	1	1	20	0.0		S	SPARE	64	
	65	SPARE	S		0.0	20	1	1	20		0.0	S	SPARE	66	
	67	SPARE	S	0.0		20	1	1	20	0.0		S	SPARE	68	
	69	SPARE	S		0.0	20	1	1	20		0.0	S	SPARE	70	
	71	IRRIGATION CONTROL	O	0.1		20	1	1	20	0.0		S	SPARE	72	
	73	SPARE	S		0.0	20	1	1	20		0.0	S	SPARE	74	
	75	SPARE	S	0.0		20	1	1	20	0.0		S	SPARE	76	
	77	SPARE	S		0.0	20	1	1	20		0.0	S	SPARE	78	
	79	SPARE	S	0.0		20	1	1	20	0.0		S	SPARE	80	
	81	SPARE	S		0.0	20	1	1	20		0.0	S	SPARE	82	
	83	SPARE	S	0.0		20	1	1	20	0.0		S	SPARE	84	
				2.4	2.4					2.6	2.2				

	CONN. LOAD (KVA)	ADJUST. FACTOR	DEMAND FACTOR	DEMAND LOAD (KVA)
LIGHTING (L)	9.6	1.25	1.00	12.1
RECEPTACLES (R)	0.0	---	NEC	0.0
LARGEST MOTOR (M)	0.0	1.25	1.00	0.0
ALL OTHER MOTORS (M)	0.0	1.00	1.00	0.0
HEATING (H)	0.0	1.00	1.00	0.0
COOLING (C)	0.0	1.00	1.00	0.0
OTHER (O)	0.1	0.75	1.00	0.0
ELEVATOR (V)	0.0	1.00	1.00	0.0
SPARES (S)	0.0	1.00	1.00	0.0

TOTAL CONNECTED LOAD:	9.7	KVA
TOTAL DEMAND LOAD:	12.1	KVA
DEMAND AMPS:	50.4	AMPS

NOTICE: THE OFFICIAL RECORD OF THIS SHEET IS THE ELECTRONIC FILE SIGNED AND SEALED UNDER RULE 61G15-23.003, F.A.C.

REVISIONS

DATE	BY	DESCRIPTION	DATE	BY	DESCRIPTION

TLC Engineering for Architecture
255 S. Orange Avenue, Suite 1600
Orlando, FL. 32801
T 407.841-9050 F 407.425-7367
Certificate of Authorization No. 15
www.tlc-engineers.com
Victor M Diaz PE NO. 55919

STATE OF FLORIDA
DEPARTMENT OF TRANSPORTATION

ROAD NO.	COUNTY	FINANCIAL PROJECT ID
CFRC P2S	OSCEOLA	423446-9-52-01

CENTRAL FLORIDA COMMUTER RAIL TRANSIT (CFCRT) PHASE 2 SOUTH

ELECTRICAL PANEL SCHEDULES

SHEET NO. 207

L:\2007-Jobs\107029.01-Central Florida Commuter Rail\CAD-MEP\Sheets E00.710.dwg 5/11/2015 12:47:29 PM chuck.file

DRAWING NO.
E00.710

Name: KISSIMMEE
(SECT. 1)

MAIN BREAKER:	225 AMPS	2 POLE	1 PHASE	Project Name:	CFCRT
MAIN LUGS:	AMPS		3 WIRE	Project Number:	107029
K.A.I.C. :	22,000 AMPS		208Y/120V	Fed From:	UTILITY XFMR
SURFACE MTD:	X		480Y/277V		
FLUSH MTD:			X 240/120V	PROVIDE FEED THRU LUGS	

NOTES	CKT NO	IDENTIFICATION	CODE	LOAD/PHASE (KVA) A	LOAD/PHASE (KVA) B	CIRCUIT BREAKER TRIP	CIRCUIT BREAKER POLES	CIRCUIT BREAKER POLES	CIRCUIT BREAKER TRIP	LOAD/PHASE (KVA) A	LOAD/PHASE (KVA) B	CODE	IDENTIFICATION	CKT NO	NOTES
	1	SPARE	S	0.0		20	1	1	20	0.0		S	SPARE	2	
	3	SPARE	S		0.0	20	1	1	20		0.0	S	SPARE	4	
	5	CANOPY LINEAR LTG PLATFORM 'A'	L	1.1		20	1	1	20	0.9		R	RECEPTACLES PLATFORM 'A'	6	
	7	SPARE	S		0.0	20	1	1	20		0.9	R	RECEPTACLES PLATFORM 'B'	8	
	9	CANOPY LINEAR LTG PLATFORM 'B'	L	1.1		20	1	1	20	0.0		S	SPARE	10	
	11	CANOPY LINEAR LTG PLATFORM 'B'	L		0.2	20	1	1	20		0.0	S	SPARE	12	
	13	CANOPY LINEAR LTG PLATFORM 'A'	L	0.2		20	1	1	20	0.0		S	SPARE	14	
	15	SPARE	S		0.0	20	1	1	20		0.0	S	SPARE	16	
	17	SPARE	S	0.0		20	1	1	20	0.0		S	SPARE	18	
	19	SPARE	S		0.0	20	1	1	20		0.0	S	SPARE	20	
	21	SPARE	S	0.0		20	1	1	20	0.0		S	SPARE	22	
	23	SPARE	S		0.0	20	1	1	20		0.0	S	SPARE	24	
	25	SIGN LIGHTING	L	0.5		20	1	1	20	0.0		S	SPARE	26	
	27	SITE LIGHTING	L		0.2	20	1	1	20		0.0	S	SPARE	28	
	29	SITE LIGHTING	L	0.3		20	1	1	20	0.0		S	SPARE	30	
	31	SITE LIGHTING	L		0.3	20	1	1	20		0.0	S	SPARE	32	
	33	SITE LIGHTING	L	0.3		20	1	2	20	0.3		L	SITE LIGHTING	34	
	35	SPARE	S		0.0	20	1	-	--		0.3	L	--	36	
	37	SPARE	S	0.0		20	1	1	20	0.1		O	TIMECLOCK	38	
	39	COMM 'A'	O		7.0	100	2	2	30			O	SPD	40	
	41	---	O	7.0		--	-	-	--			O	---	42	
				10.5	7.7					1.3	1.2				

	CONN. LOAD (KVA)	ADJUST. FACTOR	DEMAND FACTOR	DEMAND LOAD (KVA)
LIGHTING (L)	5.5	1.25	1.00	6.9
RECEPTACLES (R)	1.8	---	NEC	1.8
LARGEST MOTOR (M)	0.0	1.25	1.00	0.0
ALL OTHER MOTORS (M)	0.0	1.00	1.00	0.0
HEATING (H)	0.0	1.00	1.00	0.0
COOLING (C)	0.0	1.00	1.00	0.0
OTHER (O)	14.2	0.75	1.00	10.6
ELEVATOR (V)	0.0	1.00	1.00	0.0
SPARES (S)	0.0	1.00	1.00	0.0

TOTAL CONNECTED LOAD:	21.5	KVA
TOTAL DEMAND LOAD:	19.3	KVA
DEMAND AMPS:	80.6	AMPS

NOTICE: THE OFFICIAL RECORD OF THIS SHEET IS THE ELECTRONIC FILE SIGNED AND SEALED UNDER RULE 61G15-23.003, F.A.C.

REVISIONS

DATE	BY	DESCRIPTION	DATE	BY	DESCRIPTION

TLC Engineering for Architecture
255 S. Orange Avenue, Suite 1600
Orlando, FL. 32801
T 407.841-9050 F 407.425-7367
Certificate of Authorization No. 15
www.tlc-engineers.com
Victor M Diez PE NO. 55919

STATE OF FLORIDA
DEPARTMENT OF TRANSPORTATION

ROAD NO.	COUNTY	FINANCIAL PROJECT ID
CFRC P2S	OSCEOLA	423446-9-52-01

CENTRAL FLORIDA COMMUTER RAIL TRANSIT (CFCRT) PHASE 2 SOUTH

ELECTRICAL PANEL SCHEDULES

SHEET NO.
208

DRAWING NO.
E00.711

Name: KISSIMMEE
(SECT. 2)

MAIN BREAKER:	-	AMPS	2	POLE	1	PHASE	Project Name: CFCRT
MAIN LUGS:	225	AMPS			3	WIRE	Project Number: 107029
K.A.I.C. :	22,000	AMPS				208Y/120V	Fed From: UTILITY XFMR
SURFACE MTD:	X					480Y/277V	
FLUSH MTD:					X	240/120V	PROVIDE FEED THRU LUGS

NOTES	CKT NO	IDENTIFICATION	CODE	LOAD/PHASE (KVA) A	LOAD/PHASE (KVA) B	CIRCUIT BREAKER TRIP	CIRCUIT BREAKER POLES	CIRCUIT BREAKER POLES	CIRCUIT BREAKER TRIP	LOAD/PHASE (KVA) A	LOAD/PHASE (KVA) B	CODE	IDENTIFICATION	CKT NO	NOTES
	43	SPARE	S	0.0		20	1	2	20	0.2		L	SITE LIGHTING	44	
	45	SPARE	S		0.0	20	1	-	--		0.2	L	--	46	
	47	SPARE	S	0.0		20	1	1	20	0.0		S	SPARE	48	
	49	SPARE	S		0.0	20	1	1	20		0.0	S	SPARE	50	
	51	SPARE	S	0.0		20	1	1	20	0.0		S	SPARE	52	
	53	SPARE	S		0.0	20	1	1	20		0.0	S	SPARE	54	
	55	SPARE	S	0.0		20	1	1	20	0.0		S	SPARE	56	
	57	SPARE	S		0.0	20	1	1	20		0.0	S	SPARE	58	
	59	SPARE	S	0.0		20	1	1	20	0.4		L	SITE LIGHTING	60	
	61	SPARE	S		0.0	20	1	1	20		0.0	S	SPARE	62	
	63	SPARE	S	0.0		20	1	1	20	0.0		S	SPARE	64	
	65	SPARE	S		0.0	20	1	1	20		0.0	S	SPARE	66	
	67	SPARE	S	0.0		20	1	1	20	0.0		S	SPARE	68	
	69	SPARE	S		0.0	20	1	1	20		0.0	S	SPARE	70	
	71	IRRIGATION CONTROL	O	0.1		20	1	1	20	0.0		S	SPARE	72	
	73	SPARE	S		0.0	20	1	1	20		0.0	S	SPARE	74	
	75	SPARE	S	0.0		20	1	1	20	0.0		S	SPARE	76	
	77	SPARE	S		0.0	20	1	1	20		0.0	S	SPARE	78	
	79	SPARE	S	0.0		20	1	1	20	0.0		S	SPARE	80	
	81	SPARE	S		0.0	20	1	1	20		0.0	S	SPARE	82	
	83	SPARE	S	0.0		20	1	1	20	0.0		S	SPARE	84	
				0.1	0.0					0.6	0.2				

	CONN. LOAD (KVA)	ADJUST. FACTOR	DEMAND FACTOR	DEMAND LOAD (KVA)
LIGHTING (L)	0.8	1.25	1.00	1.0
RECEPTACLES (R)	0.0	---	NEC	0.0
LARGEST MOTOR (M)	0.0	1.25	1.00	0.0
ALL OTHER MOTORS (M)	0.0	1.00	1.00	0.0
HEATING (H)	0.0	1.00	1.00	0.0
COOLING (C)	0.0	1.00	1.00	0.0
OTHER (O)	0.1	0.75	1.00	0.0
ELEVATOR (V)	0.0	1.00	1.00	0.0
SPARES (S)	0.0	1.00	1.00	0.0

TOTAL CONNECTED LOAD:	0.8	KVA
TOTAL DEMAND LOAD:	1.0	KVA
DEMAND AMPS:	4.2	AMPS

REVISIONS					
DATE	BY	DESCRIPTION	DATE	BY	DESCRIPTION

TLC Engineering for Architecture
255 S. Orange Avenue, Suite 1600
Orlando, FL. 32801
T 407.841-9050 F 407.425-7367
Certificate of Authorization No. 15
www.tlc-engineers.com
Victor M Diaz PE NO. 55919

STATE OF FLORIDA
DEPARTMENT OF TRANSPORTATION

ROAD NO.	COUNTY	FINANCIAL PROJECT ID
CFRC P2S	OSCEOLA	423446-9-52-01

CENTRAL FLORIDA COMMUTER RAIL TRANSIT (CFCRT) PHASE 2 SOUTH

ELECTRICAL PANEL SCHEDULES

SHEET NO. 209

NOTICE: THE OFFICIAL RECORD OF THIS SHEET IS THE ELECTRONIC FILE SIGNED AND SEALED UNDER RULE 61G15-23.003, F.A.C.

L:\2007-Jobs\107029.01-Central Florida Commuter Rail\CAD-MEP\Sheets E00.711.dwg 5/11/2015 12:47:47 PM chuck.file

DRAWING NO.
E00.712

Name: POINCIANA
(SECT. 1)

MAIN BREAKER:	225	AMPS	2	POLE	1	PHASE	Project Name: CFCRT
MAIN LUGS:		AMPS			3	WIRE	Project Number: 107029
K.A.I.C. :	22,000	AMPS				208Y/120V	Fed From: UTILITY XFMR
SURFACE MTD:	X					480Y/277V	
FLUSH MTD:					X	240/120V	PROVIDE FEED THRU LUGS

NOTES	CKT NO	IDENTIFICATION	CODE	LOAD/PHASE (KVA) A	LOAD/PHASE (KVA) B	CIRCUIT BREAKER TRIP	CIRCUIT BREAKER POLES	CIRCUIT BREAKER POLES	CIRCUIT BREAKER TRIP	LOAD/PHASE (KVA) A	LOAD/PHASE (KVA) B	CODE	IDENTIFICATION	CKT NO	NOTES
	1	SPARE	S	0.0		20	1	1	20	0.0		S	SPARE	2	
	3	SPARE	S		0.0	20	1	1	20		0.0	S	SPARE	4	
	5	CANOPY LINEAR LTG PLATFORM 'A'	L	0.2		20	1	1	20	0.9		R	RECEPTACLES PLATFORM 'A'	6	
	7	CANOPY LINEAR LTG PLATFORM 'A'	L		0.7	20	1	1	20		0.9	R	RECEPTACLES PLATFORM 'B'	8	
	9	CANOPY LINEAR LTG PLATFORM 'B'	L	0.2		20	1	1	20	0.3		L	CANOPY LIGHTING PLATFORM 'B'	10	
	11	CANOPY LINEAR LTG PLATFORM 'B'	L		0.7	20	1	1	20		0.1	L	CANOPY UPLIGHTING PLATFORM 'B'	12	
	13	CANOPY LINEAR LTG PLATFORM 'A'	L	0.3		20	1	1	20	0.1		L	CANOPY UPLIGHTING PLATFORM 'B'	14	
	15	CANOPY UPLTG PLATFORM 'A'	L		0.1	20	1	1	20		0.1	L	CANOPY UPLIGHTING PLATFORM 'B'	16	
	17	CANOPY UPLTG PLATFORM 'A'	L	0.1		20	1	1	20	0.1		L	CANOPY UPLIGHTING PLATFORM 'B'	18	
	19	CANOPY UPLTG PLATFORM 'A'	L		0.1	20	1	1	20		0.0	S	SPARE	20	
	21	CANOPY UPLTG PLATFORM 'A'	L	0.1		20	1	2	20	0.6		L	SITE LIGHTING	22	
	23	SPARE	S		0.0	20	1	-	-		0.6	L	--	24	
	25	SITE LIGHTING	L	0.2		20	1	2	20	0.6		L	SITE LIGHTING	26	
	27	SITE LIGHTING	L		0.3	20	1	-	-		0.6	L	--	28	
	29	SITE LIGHTING	L	0.3		20	1	2	20	0.7		L	SITE LIGHTING	30	
	31	SITE LIGHTING	L		0.1	20	1	-	--		0.7	L	--	32	
	33	SITE LIGHTING	L	0.3		20	1	2	20	0.6		L	SITE LIGHTING	34	
	35	SITE LIGHTING	L		0.3	20	2	-	--		0.6	L	--	36	
	37	SITE LIGHTING	L	0.3		--	-	1	20	0.1		O	TIMECLOCK	38	
	39	COMM 'A'	O		7.0	100	2	2	30			O	SPD	40	
	41	---	O	7.0		--	-	-	--			O	---	42	
				8.8	9.2					3.8	3.4				

	CONN. LOAD (KVA)	ADJUST. FACTOR	DEMAND FACTOR	DEMAND LOAD (KVA)
LIGHTING (L)	19.9	1.25	1.00	24.8
RECEPTACLES (R)	1.8	---	NEC	1.8
LARGEST MOTOR (M)	0.0	1.25	1.00	0.0
ALL OTHER MOTORS (M)	0.0	1.00	1.00	0.0
HEATING (H)	0.0	1.00	1.00	0.0
COOLING (C)	0.0	1.00	1.00	0.0
OTHER (O)	14.2	0.75	1.00	10.6
ELEVATOR (V)	0.0	1.00	1.00	0.0
SPARES (S)	0.0	1.00	1.00	0.0

TOTAL CONNECTED LOAD: 35.8 KVA
TOTAL DEMAND LOAD: 37.2 KVA
DEMAND AMPS: 155.2 AMPS

NOTES:

NOTICE: THE OFFICIAL RECORD OF THIS SHEET IS THE ELECTRONIC FILE SIGNED AND SEALED UNDER RULE 61G15-23.003, F.A.C.

L:\2007-Jobs\107029.01-Central Florida Commuter Rail\CAD-MEP\Sheets E00.712.dwg 5/11/2015 12:48:04 PM chuck.file

REVISIONS

DATE	BY	DESCRIPTION	DATE	BY	DESCRIPTION

TLC Engineering for Architecture
255 S. Orange Avenue, Suite 1600
Orlando, FL. 32801
T 407.841-9050 F 407.425-7367
Certificate of Authorization No. 15
www.tlc-engineers.com
Victor M Diaz PE NO. 55919

STATE OF FLORIDA
DEPARTMENT OF TRANSPORTATION

ROAD NO.	COUNTY	FINANCIAL PROJECT ID
CFRC P2S	OSCEOLA	423446-9-52-01

CENTRAL FLORIDA COMMUTER RAIL TRANSIT (CFCRT) PHASE 2 SOUTH

ELECTRICAL PANEL SCHEDULES

SHEET NO. 210

DRAWING NO.
E00.713

Name: POINCIANA (SECT. 2)

MAIN BREAKER: - AMPS | 2 POLE | 1 PHASE
MAIN LUGS: 225 AMPS | 3 WIRE
K.A.I.C. : 22,000 AMPS | 208Y/120V
SURFACE MTD: X | 480Y/277V
FLUSH MTD: | X 240/120V

Project Name: CFCRT
Project Number: 107029
Fed From: UTILITY XFMR

PROVIDE FEED THRU LUGS

NOTES	CKT NO	IDENTIFICATION	CODE	LOAD/PHASE (KVA) A	LOAD/PHASE (KVA) B	CIRCUIT BREAKER TRIP	CIRCUIT BREAKER POLES	CIRCUIT BREAKER POLES	CIRCUIT BREAKER TRIP	LOAD/PHASE (KVA) A	LOAD/PHASE (KVA) B	CODE	IDENTIFICATION	CKT NO	NOTES
	43	SITE LIGHTING	L	0.6		20	2	2	20	0.6		L	SITE LIGHTING	44	
	45	---	L		0.6	--	-	--	--		0.6	L	--	46	
	47	SITE LIGHTING	L	0.4		20	2	2	20	0.6		L	SITE LIGHTING	48	
	49	---	L		0.4	--	-	--	--		0.6	L	--	50	
	51	SITE LIGHTING	L	0.4		20	2	2	20	0.6		L	SITE LIGHTING	52	
	53	---	L		0.4	--	-	--	--		0.6	L	--	54	
	55	SITE LIGHTING	L	0.7		20	2	1	20	0.0		S	SPARE	56	
	57	---	L		0.7	--	-	1	20		0.0	S	SPARE	58	
	59	SIGN LIGHTING	L	0.5		20	1	1	20	0.4		L	SITE LIGHTING	60	
	61	SPARE	S		0.0	20	1	1	20		0.0	S	SPARE	62	
	63	SPARE	S	0.0		20	1	2	20	0.6		L	SITE LIGHTING	64	
	65	SPARE	S		0.0	20	1	-	-		0.6	L	--	66	
	67	SPARE	S	0.0		20	1	2	20	0.6		L	SITE LIGHTING	68	
	69	SPARE	S		0.0	20	1	-	-		0.6	L	--	70	
	71	IRRIGATION CONTROL	O	0.1		20	1	1	20	0.0		S	SPARE	72	
	73	SPARE	S		0.0	20	1	1	20		0.0	S	SPARE	74	
	75	SPARE	S	0.0		20	1	1	20	0.0		S	SPARE	76	
	77	SPARE	S		0.0	20	1	1	20		0.0	S	SPARE	78	
	79	SPARE	S	0.0		20	1	1	20	0.0		S	SPARE	80	
	81	SPARE	S		0.0	20	1	1	20		0.0	S	SPARE	82	
	83	SPARE	S	0.0		20	1	1	20	0.0		S	SPARE	84	
				2	20	0.6		L	SITE LIGHT	3.2	2.8				
				-	-		0.6	L	--						
				2	20	0.6		L	SITE LIGHTING						
				-	-		0.6	L	--						

LIGHTING (L)	10.5	1.25	1.00	13.1
RECEPTACLES (R)	0.0	---	NEC	0.0
LARGEST MOTOR (M)	0.0	1.25	1.00	0.0
ALL OTHER MOTORS (M)	0.0	1.00	1.00	0.0
HEATING (H)	0.0	1.00	1.00	0.0
COOLING (C)	0.0	1.00	1.00	0.0
OTHER (O)	0.1	0.75	1.00	0.0
ELEVATOR (V)	0.0	1.00	1.00	0.0
SPARES (S)	0.0	1.00	1.00	0.0

TOTAL CONNECTED LOAD: 10.5 KVA
TOTAL DEMAND LOAD: 13.1 KVA
DEMAND AMPS: 54.8 AMPS

NOTES:

REVISIONS					
DATE	BY	DESCRIPTION	DATE	BY	DESCRIPTION

TLC Engineering for Architecture
255 S. Orange Avenue, Suite 1600
Orlando, FL. 32801
T 407.841-9050 F 407.425-7367
Certificate of Authorization No. 15
www.tlc-engineers.com
Victor M Diez PE NO. 55919

STATE OF FLORIDA
DEPARTMENT OF TRANSPORTATION

ROAD NO.	COUNTY	FINANCIAL PROJECT ID
CFRC P2S	OSCEOLA	423446-9-52-01

CENTRAL FLORIDA COMMUTER RAIL TRANSIT (CFCRT) PHASE 2 SOUTH

ELECTRICAL PANEL SCHEDULES

SHEET NO. 211

NOTICE: THE OFFICIAL RECORD OF THIS SHEET IS THE ELECTRONIC FILE SIGNED AND SEALED UNDER RULE 61G15-23.003, F.A.C.

L:\2007-Jobs\107029.01-Central Florida Commuter Rail\CAD-MEP\Sheets E00.713.dwg 5/11/2015 12:48:21 PM chuck.file

L:\2007-Jobs\107029.01-Central Florida Commuter Rail\CAD-MEP\Sheets E00.719.dwg 5/12/2015 2:28:52 PM samuel.leo

Name: COMM-A

(TYP ALL STATIONS)

MAIN BREAKER:	100	AMPS	2	POLE	1	PHASE	Project Name: CFCRT
MAIN LUGS:		AMPS			3	WIRE	Project Number: 107029
K.A.I.C. :	10,000	AMPS				208Y/120V	Fed From: STATION PNL
SURFACE MTD:	X					480Y/277V	
FLUSH MTD:					X	240/120V	

NOTES	CKT NO	IDENTIFICATION	CODE	LOAD/PHASE (KVA) A	LOAD/PHASE (KVA) B	CIRCUIT BREAKER TRIP	CIRCUIT BREAKER POLES	CIRCUIT BREAKER POLES	CIRCUIT BREAKER TRIP	LOAD/PHASE (KVA) A	LOAD/PHASE (KVA) B	CODE	IDENTIFICATION	CKT NO	NOTES
	1	AC UNIT COMM CABINET	C	1.3		20	2	2	30	1.1		--	PANEL COMM-B VIA UPS 240V, 3KVA	2	
	3	--	C		1.3	--	--	--	--		1.4	--	--	4	
	5	PANEL COMM-E	--	1.3		20	2	1	20	0.2		R	QUAD RECEPTACLE	6	
	7	--	--		1.2	--	--	1	20		0.0	S	SPARE	8	
	9	PANEL COMM-F	--	1.3		20	2	1	20	0.0		S	SPARE	10	
	11	--	--		1.2	--	--	1	--		0.0	S	SPACE	12	
				3.9	3.6					1.3	1.4				

	CONN. LOAD (KVA)	ADJUST. FACTOR	DEMAND FACTOR	DEMAND LOAD (KVA)
LIGHTING (L)	0.0	1.25	1.00	0.0
RECEPTACLES (R)	5.0	---	NEC	5.0
LARGEST MOTOR (M)	0.0	1.25	1.00	0.0
ALL OTHER MOTORS (M)	0.0	1.00	1.00	0.0
HEATING (H)	0.0	1.00	1.00	0.0
COOLING (C)	5.1	1.00	1.00	5.1
OTHER (O)	0.0	0.75	1.00	0.0
SPARES (S)	0.0	1.00	1.00	0.0

TOTAL CONNECTED LOAD: 10.1 KVA
TOTAL DEMAND LOAD: 10.1 KVA
DEMAND AMPS: 42.2 AMPS

NOTES:
REFER TO COMMUNICATION EQUIPMENT WIRING SCHEMATIC FOR CIRCUITS INTERNAL TO THE CEC, SHEETS M20.701 AND M20.702

NOTICE: THE OFFICIAL RECORD OF THIS SHEET IS THE ELECTRONIC FILE SIGNED AND SEALED UNDER RULE 61G15-23.003, F.A.C.

REVISIONS

DATE	BY	DESCRIPTION	DATE	BY	DESCRIPTION

TLC Engineering for Architecture
255 S. Orange Avenue, Suite 1600
Orlando, FL. 32801
T 407.841-9050 F 407.425-7367
Certificate of Authorization No. 15
www.tlc-engineers.com
Victor M Diaz PE NO. 55919

STATE OF FLORIDA
DEPARTMENT OF TRANSPORTATION

ROAD NO.	COUNTY	FINANCIAL PROJECT ID
CFRC P2S	VARIOUS	423446-9-52-01

CENTRAL FLORIDA COMMUTER RAIL TRANSIT (CFCRT) PHASE 2 SOUTH

ELECTRICAL PANEL SCHEDULES

SHEET NO. 216

L:\2007-Jobs\107029.01-Central Florida Commuter Rail\CAD-MEP\Sheets E00.720.dwg 5/12/2015 2:29:13 PM samuel.leo

Name: COMM-B

(TYP ALL STATIONS)

MAIN BREAKER: 30 AMPS | 2 POLE | 1 PHASE
MAIN LUGS: AMPS | 3 WIRE
K.A.I.C. : 10,000 AMPS | 208Y/120V
SURFACE MTD: X | 480Y/277V
FLUSH MTD: | X 240/120V

Project Name: CFCRT
Project Number: 107029
Fed From: COMM-A

NOTES	CKT NO	IDENTIFICATION	CODE	LOAD/PHASE (KVA) A	LOAD/PHASE (KVA) B	CIRCUIT BREAKER TRIP	CIRCUIT BREAKER POLES	CIRCUIT BREAKER POLES	CIRCUIT BREAKER TRIP	LOAD/PHASE (KVA) A	LOAD/PHASE (KVA) B	CODE	IDENTIFICATION	CKT NO	NOTES
	1	PANEL COMM-C	--	0.4		20	2	1	20	0.2		R	24V DC POWER SUPPLY (MES, RPU)	2	
	3	--	--		0.6	--	--	1	20		0.2	R	POWER STRIP	4	
	5	PANEL COMM-D	--	0.4		20	2	1	20	0.2		R	PA POWER AMPLIFIER	6	
	7	--	--		0.6	--	--	1	--		0.0	S	SPACE	8	
	9	SPACE	S	0.0		--	1	1	--	0.0		S	SPACE	10	
	11	SPACE	S		0.0	--	1	1	--		0.0	S	SPACE	12	
				0.7	1.2					0.4	0.2				

	CONN. LOAD (KVA)	ADJUST. FACTOR	DEMAND FACTOR	DEMAND LOAD (KVA)
LIGHTING (L)	0.0	1.25	1.00	0.0
RECEPTACLES (R)	2.5	---	NEC	2.5
LARGEST MOTOR (M)	0.0	1.25	1.00	0.0
ALL OTHER MOTORS (M)	0.0	1.00	1.00	0.0
HEATING (H)	0.0	1.00	1.00	0.0
COOLING (C)	0.0	1.00	1.00	0.0
OTHER (O)	0.0	0.75	1.00	0.0
SPARES (S)	0.0	1.00	1.00	0.0

TOTAL CONNECTED LOAD: 2.5 KVA
TOTAL DEMAND LOAD: 2.5 KVA
DEMAND AMPS: 10.3 AMPS

NOTES:
REFER TO COMMUNICATION EQUIPMENT WIRING SCHEMATIC FOR CIRCUITS INTERNAL TO THE CEC, SHEETS M20.701 AND M20.702

NOTICE: THE OFFICIAL RECORD OF THIS SHEET IS THE ELECTRONIC FILE SIGNED AND SEALED UNDER RULE 61G15-23.003, F.A.C.

REVISIONS

DATE	BY	DESCRIPTION	DATE	BY	DESCRIPTION

TLC Engineering for Architecture
255 S. Orange Avenue, Suite 1600
Orlando, FL. 32801
T 407.841-9050 F 407.425-7367
Certificate of Authorization No. 15
www.tlc-engineers.com
Victor M Diaz PE NO. 55919

STATE OF FLORIDA
DEPARTMENT OF TRANSPORTATION

ROAD NO.	COUNTY	FINANCIAL PROJECT ID
CFRC P2S	VARIOUS	423446-9-52-01

CENTRAL FLORIDA COMMUTER RAIL TRANSIT (CFCRT) PHASE 2 SOUTH

ELECTRICAL PANEL SCHEDULES

SHEET NO. 217

L:\2007-Jobs\107029.01-Central Florida Commuter Rail\CAD-MEP\Sheets E00.721.dwg 5/12/2015 2:29:33 PM samuel.leo

Name: COMM-C

(TYP ALL STATIONS)

MAIN BREAKER:		AMPS	2	POLE	1	PHASE	Project Name: CFCRT
MAIN LUGS:	30	AMPS			3	WIRE	Project Number: 107029
K.A.I.C. :	10,000	AMPS				208Y/120V	Fed From: COMM-B
SURFACE MTD:	X					480Y/277V	
FLUSH MTD:					X	240/120V	

NOTES	CKT NO	IDENTIFICATION	CODE	LOAD/PHASE (KVA) A	LOAD/PHASE (KVA) B	CIRCUIT BREAKER TRIP	CIRCUIT BREAKER POLES	CIRCUIT BREAKER POLES	CIRCUIT BREAKER TRIP	LOAD/PHASE (KVA) A	LOAD/PHASE (KVA) B	CODE	IDENTIFICATION	CKT NO	NOTES
	1	PAT / ECB	R	0.1		15	1	1	15	0.2		R	QUAD RECEPTACLE	2	
	3	VARIABLE MESSAGE SIGN	R		0.5	15	1	1	15		0.2	R	DIN RAIL POWER SUPPLY	4	
	5	CCTV POWER SUPPLY	R	0.1		15	1	1	15	0.0		S	SPARE	6	
	7	SPARE	S		0.0	15	1	1	15		0.0	S	SPARE	8	
	9	SPARE	S	0.0		15	1	1	15	0.0		S	SPARE	10	
	11	SPACE	S		0.0	--	1	1	--		0.0	S	SPACE	12	
				0.2	0.5					0.2	0.2				

	CONN. LOAD (KVA)	ADJUST. FACTOR	DEMAND FACTOR	DEMAND LOAD (KVA)
LIGHTING (L)	0.0	1.25	1.00	0.0
RECEPTACLES (R)	1.0	---	NEC	1.0
LARGEST MOTOR (M)	0.0	1.25	1.00	0.0
ALL OTHER MOTORS (M)	0.0	1.00	1.00	0.0
HEATING (H)	0.0	1.00	1.00	0.0
COOLING (C)	0.0	1.00	1.00	0.0
OTHER (O)	0.0	0.75	1.00	0.0
SPARES (S)	0.0	1.00	1.00	0.0

TOTAL CONNECTED LOAD: 1.0 KVA
TOTAL DEMAND LOAD: 1.0 KVA
DEMAND AMPS: 4.0 AMPS

NOTES:
REFER TO COMMUNICATION EQUIPMENT WIRING SCHEMATIC FOR CIRCUITS INTERNAL TO THE CCB, SHEETS M20.701 AND M20.702

NOTICE: THE OFFICIAL RECORD OF THIS SHEET IS THE ELECTRONIC FILE SIGNED AND SEALED UNDER RULE 61G15-23.003, F.A.C.

REVISIONS

DATE	BY	DESCRIPTION	DATE	BY	DESCRIPTION

TLC Engineering for Architecture
255 S. Orange Avenue, Suite 1600
Orlando, FL. 32801
T 407.841-9050 F 407.425-7367
Certificate of Authorization No. 15
www.tlc-engineers.com
Victor M Diaz PE NO. 55919

STATE OF FLORIDA
DEPARTMENT OF TRANSPORTATION

ROAD NO.	COUNTY	FINANCIAL PROJECT ID
CFRC P2S	VARIOUS	423446-9-52-01

CENTRAL FLORIDA COMMUTER RAIL TRANSIT (CFCRT) PHASE 2 SOUTH

ELECTRICAL PANEL SCHEDULES

SHEET NO. 218

L:\2007-Jobs\107029.01-Central Florida Commuter Rail\CAD-MEP\Sheets E00.722.dwg 5/12/2015 2:29:53 PM samuel.leo

Name: COMM-D

(TYP ALL STATIONS)

MAIN BREAKER:		AMPS	2	POLE	1	PHASE	Project Name: CFCRT
MAIN LUGS:	30	AMPS			3	WIRE	Project Number: 107029
K.A.I.C. :	10,000	AMPS				208Y/120V	Fed From: COMM-B
SURFACE MTD:	X					480Y/277V	
FLUSH MTD:					X	240/120V	

NOTES	CKT NO	IDENTIFICATION	CODE	LOAD/PHASE (KVA) A	LOAD/PHASE (KVA) B	CIRCUIT BREAKER TRIP	CIRCUIT BREAKER POLES	CIRCUIT BREAKER POLES	CIRCUIT BREAKER TRIP	LOAD/PHASE (KVA) A	LOAD/PHASE (KVA) B	CODE	IDENTIFICATION	CKT NO	NOTES
	1	PAT / ECB	R	0.1		15	1	1	15	0.2		R	QUAD RECEPTACLE	2	
	3	VARIABLE MESSAGE SIGN	R		0.5	15	1	1	15		0.2	R	DIN RAIL POWER SUPPLY	4	
	5	CCTV POWER SUPPLY	R	0.1		15	1	1	15	0.0		R	SPARE	6	
	7	SPARE	S		0.0	15	1	1	15		0.0	S	SPARE	8	
	9	SPARE	S	0.0		15	1	1	15	0.0		S	SPARE	10	
	11	SPACE	S		0.0	--	1	1	--		0.0	S	SPACE	12	
				0.2	0.5					0.2	0.2				

	CONN. LOAD (KVA)	ADJUST. FACTOR	DEMAND FACTOR	DEMAND LOAD (KVA)
LIGHTING (L)	0.0	1.25	1.00	0.0
RECEPTACLES (R)	1.0	---	NEC	1.0
LARGEST MOTOR (M)	0.0	1.25	1.00	0.0
ALL OTHER MOTORS (M)	0.0	1.00	1.00	0.0
HEATING (H)	0.0	1.00	1.00	0.0
COOLING (C)	0.0	1.00	1.00	0.0
OTHER (O)	0.0	0.75	1.00	0.0
SPARES (S)	0.0	1.00	1.00	0.0

TOTAL CONNECTED LOAD: 1.0 KVA
TOTAL DEMAND LOAD: 1.0 KVA
DEMAND AMPS: 4.0 AMPS

NOTES:
REFER TO COMMUNICATION EQUIPMENT WIRING SCHEMATIC FOR CIRCUITS INTERNAL TO THE CCB, SHEETS M20.701 AND M20.702

NOTICE: THE OFFICIAL RECORD OF THIS SHEET IS THE ELECTRONIC FILE SIGNED AND SEALED UNDER RULE 61G15-23.003, F.A.C.

REVISIONS

DATE	BY	DESCRIPTION	DATE	BY	DESCRIPTION

TLC Engineering for Architecture
255 S. Orange Avenue, Suite 1600
Orlando, FL. 32801
T 407.841-9050 F 407.425-7367
Certificate of Authorization No. 15
www.tlc-engineers.com
Victor M Diez PE NO. 55919

STATE OF FLORIDA
DEPARTMENT OF TRANSPORTATION

ROAD NO.	COUNTY	FINANCIAL PROJECT ID
CFRC P2S	VARIOUS	423446-9-52-01

CENTRAL FLORIDA COMMUTER RAIL TRANSIT (CFCRT) PHASE 2 SOUTH

ELECTRICAL PANEL SCHEDULES

SHEET NO. 219

L:\2007-Jobs\107029.01-Central Florida Commuter Rail\CAD-MEP\Sheets E00.723.dwg 5/21/2015 7:32:58 AM chuck.file

Name: COMM-E

(TYP ALL STATIONS)

MAIN BREAKER:		AMPS	2	POLE	1	PHASE	Project Name: CFCRT
MAIN LUGS:	30	AMPS			3	WIRE	Project Number: 107029
K.A.I.C. :	10,000	AMPS				208Y/120V	Fed From: COMM-A
SURFACE MTD:	X					480Y/277V	
FLUSH MTD:					X	240/120V	

NOTES	CKT NO	IDENTIFICATION	CODE	LOAD/PHASE (KVA) A	LOAD/PHASE (KVA) B	CIRCUIT BREAKER TRIP	CIRCUIT BREAKER POLES	CIRCUIT BREAKER POLES	CIRCUIT BREAKER TRIP	LOAD/PHASE (KVA) A	LOAD/PHASE (KVA) B	CODE	IDENTIFICATION	CKT NO	NOTES
	1	AC UNIT COMM CABINET	C	0.7		20	2	1	20	0.2		R	QUAD RECEPTACLE	2	
	3	--	C		0.7	--	--	1	20		0.3	R	TICKET VALIDATOR	4	
	5	SPARE	S	0.0		20	1	1	20	1.0		R	TICKET VENDING MACHINE	6	
	7	SPARE	S		0.0	20	1	1	20		1.0	R	TICKET VENDING MACHINE	8	
	9	SPACE	S	0.0		--	1	1	20	0.3		R	TICKET VALIDATOR	10	
	11	SPACE	S		0.0	--	1	1	20		0.3	R	TICKET VALIDATOR	12	
				0.7	0.7					1.4	1.5				

	CONN. LOAD (KVA)	ADJUST. FACTOR	DEMAND FACTOR	DEMAND LOAD (KVA)
LIGHTING (L)	0.0	1.25	1.00	0.0
RECEPTACLES (R)	2.9	---	NEC	2.9
LARGEST MOTOR (M)	0.0	1.25	1.00	0.0
ALL OTHER MOTORS (M)	0.0	1.00	1.00	0.0
HEATING (H)	0.0	1.00	1.00	0.0
COOLING (C)	1.3	1.00	1.00	1.3
OTHER (O)	0.0	0.75	1.00	0.0
SPARES (S)	0.0	1.00	1.00	0.0

TOTAL CONNECTED LOAD: 4.2 KVA
TOTAL DEMAND LOAD: 4.2 KVA
DEMAND AMPS: 17.3 AMPS

NOTES:
REFER TO COMMUNICATION EQUIPMENT WIRING SCHEMATIC FOR CIRCUITS INTERNAL TO THE CCB, SHEETS M20.701 AND M20.702

REVISIONS					
DATE	BY	DESCRIPTION	DATE	BY	DESCRIPTION

TLC Engineering for Architecture
255 S. Orange Avenue, Suite 1600
Orlando, FL. 32801
T 407.841-9050 F 407.425-7367
Certificate of Authorization No. 15
www.tlc-engineers.com
Victor M Diez PE NO. 55919

STATE OF FLORIDA
DEPARTMENT OF TRANSPORTATION

ROAD NO.	COUNTY	FINANCIAL PROJECT ID
CFRC P2S	VARIOUS	423446-9-52-01

CENTRAL FLORIDA COMMUTER RAIL TRANSIT (CFCRT) PHASE 2 SOUTH

ELECTRICAL PANEL SCHEDULES

SHEET NO. 220

NOTICE: THE OFFICIAL RECORD OF THIS SHEET IS THE ELECTRONIC FILE SIGNED AND SEALED UNDER RULE 61G15-23.003, F.A.C.

L:\2007-Jobs\107029.01-Central Florida Commuter Rail\CAD-MEP\Sheets E00.724.dwg 5/21/2015 7:33:35 AM chuck.file

Name: COMM-F

(TYP ALL STATIONS)

MAIN BREAKER: ____ AMPS | 2 POLE | 1 PHASE
MAIN LUGS: 30 AMPS | 3 WIRE
K.A.I.C. : 10,000 AMPS | 208Y/120V
SURFACE MTD: X | 480Y/277V
FLUSH MTD: ____ | X 240/120V

Project Name: CFCRT
Project Number: 107029
Fed From: COMM-A

NOTES	CKT NO	IDENTIFICATION	CODE	LOAD/PHASE (KVA) A	LOAD/PHASE (KVA) B	CIRCUIT BREAKER TRIP	CIRCUIT BREAKER POLES	CIRCUIT BREAKER POLES	CIRCUIT BREAKER TRIP	LOAD/PHASE (KVA) A	LOAD/PHASE (KVA) B	CODE	IDENTIFICATION	CKT NO	NOTES
	1	AC UNIT COMM CABINET	C	0.7		20	2	1	20	0.2		R	QUAD RECEPTACLE	2	
	3	--	C		0.7	--	--	1	20		0.3	R	TICKET VALIDATOR	4	
	5	SPARE	S	0.0		20	1	1	20	1.0		R	TICKET VENDING MACHINE	6	
	7	SPARE	S		0.0	20	1	1	20		1.0	R	TICKET VENDING MACHINE	8	
	9	SPACE	S	0.0		--	1	1	20	0.3		R	TICKET VALIDATOR	10	
	11	SPACE	S		0.0	--	1	1	20		0.3	R	TICKET VALIDATOR	12	
				0.7	0.7					1.4	1.5				

	CONN. LOAD (KVA)	ADJUST. FACTOR	DEMAND FACTOR	DEMAND LOAD (KVA)
LIGHTING (L)	0.0	1.25	1.00	0.0
RECEPTACLES (R)	2.9	---	NEC	2.9
LARGEST MOTOR (M)	0.0	1.25	1.00	0.0
ALL OTHER MOTORS (M)	0.0	1.00	1.00	0.0
HEATING (H)	0.0	1.00	1.00	0.0
COOLING (C)	1.3	1.00	1.00	1.3
OTHER (O)	0.0	0.75	1.00	0.0
SPARES (S)	0.0	1.00	1.00	0.0

TOTAL CONNECTED LOAD: 4.2 KVA
TOTAL DEMAND LOAD: 4.2 KVA
DEMAND AMPS: 17.6 AMPS

NOTES:
REFER TO COMMUNICATION EQUIPMENT WIRING SCHEMATIC FOR CIRCUITS INTERNAL TO THE CCB, SHEETS M20.701 AND M20.702

NOTICE: THE OFFICIAL RECORD OF THIS SHEET IS THE ELECTRONIC FILE SIGNED AND SEALED UNDER RULE 61G15-23.003, F.A.C.

REVISIONS					
DATE	BY	DESCRIPTION	DATE	BY	DESCRIPTION

TLC Engineering for Architecture
255 S. Orange Avenue, Suite 1600
Orlando, FL. 32801
T 407.841-9050 F 407.425-7367
Certificate of Authorization No. 15
www.tlc-engineers.com
Victor M Diaz PE NO. 55919

STATE OF FLORIDA
DEPARTMENT OF TRANSPORTATION

ROAD NO.	COUNTY	FINANCIAL PROJECT ID
CFRC P2S	VARIOUS	423446-9-52-01

CENTRAL FLORIDA COMMUTER RAIL TRANSIT (CFCRT) PHASE 2 SOUTH

ELECTRICAL PANEL SCHEDULES

SHEET NO. 221

L:\2007-Jobs\107029.01-Central Florida Commuter Rail\CAD-MEP\Sheets E00.718.dwg 5/12/2015 2:28:31 PM samuel.leo

DRAWING NO.
E00.718



LIGHT FIXTURE TYPE 'LD1' — 6
NO SCALE



LIGHT FIXTURE TYPE 'BL1' — 3
NO SCALE



LIGHT FIXTURE TYPE 'HM1' — 8
NO SCALE



LIGHT FIXTURE TYPE 'FP1' — 5
NO SCALE



LIGHT FIXTURE TYPE 'B1' — 2
NO SCALE



LIGHT FIXTURE TYPE 'SA1/SA2' — 7
NO SCALE



LIGHT FIXTURE TYPE 'C' — 4
NO SCALE



LIGHT FIXTURE TYPE 'A4' — 1
NO SCALE

REVISIONS					
DATE	BY	DESCRIPTION	DATE	BY	DESCRIPTION

TLC Engineering for Architecture
255 S. Orange Avenue, Suite 1600
Orlando, FL. 32801
T 407.841-9050 F 407.425-7367
Certificate of Authorization No. 15
www.tlc-engineers.com
Victor M Diez PE NO. 55919

STATE OF FLORIDA
DEPARTMENT OF TRANSPORTATION

ROAD NO.	COUNTY	FINANCIAL PROJECT ID
CFRC P2S	VARIOUS	423446-9-52-01

CENTRAL FLORIDA COMMUTER RAIL TRANSIT (CFCRT) PHASE 2 SOUTH

LIGHT FIXTURES

SHEET NO.
222

NOTICE: THE OFFICIAL RECORD OF THIS SHEET IS THE ELECTRONIC FILE SIGNED AND SEALED UNDER RULE 61G15-23.003, F.A.C.

Scale Comparison Study: 1/4"=1'-0"

Full Color Logo to be provided by FDOT



INDEX

- A Station ID - Pylon
- B Vehicular Wayfinding Directional
- C Vehicular Wayfinding Directional
- E Pedestrian Wayfinding Directional
- F Pedestrian Wayfinding Directional
- I Station ID - Platform
- K Directory/Kiosk
- L Tickets
- M Off Site Directional
- N Mini-High Platform ID
- O Mini-High Conductor Step ID
- P Tap Here
- Q Station ID - Braille

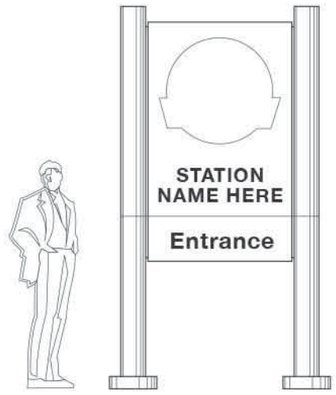

A

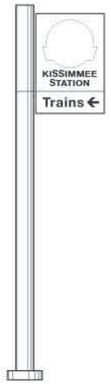

A-2



B



C

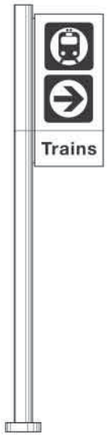

E



F



I

In Landscape

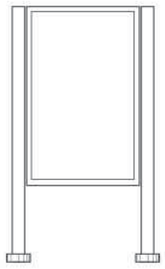

On Platform

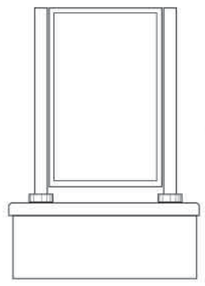

K

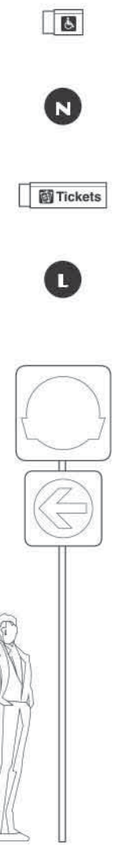

M



P

Environmental Graphics Designed by:

Bockstall Design Associates
680 Mourning Dove Circle
Lake Mary FL 32746
407.810.3442
jim@bockstalldesign.com

REVISIONS					
DATE	BY	DESCRIPTION	DATE	BY	DESCRIPTION

Christina E. Hite, RLA #1340
DIX.HITE + PARTNERS
150 W. JESSUP AVENUE
LONGWOOD, FLORIDA
TEL 407.667.1777
FAX 407.667.1779
Certificate of Authorization No. LC0000358

STATE OF FLORIDA
DEPARTMENT OF TRANSPORTATION

ROAD NO.	COUNTY	FINANCIAL PROJECT ID
CFRC P2S	VARIOUS	423446-9-52-01

CENTRAL FLORIDA COMMUTER RAIL TRANSIT (CFCRT) PHASE 2 SOUTH

GENERAL INFORMATION

SHEET NO. 223

NOTICE: THE OFFICIAL RECORD OF THIS SHEET IS THE ELECTRONIC FILE SIGNED AND SEALED UNDER RULE 61G10-11.011, F.A.C.

DRAWING NO.
W20.700-A

Sign Type A

A

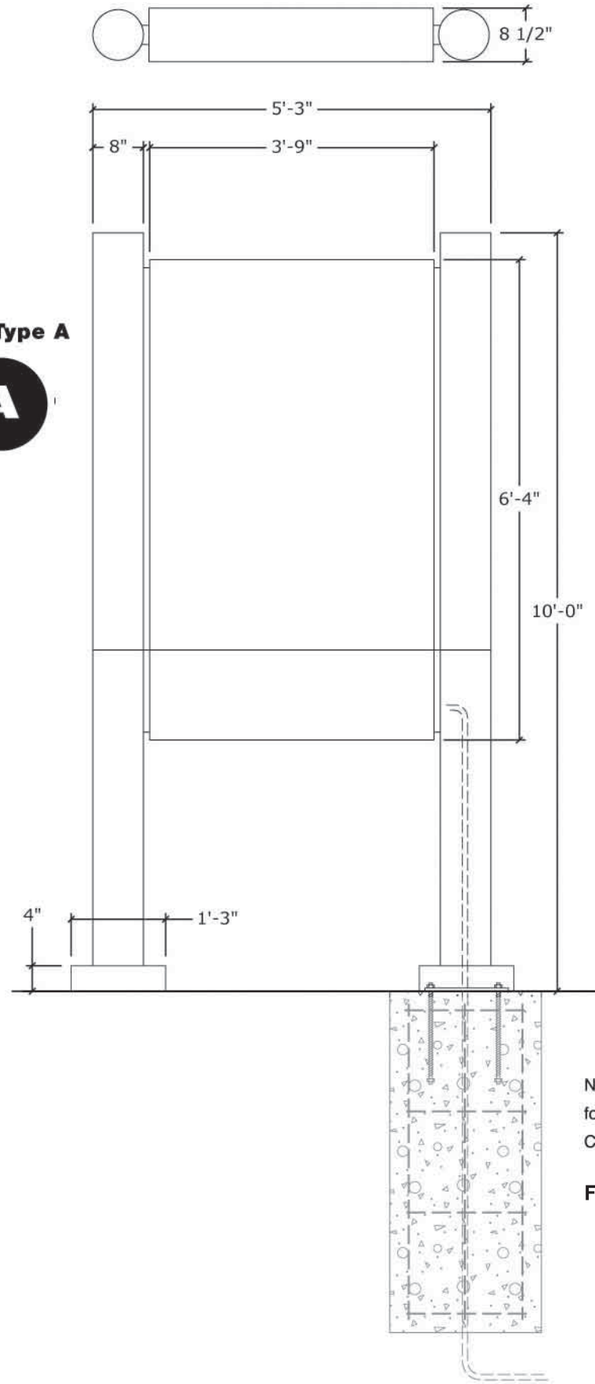

Sign Type A

A-2

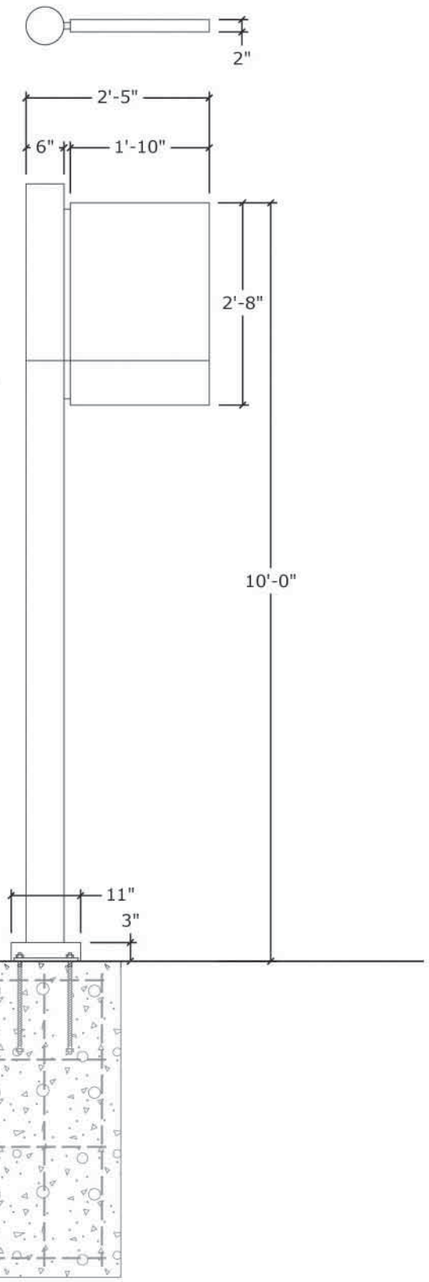

NOTE: See structural drawing S20.707
for steel connection plate and bolts.
Coordinate all sign connections with structural steel details.

Footings are required for all posts

Environmental Graphics Designed by:

Bockstall Design Associates
680 Mourning Dove Circle
Lake Mary FL 32746
407.810.3442
jim@bockstalldesign.com

NOTICE: THE OFFICIAL RECORD OF THIS SHEET IS THE ELECTRONIC FILE SIGNED AND SEALED UNDER RULE 61G10-11.011, F.A.C.

REVISIONS					
DATE	BY	DESCRIPTION	DATE	BY	DESCRIPTION

Christina E. Hite, RLA #1340
DIX.HITE + PARTNERS
150 W. JESSUP AVENUE
LONGWOOD, FLORIDA
TEL 407.667.1777
FAX 407.667.1779
Certificate of Authorization No. LC0000358

STATE OF FLORIDA
DEPARTMENT OF TRANSPORTATION

ROAD NO.	COUNTY	FINANCIAL PROJECT ID
CFRC P2S	VARIOUS	423446-9-52-01

CENTRAL FLORIDA COMMUTER RAIL TRANSIT (CFCRT) PHASE 2 SOUTH

GRAPHICS DETAILS

SHEET NO.
224

Sign Type B

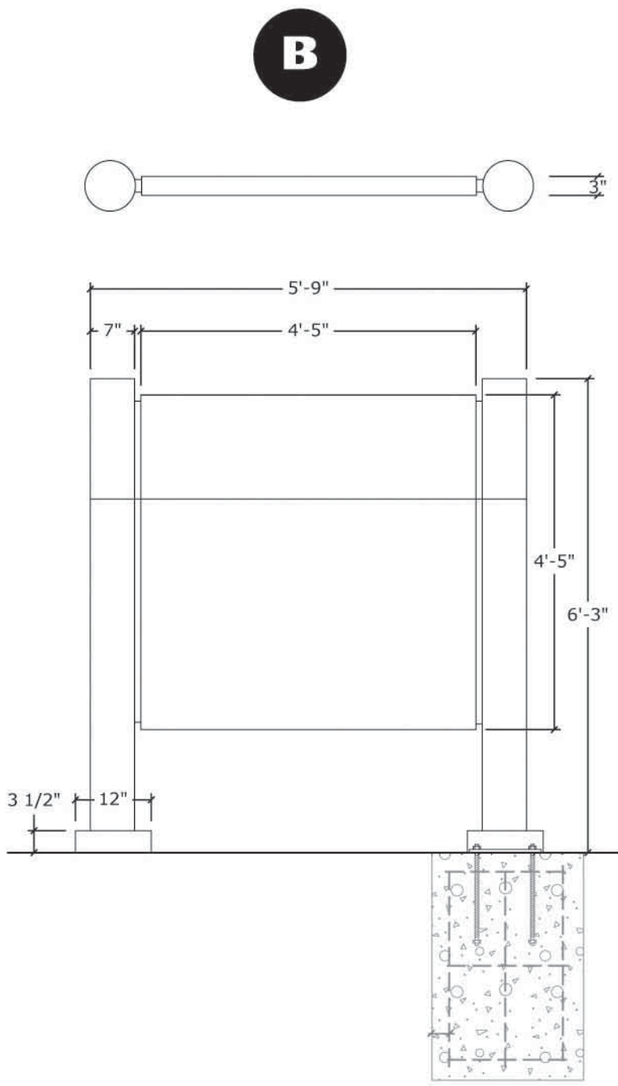

Sign Type C

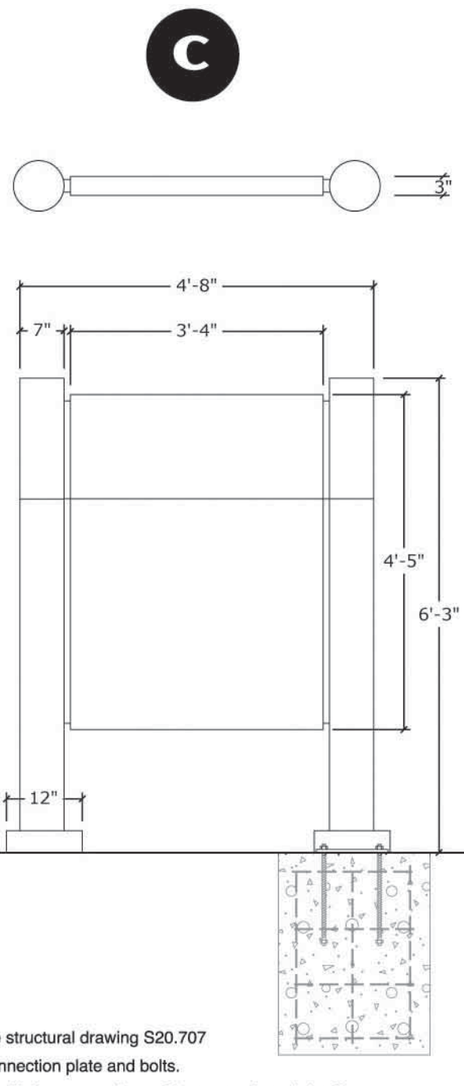

Sign Type E

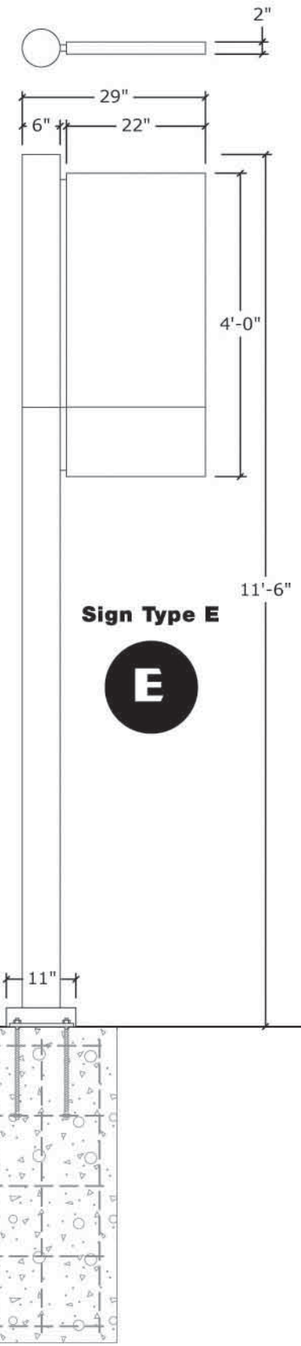

Sign Type F

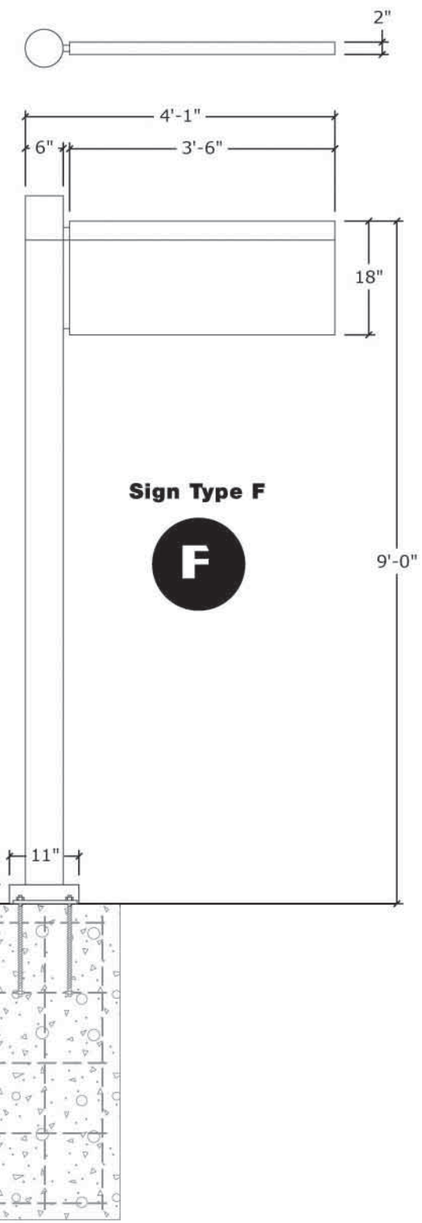

NOTE: See structural drawing S20.707
for steel connection plate and bolts.
Coordinate all sign connections with structural steel details.

Footings are required for all posts

Environmental Graphics Designed by:

Bockstall Design Associates
680 Mourning Dove Circle
Lake Mary FL 32746
407.810.3442
jim@bockstalldesign.com

NOTICE: THE OFFICIAL RECORD OF THIS SHEET IS THE ELECTRONIC FILE SIGNED AND SEALED UNDER RULE 61G10-11.011, F.A.C.

REVISIONS					
DATE	BY	DESCRIPTION	DATE	BY	DESCRIPTION

Christina E. Hite, RLA #1340
DIX.HITE + PARTNERS
150 W. JESSUP AVENUE
LONGWOOD, FLORIDA
TEL 407.667.1777
FAX 407.667.1779
Certificate of Authorization No. LC0000358

STATE OF FLORIDA
DEPARTMENT OF TRANSPORTATION

ROAD NO.	COUNTY	FINANCIAL PROJECT ID
CFRC P2S	VARIOUS	423446-9-52-01

CENTRAL FLORIDA COMMUTER RAIL TRANSIT (CFCRT) PHASE 2 SOUTH

GRAPHICS DETAILS

SHEET NO.
225

DRAWING NO.
W20.701

1 W20.701 Top View Section
Scale: 1 1/2”=1’-0”

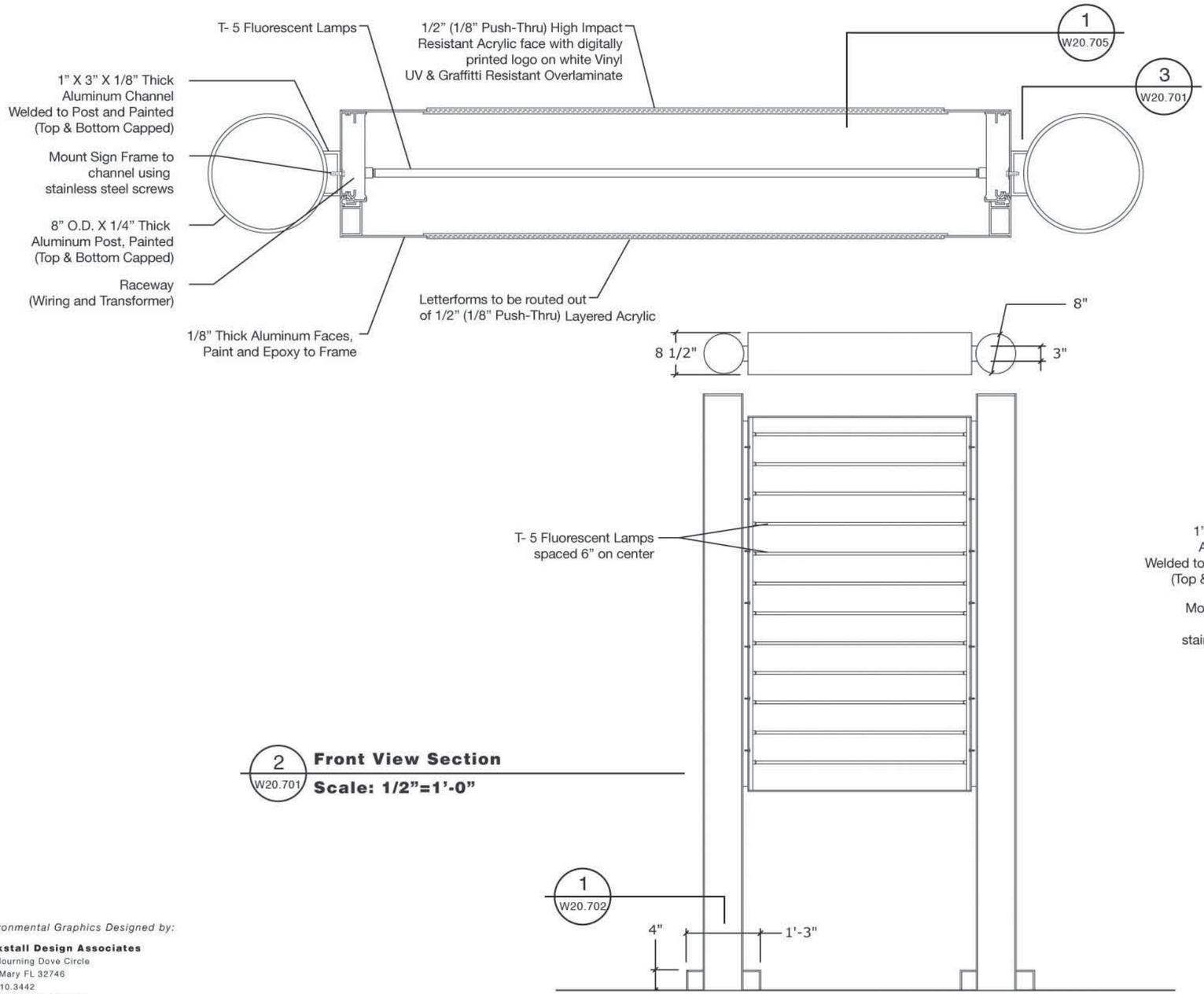

2 W20.701 Front View Section
Scale: 1/2”=1’-0”

Sign Type A

A

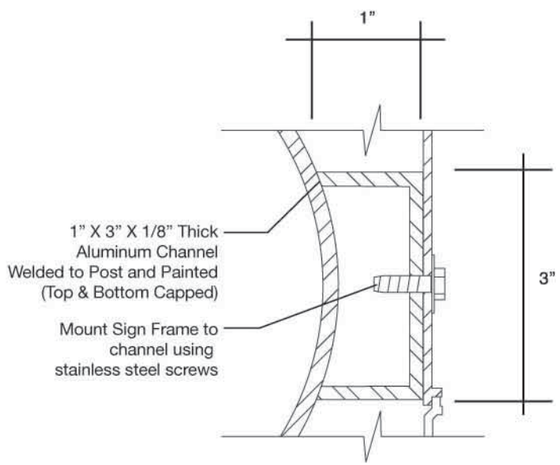

3 W20.701 Top View Section
Scale: 1/2”=1”

Environmental Graphics Designed by:

Bockstall Design Associates
680 Mourning Dove Circle
Lake Mary FL 32746
407.810.3442
jim@bockstalldesign.com

NOTICE: THE OFFICIAL RECORD OF THIS SHEET IS THE ELECTRONIC FILE SIGNED AND SEALED UNDER RULE 61G10-11.011, F.A.C.

REVISIONS					
DATE	BY	DESCRIPTION	DATE	BY	DESCRIPTION

Christina E. Hite, RLA #1340
DIX.HITE + PARTNERS
150 W. JESSUP AVENUE
LONGWOOD, FLORIDA
TEL 407.667.1777
FAX 407.667.1779
Certificate of Authorization No. LC0000358

STATE OF FLORIDA
DEPARTMENT OF TRANSPORTATION

ROAD NO.	COUNTY	FINANCIAL PROJECT ID
CFRC P2S	VARIOUS	423446-9-52-01

CENTRAL FLORIDA COMMUTER RAIL TRANSIT (CFCRT) PHASE 2 SOUTH

GRAPHICS DETAILS

SHEET NO.
226

DRAWING NO.
W20.702

Sign Type A

A

Refer to Sheet S20.707

NOTE: See structural drawing S20.707
for steel connection plate and bolts.
Coordinate all sign connections with structural steel details.

Footings are required for all posts

1 W20.702 Section - Footer Detail
Scale: 1/4"=1"

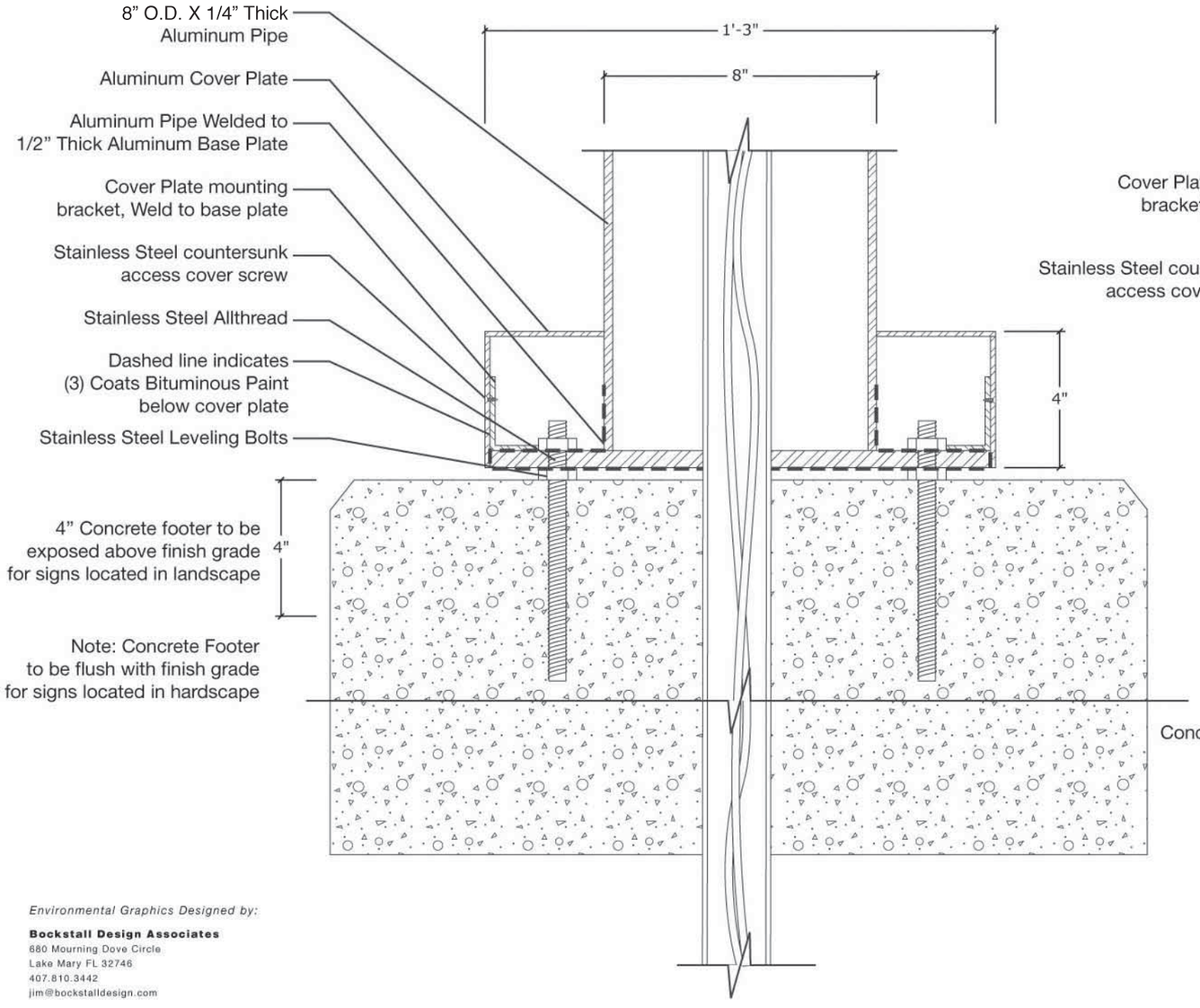

2 W20.702 Top View Section - Footer Detail
Scale: 1/4"=1"

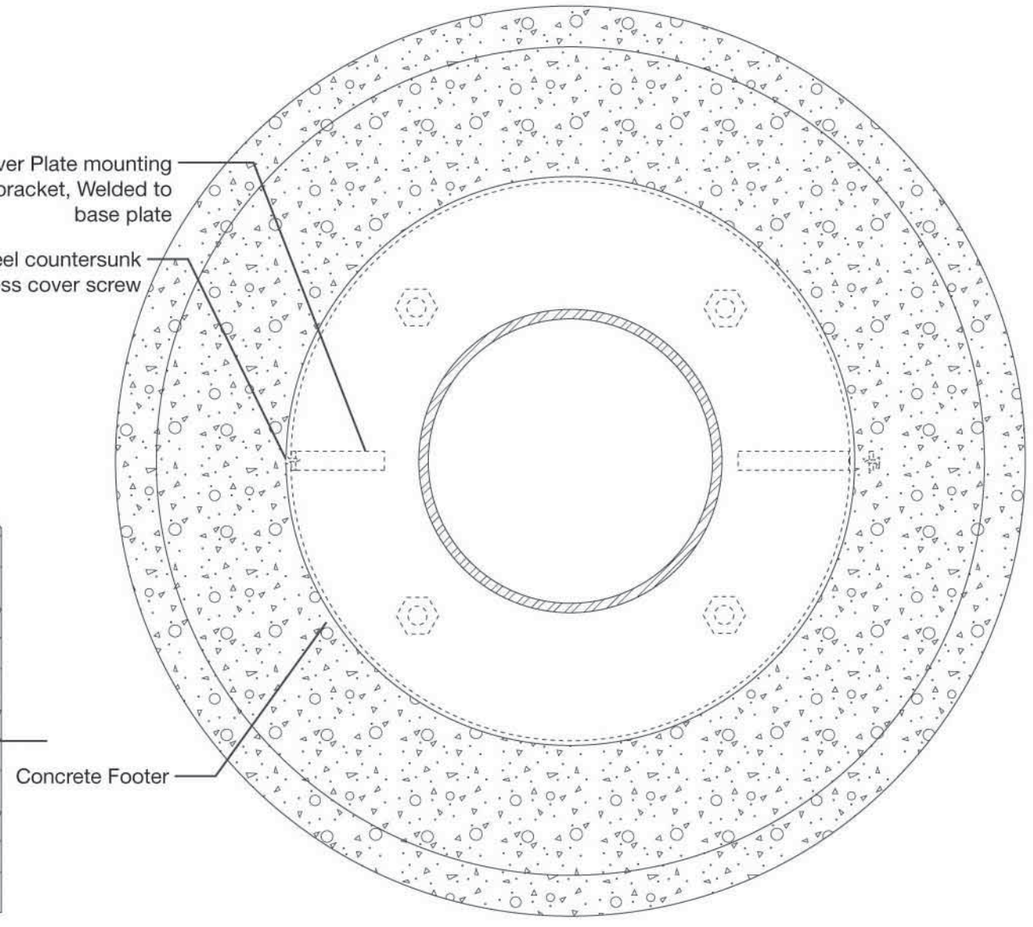

Environmental Graphics Designed by:

Bockstall Design Associates
680 Mourning Dove Circle
Lake Mary FL 32746
407.810.3442
jim@bockstalldesign.com

NOTICE: THE OFFICIAL RECORD OF THIS SHEET IS THE ELECTRONIC FILE SIGNED AND SEALED UNDER RULE 61G10-11.011, F.A.C.

REVISIONS					
DATE	BY	DESCRIPTION	DATE	BY	DESCRIPTION

Christina E. Hite, RLA #1340
DIX.HITE + PARTNERS
150 W. JESSUP AVENUE
LONGWOOD, FLORIDA
TEL 407.667.1777
FAX 407.667.1779
Certificate of Authorization No. LC0000358

STATE OF FLORIDA DEPARTMENT OF TRANSPORTATION		
ROAD NO.	COUNTY	FINANCIAL PROJECT ID
CFRC P2S	VARIOUS	423446-9-52-01

CENTRAL FLORIDA COMMUTER RAIL TRANSIT (CFCRT) PHASE 2 SOUTH

GRAPHICS DETAILS

SHEET NO.
227

DRAWING NO.
W20.705

1 W20.705 Backlit Graphics Detail
Full Size

Sign Type A

A

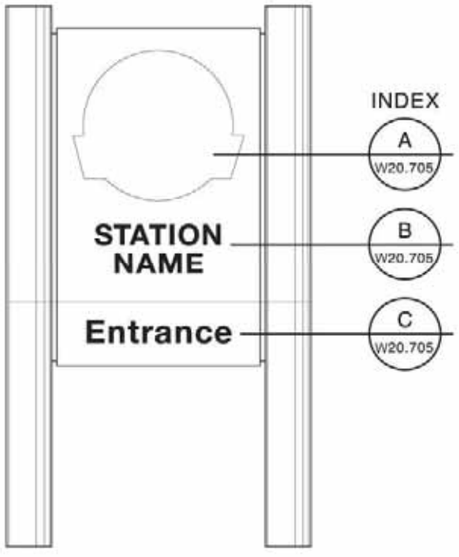

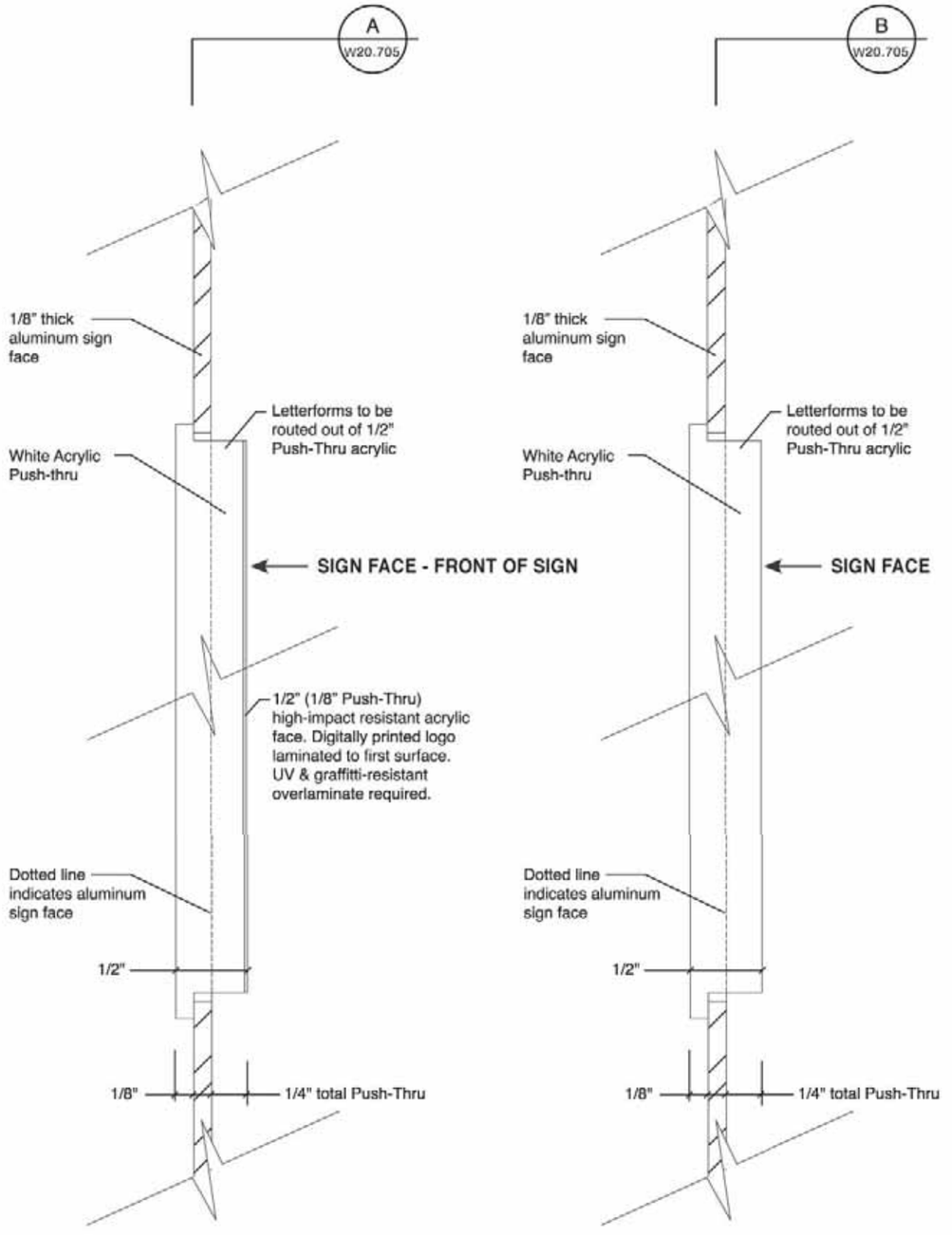

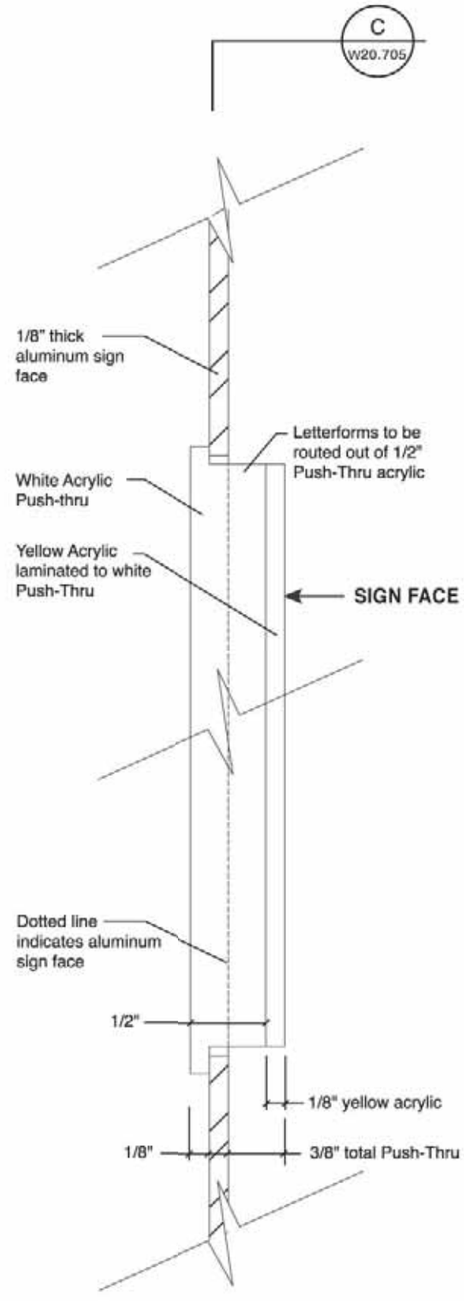

Environmental Graphics Designed by:

Bockstall Design Associates
680 Mourning Dove Circle
Lake Mary FL 32746
407.810.3442
jim@bockstalldesign.com

NOTICE: THE OFFICIAL RECORD OF THIS SHEET IS THE ELECTRONIC FILE SIGNED AND SEALED UNDER RULE 61G10-11.011, F.A.C.

REVISIONS					
DATE	BY	DESCRIPTION	DATE	BY	DESCRIPTION

Christine E. Hite, RLA #1340
DIX.HITE + PARTNERS
150 W. JESSUP AVENUE
LONGWOOD, FLORIDA
TEL 407.647.1777
FAX 407.647.1779
Certificate of Authorization No. LC0000358

STATE OF FLORIDA DEPARTMENT OF TRANSPORTATION		
ROAD NO.	COUNTY	FINANCIAL PROJECT ID
CFRC P2S	VARIOUS	423446-9-52-01

CENTRAL FLORIDA COMMUTER RAIL TRANSIT (CFCRT) PHASE 2 SOUTH

GRAPHICS DETAILS

SHEET NO.
228

DRAWING NO.
W20.708

Sign Type B

B

1/8" Thick Removable Sign Insert
Extruded Aluminum Frame
1" X 2" X 1/8" Thick Aluminum Channel Welded to Post and Painted (Top & Bottom Capped)
6" O.D. X 1/4" Thick Aluminum Post, Painted (Top & Bottom Capped)
Mount Sign Frame to channel using stainless steel screws

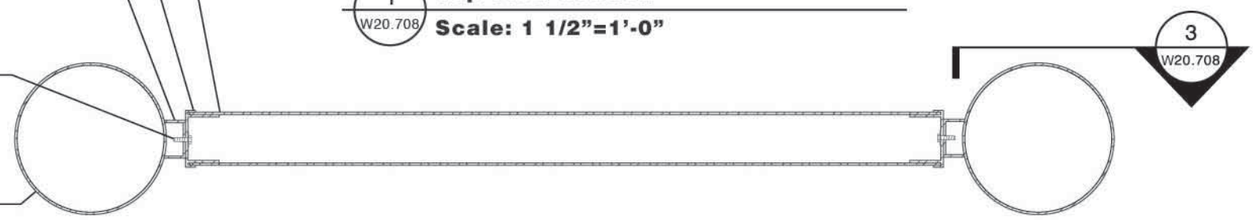

1 W20.708 **Top View Section**
Scale: 1 1/2"=1'-0"

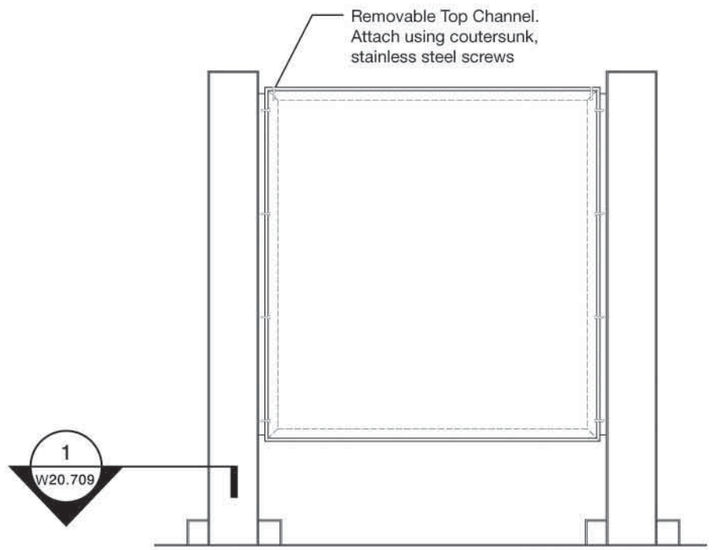

2 W20.708 **Front View Section**
Scale: 1/2"=1'-0"

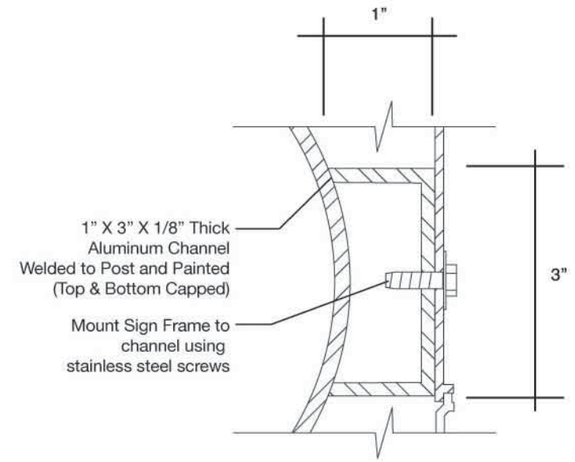

3 W20.708 **Top View Section**
Scale: 1/2"=1"

Environmental Graphics Designed by:

Bockstall Design Associates
680 Mourning Dove Circle
Lake Mary FL 32746
407.810.3442
jim@bockstalldesign.com

REVISIONS					
DATE	BY	DESCRIPTION	DATE	BY	DESCRIPTION

Christina E. Hite, RLA #1340
DIX.HITE + PARTNERS
150 W. JESSUP AVENUE
LONGWOOD, FLORIDA
TEL 407.667.1777
FAX 407.667.1779
Certificate of Authorization No. LC0000358

STATE OF FLORIDA
DEPARTMENT OF TRANSPORTATION

ROAD NO.	COUNTY	FINANCIAL PROJECT ID
CFRC P2S	VARIOUS	423446-9-52-01

CENTRAL FLORIDA COMMUTER RAIL TRANSIT (CFCRT) PHASE 2 SOUTH

GRAPHICS DETAILS

SHEET NO.
229

NOTICE: THE OFFICIAL RECORD OF THIS SHEET IS THE ELECTRONIC FILE SIGNED AND SEALED UNDER RULE 61G10-11.011, F.A.C.

DRAWING NO.
W20.710

Sign Type C

C

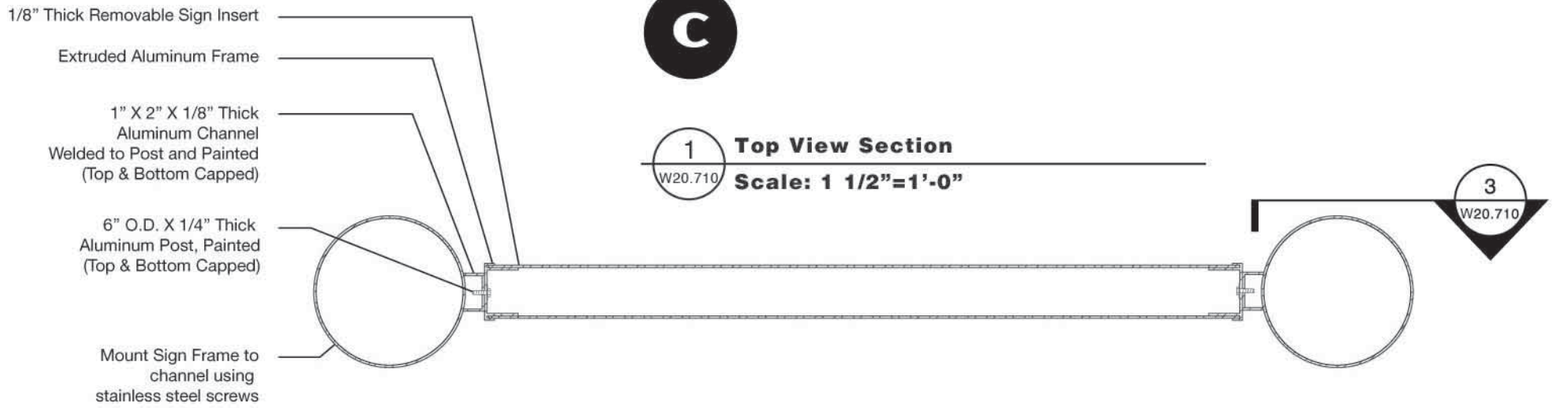

1 W20.710 **Top View Section**
Scale: 1 1/2"=1'-0"

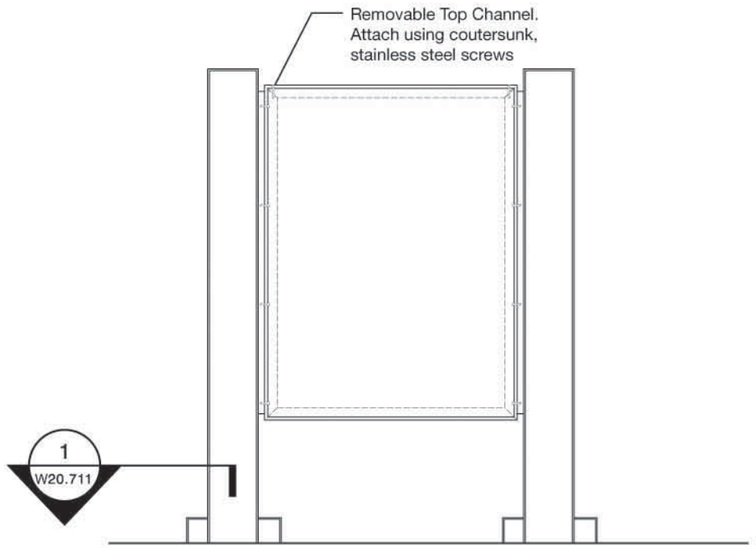

2 W20.710 **Front View Section**
Scale: 1/2"=1'-0"

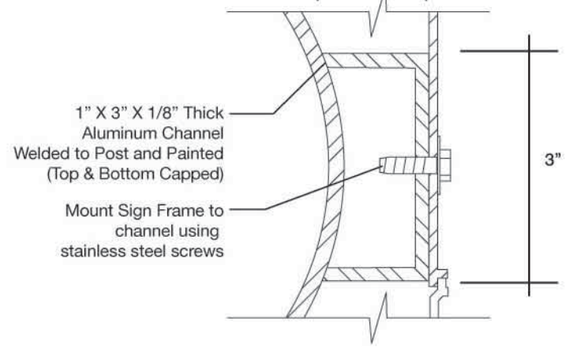

3 W20.710 **Top View Section**
Scale: 1/2"=1"

Environmental Graphics Designed by:

Bockstall Design Associates
680 Mourning Dove Circle
Lake Mary FL 32746
407.810.3442
jim@bockstalldesign.com

REVISIONS					
DATE	BY	DESCRIPTION	DATE	BY	DESCRIPTION

Christina E. Hite, RLA #1340
DIX.HITE + PARTNERS
150 W. JESSUP AVENUE
LONGWOOD, FLORIDA
TEL 407.667.1777
FAX 407.667.1779
Certificate of Authorization No. LC0000358

STATE OF FLORIDA DEPARTMENT OF TRANSPORTATION		
ROAD NO.	COUNTY	FINANCIAL PROJECT ID
CFRC P2S	VARIOUS	423446-9-52-01

CENTRAL FLORIDA COMMUTER RAIL TRANSIT (CFCRT) PHASE 2 SOUTH

GRAPHICS DETAILS

SHEET NO. 230

NOTICE: THE OFFICIAL RECORD OF THIS SHEET IS THE ELECTRONIC FILE SIGNED AND SEALED UNDER RULE 61G10-11.011, F.A.C.

DRAWING NO.
W20.712

Sign Type E

E



Environmental Graphics Designed by:

Bockstall Design Associates
680 Mourning Dove Circle
Lake Mary FL 32746
407.810.3442
jim@bockstalldesign.com

1 W20.712 **Top View Section**
Scale: 3"=1'-0"

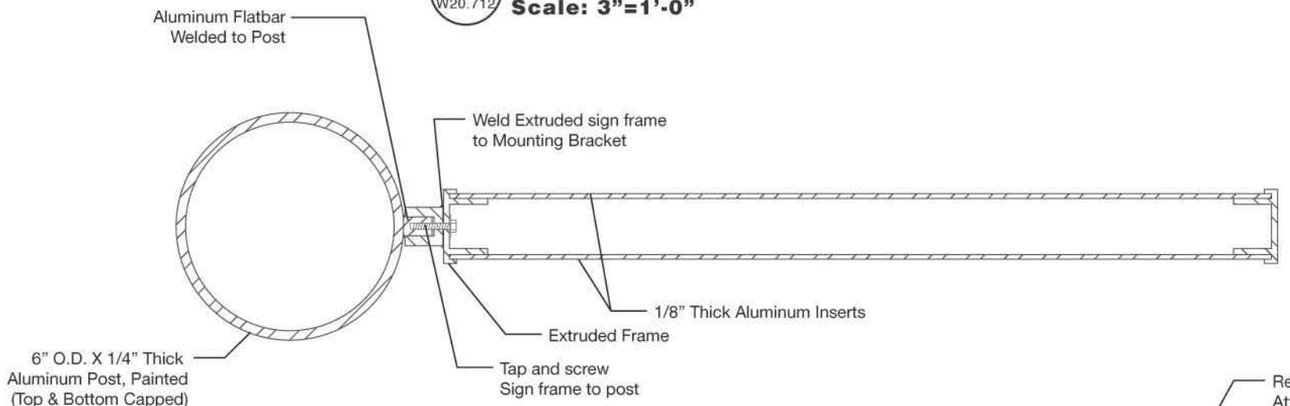

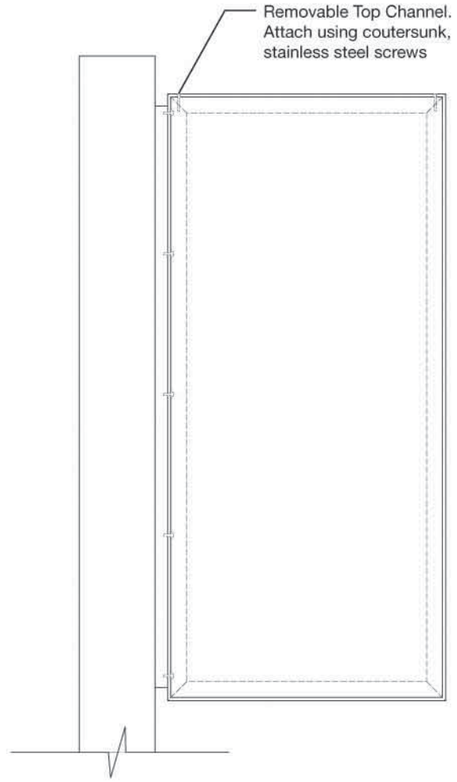

2 W20.712 **Top View Section**
Scale: 1"=1'-0"

NOTICE: THE OFFICIAL RECORD OF THIS SHEET IS THE ELECTRONIC FILE SIGNED AND SEALED UNDER RULE 61G10-11.011, F.A.C.

REVISIONS					
DATE	BY	DESCRIPTION	DATE	BY	DESCRIPTION

Christina E. Hite, RLA #1340
DIX.HITE + PARTNERS
150 W. JESSUP AVENUE
LONGWOOD, FLORIDA
TEL 407.667.1777
FAX 407.667.1779
Certificate of Authorization No. LC0000358

STATE OF FLORIDA
DEPARTMENT OF TRANSPORTATION

ROAD NO.	COUNTY	FINANCIAL PROJECT ID
CFRC P2S	VARIOUS	423446-9-52-01

CENTRAL FLORIDA COMMUTER RAIL TRANSIT (CFCRT) PHASE 2 SOUTH

GRAPHICS DETAILS

SHEET NO.
231

DRAWING NO.
W20.713

Sign Type F

F



1 W20.713 **Top View Section**
Scale: 1 1/2"=1'-0"

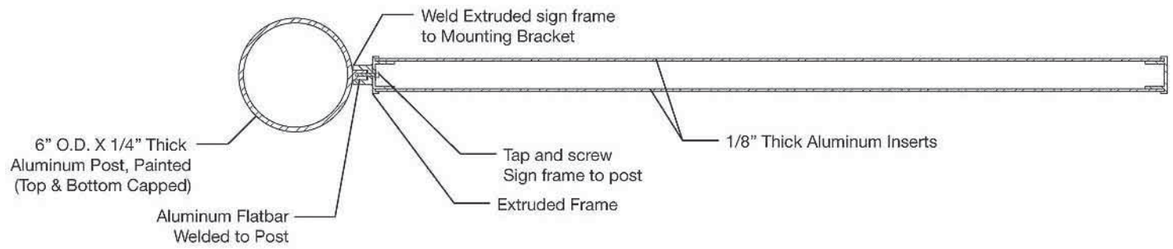

2 W20.713 **Front View Section**
Scale: 1 1/2"=1'-0"

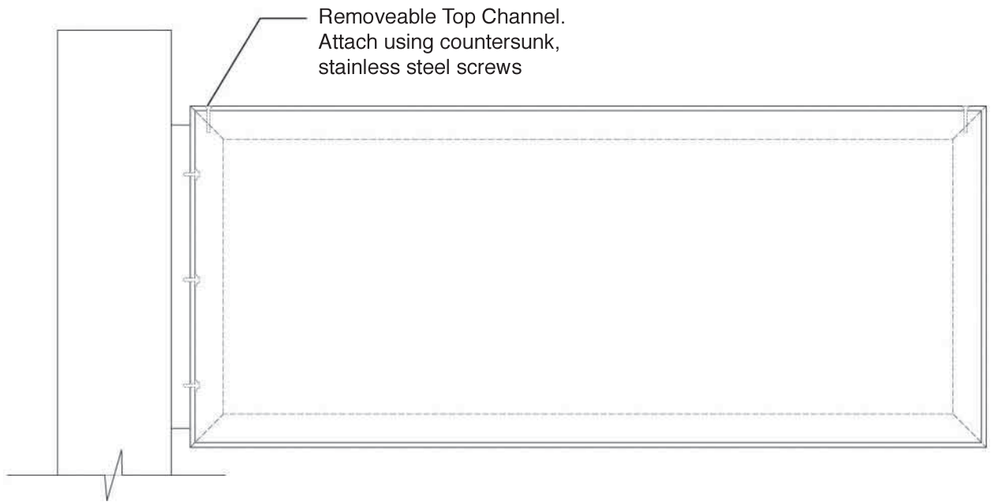

Environmental Graphics Designed by:

Bockstall Design Associates
680 Mourning Dove Circle
Lake Mary FL 32746
407.810.3442
jim@bockstalldesign.com

REVISIONS					
DATE	BY	DESCRIPTION	DATE	BY	DESCRIPTION

Christina E. Hite, RLA #1340
DIX.HITE + PARTNERS
150 W. JESSUP AVENUE
LONGWOOD, FLORIDA
TEL 407.667.1777
FAX 407.667.1779
Certificate of Authorization No. LC0000358

STATE OF FLORIDA
DEPARTMENT OF TRANSPORTATION

ROAD NO.	COUNTY	FINANCIAL PROJECT ID
CFRC P2S	VARIOUS	423446-9-52-01

CENTRAL FLORIDA COMMUTER RAIL TRANSIT (CFCRT) PHASE 2 SOUTH

GRAPHICS DETAILS

SHEET NO. 232

NOTICE: THE OFFICIAL RECORD OF THIS SHEET IS THE ELECTRONIC FILE SIGNED AND SEALED UNDER RULE 61G10-11.011, F.A.C.

Sign Type B **Sign Type C** **Sign Type E** **Sign Type F**

B C E F

Refer to Sheet S20.707

NOTE: See structural drawing S20.707
for steel connection plate and bolts.
Coordinate all sign connections with structural steel details.

Footings are required for all posts

1 W20.714 **Section - Footer Detail**
Scale: 1/4"=1"

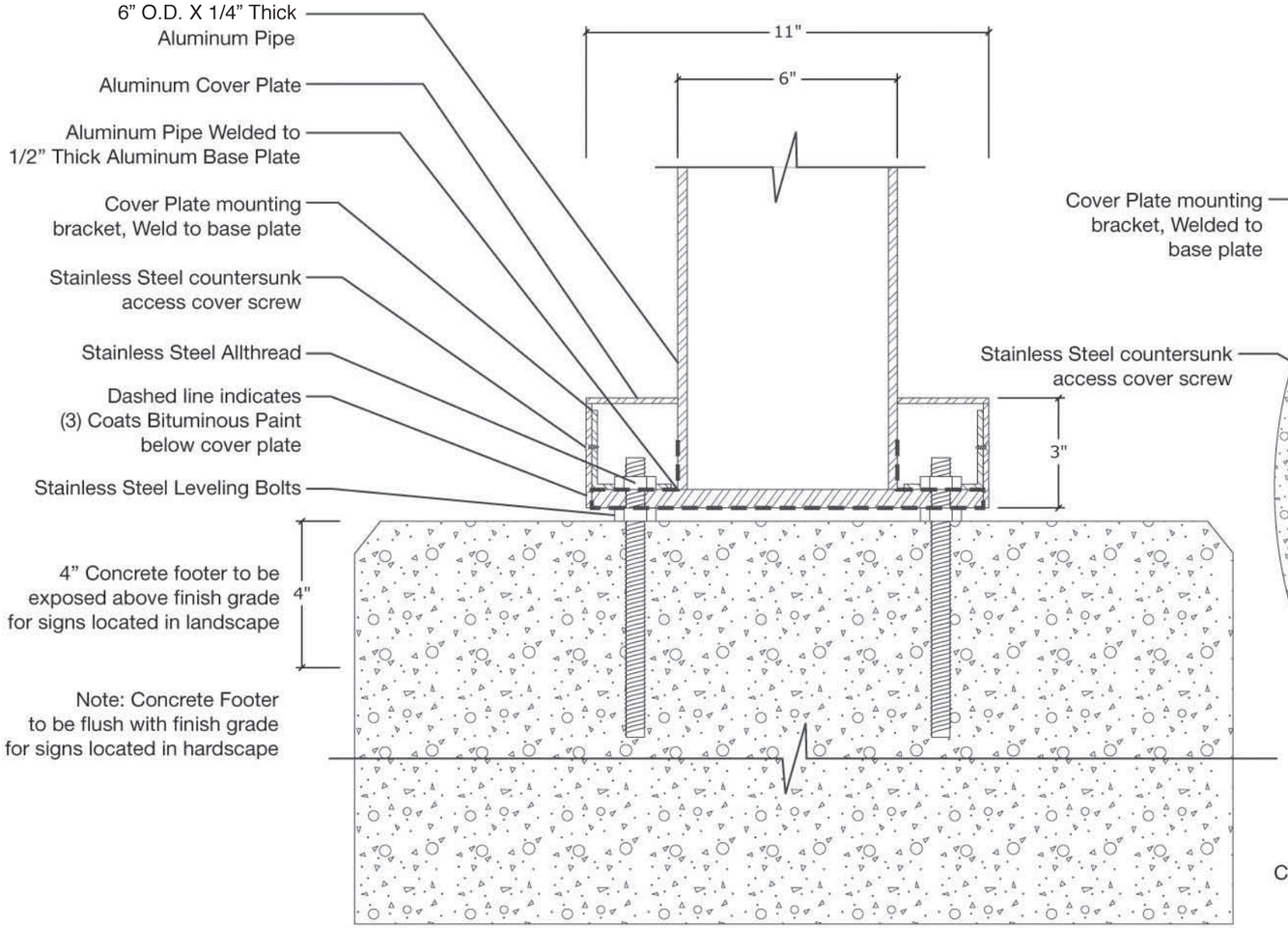

2 W20.714 **Top View Section - Footer Detail**
Scale: 1/4"=1"

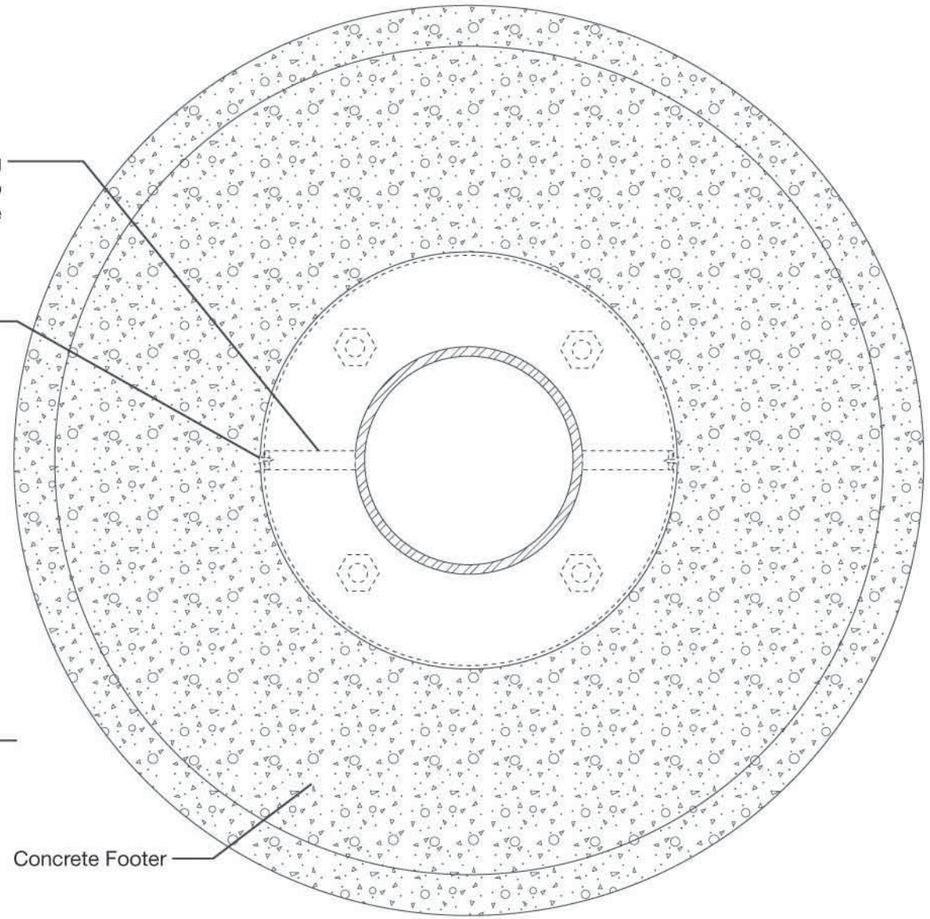

Environmental Graphics Designed by:

Bockstall Design Associates
680 Mourning Dove Circle
Lake Mary FL 32746
407.810.3442
jim@bockstalldesign.com

NOTICE: THE OFFICIAL RECORD OF THIS SHEET IS THE ELECTRONIC FILE SIGNED AND SEALED UNDER RULE 61G10-11.011, F.A.C.

REVISIONS					
DATE	BY	DESCRIPTION	DATE	BY	DESCRIPTION

Christina E. Hite, RLA #1340
DIX.HITE + PARTNERS
150 W. JESSUP AVENUE
LONGWOOD, FLORIDA
TEL 407.667.1777
FAX 407.667.1779
Certificate of Authorization No. LC0000358

STATE OF FLORIDA
DEPARTMENT OF TRANSPORTATION

ROAD NO.	COUNTY	FINANCIAL PROJECT ID
CFRC P2S	VARIOUS	423446-9-52-01

CENTRAL FLORIDA COMMUTER RAIL TRANSIT (CFCRT) PHASE 2 SOUTH

GRAPHICS DETAILS

SHEET NO. 233

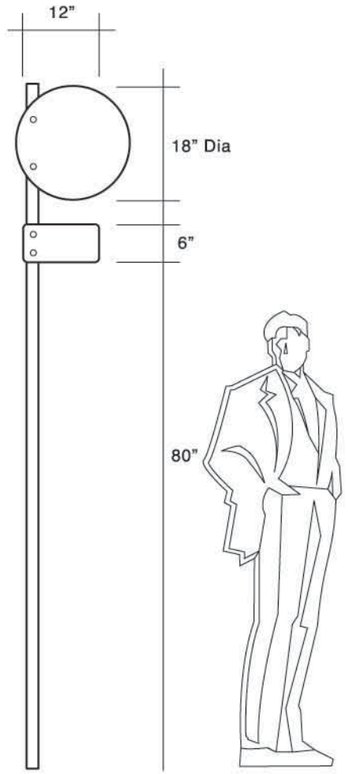



Sign Type G

G

1 W20.715

LYNX Bus Spaces ID

Standard-issue signs provided by LYNX
See Graphics Plans for locations

Scale: 1/2"=1'-0"

Environmental Graphics Designed by:

Bockstall Design Associates
680 Mourning Dove Circle
Lake Mary FL 32746
407.810.3442
jim@bockstalldesign.com

NOTICE: THE OFFICIAL RECORD OF THIS SHEET IS THE ELECTRONIC FILE SIGNED AND SEALED UNDER RULE 61G10-11.011, F.A.C.

REVISIONS					
DATE	BY	DESCRIPTION	DATE	BY	DESCRIPTION

Christina E. Hite, RLA #1340
DIX.HITE + PARTNERS
150 W. JESSUP AVENUE
LONGWOOD, FLORIDA
TEL 407.667.1777
FAX 407.667.1779
Certificate of Authorization No. LC0000358

STATE OF FLORIDA
DEPARTMENT OF TRANSPORTATION

ROAD NO.	COUNTY	FINANCIAL PROJECT ID
CFRC P2S	VARIOUS	423446-9-52-01

CENTRAL FLORIDA COMMUTER RAIL TRANSIT (CFCRT) PHASE 2 SOUTH

GRAPHICS DETAILS

SHEET NO.
234

DRAWING NO.
W20.716A

Sign Type I

I

CANOPY 'A'

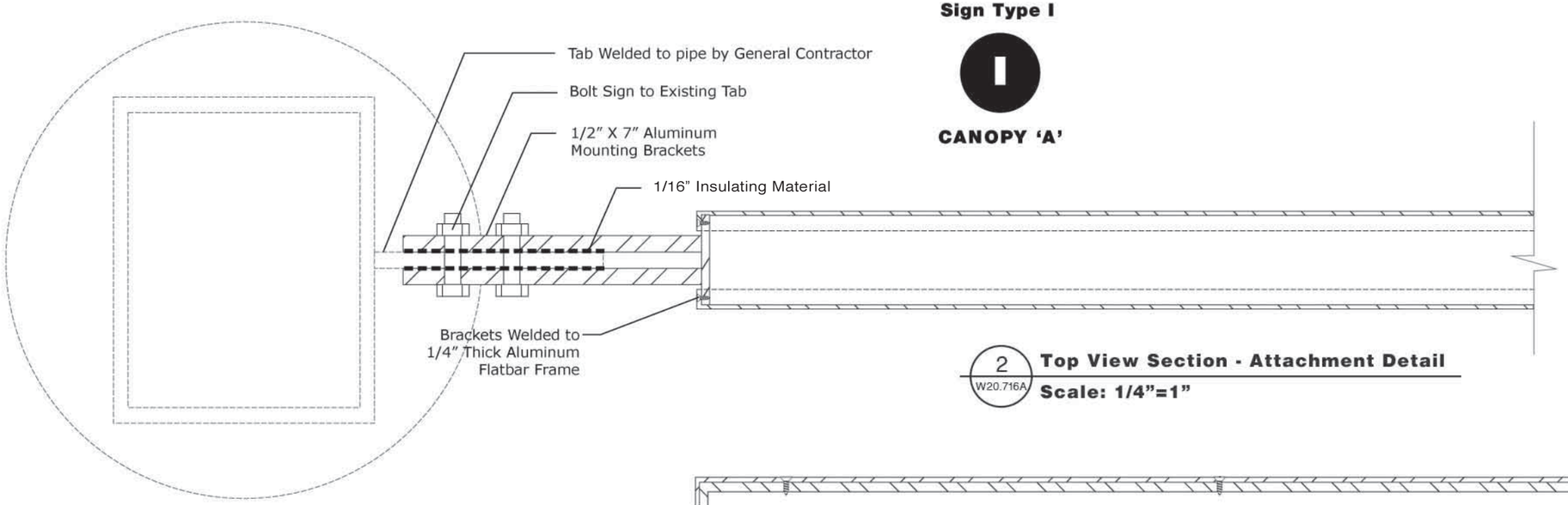

2 / W20.716A **Top View Section - Attachment Detail**
Scale: 1/4"=1"

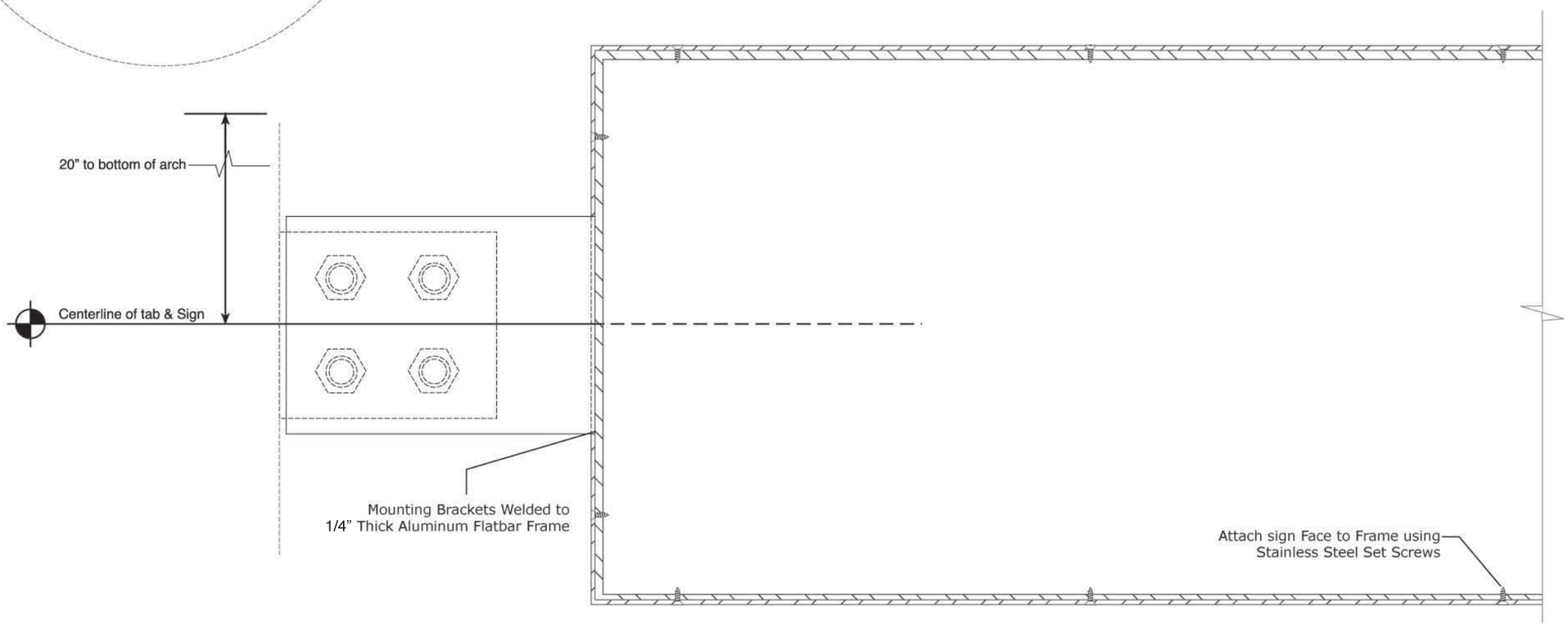

1 / W20.716A **Front View Section**
Scale: 1/4"=1"

Environmental Graphics Designed by:

Bockstall Design Associates
680 Mourning Dove Circle
Lake Mary FL 32746
407.810.3442
jim@bockstalldesign.com

REVISIONS					
DATE	BY	DESCRIPTION	DATE	BY	DESCRIPTION

Christina E. Hite, RLA #1340
DIX.HITE + PARTNERS
150 W. JESSUP AVENUE
LONGWOOD, FLORIDA
TEL 407.667.1777
FAX 407.667.1779
Certificate of Authorization No. LC0000358

STATE OF FLORIDA DEPARTMENT OF TRANSPORTATION		
ROAD NO.	COUNTY	FINANCIAL PROJECT ID
CFRC P2S	VARIOUS	423446-9-52-01

CENTRAL FLORIDA COMMUTER RAIL TRANSIT (CFCRT) PHASE 2 SOUTH

GRAPHICS DETAILS

SHEET NO. 235

NOTICE: THE OFFICIAL RECORD OF THIS SHEET IS THE ELECTRONIC FILE SIGNED AND SEALED UNDER RULE 61G10-11.011, F.A.C.

Sign Type K [In Landscape]

K

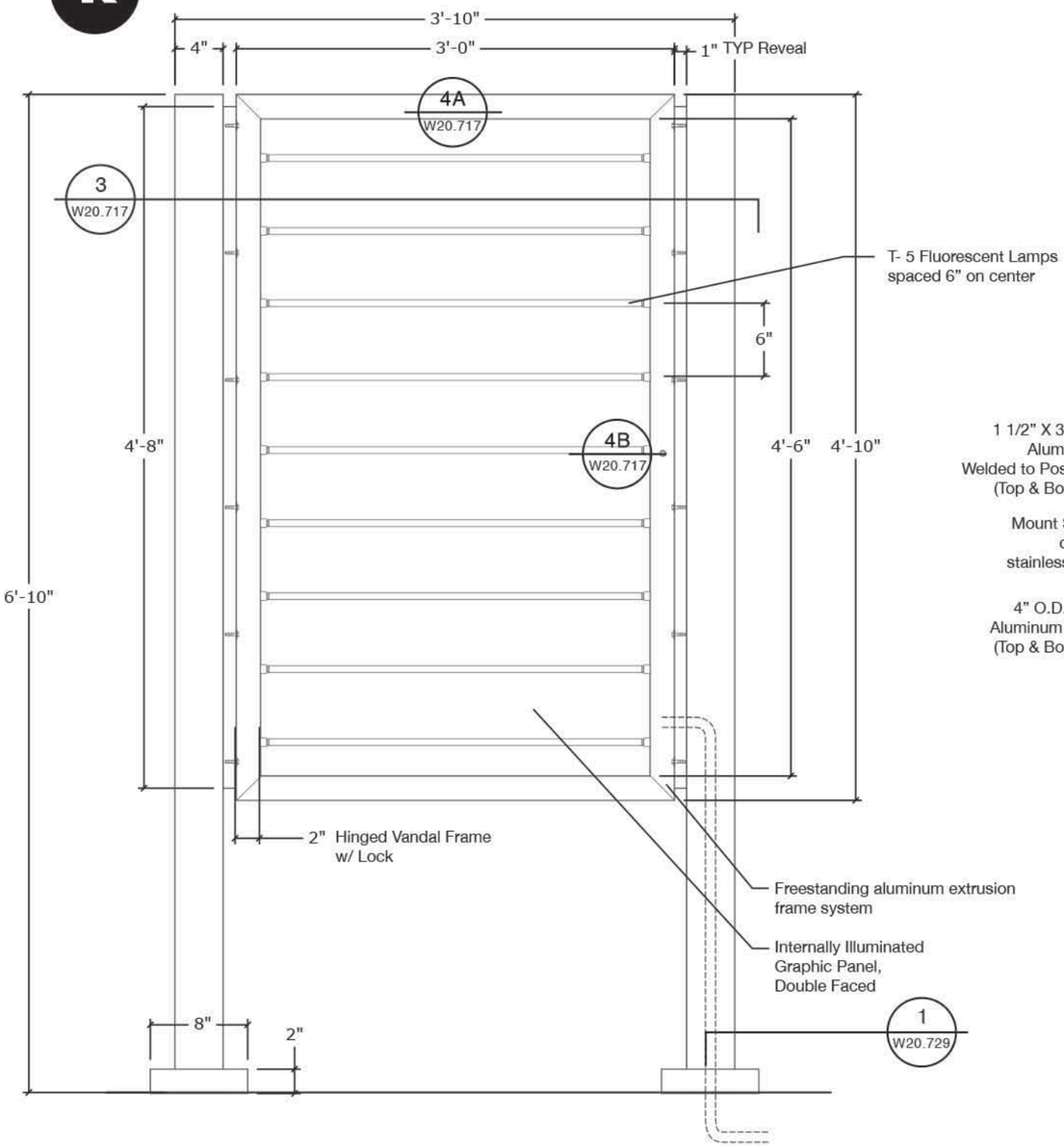

1 W20.717 **Elevation View**

Scale: 1"=1'-0"

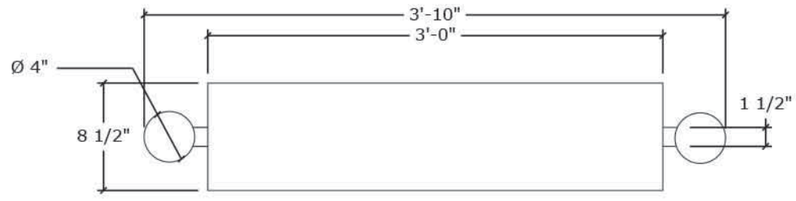

2 W20.717 **Top View**

Scale: 1"=1'-0"

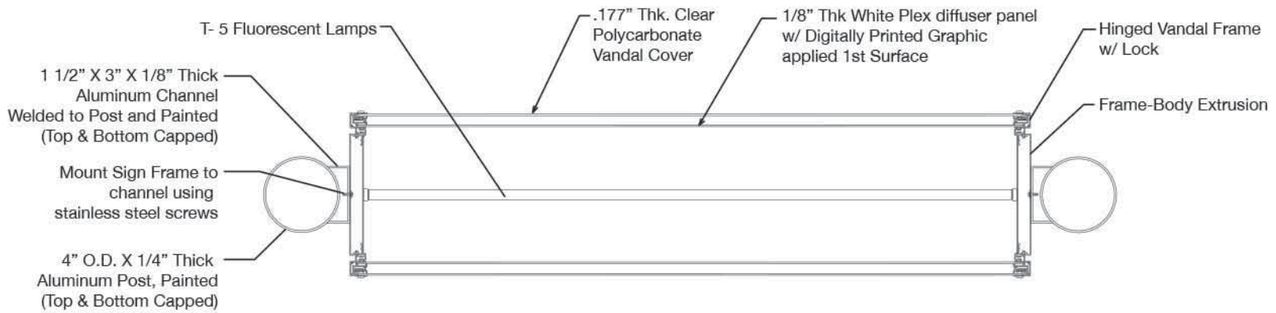

3 W20.717 **Top View Section Detail**

Scale: 1 1/2"=1'-0"

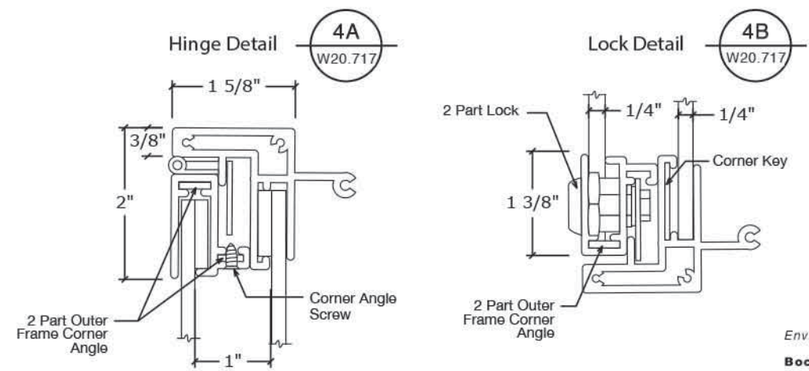

4 W20.717 **Vandal Frame System - Section Detail**

Scale: 1/2"=1"

Environmental Graphics Designed by:

Bockstall Design Associates
680 Mourning Dove Circle
Lake Mary FL 32746
407.810.3442
jim@bockstalldesign.com

NOTICE: THE OFFICIAL RECORD OF THIS SHEET IS THE ELECTRONIC FILE SIGNED AND SEALED UNDER RULE 61G10-11.011, F.A.C.

REVISIONS					
DATE	BY	DESCRIPTION	DATE	BY	DESCRIPTION

Christina E. Hite, RLA #1340
DIX.HITE + PARTNERS
150 W. JESSUP AVENUE
LONGWOOD, FLORIDA
TEL 407.667.1777
FAX 407.667.1779
Certificate of Authorization No. LC0000358

STATE OF FLORIDA
DEPARTMENT OF TRANSPORTATION

ROAD NO.	COUNTY	FINANCIAL PROJECT ID
CFRC P2S	VARIOUS	423446-9-52-01

CENTRAL FLORIDA COMMUTER RAIL TRANSIT (CFCRT) PHASE 2 SOUTH

GRAPHICS DETAILS

SHEET NO. 236

DRAWING NO.
W20.719

Sign Type L

L

1 / W20.719 **Tickets Sign**

Flag-mounted aluminum panel with reflective vinyl.
Double-faced. Non-illuminated.

Scale: 1/4”=1’-0”

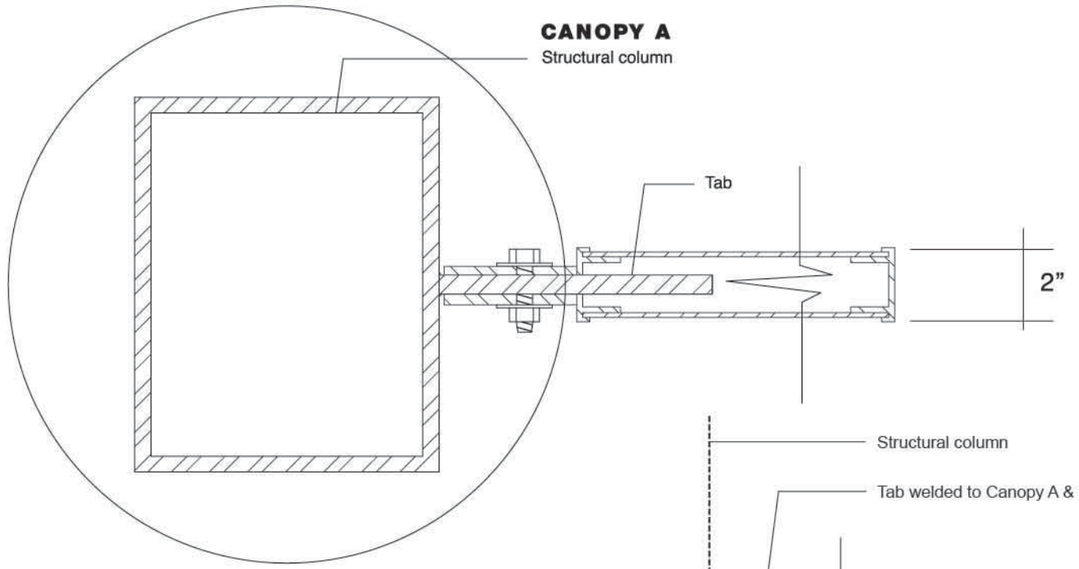

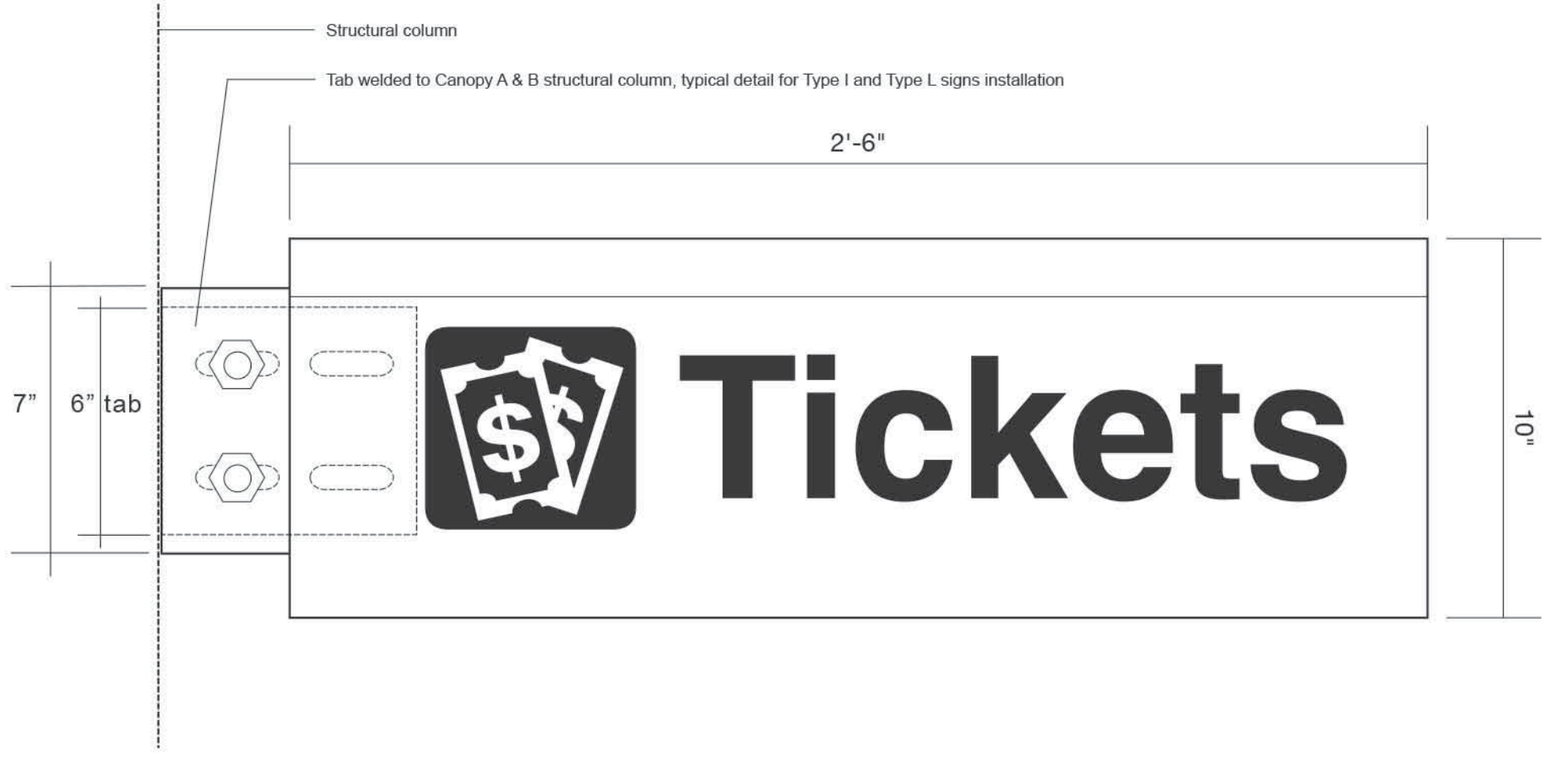

Environmental Graphics Designed by:

Bockstall Design Associates
680 Mourning Dove Circle
Lake Mary FL 32746
407.810.3442
jim@bockstalldesign.com

NOTICE: THE OFFICIAL RECORD OF THIS SHEET IS THE ELECTRONIC FILE SIGNED AND SEALED UNDER RULE 61G10-11.011, F.A.C.

REVISIONS					
DATE	BY	DESCRIPTION	DATE	BY	DESCRIPTION

Christina E. Hite, RLA #1340
DIX.HITE + PARTNERS
150 W. JESSUP AVENUE
LONGWOOD, FLORIDA
TEL 407.667.1777
FAX 407.667.1779
Certificate of Authorization No. LC0000358

STATE OF FLORIDA
DEPARTMENT OF TRANSPORTATION

ROAD NO.	COUNTY	FINANCIAL PROJECT ID
CFRC P2S	VARIOUS	423446-9-52-01

CENTRAL FLORIDA COMMUTER RAIL TRANSIT (CFCRT) PHASE 2 SOUTH

GRAPHICS DETAILS

SHEET NO. 237

CANOPY 'F'

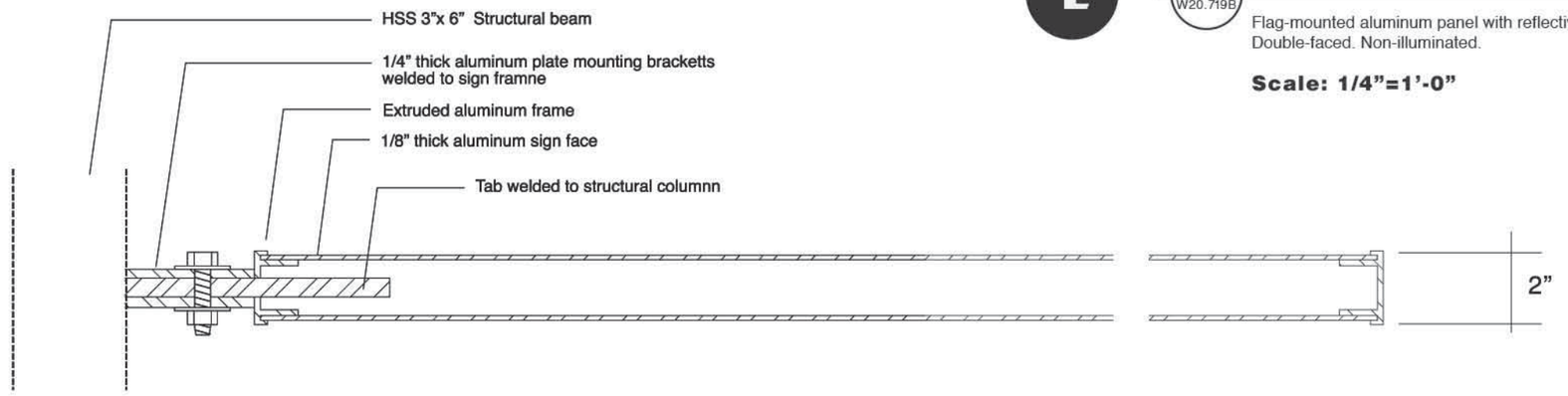

Sign Type L

L

1 W20.719B **Tickets Sign**

Flag-mounted aluminum panel with reflective vinyl.
Double-faced. Non-illuminated.

Scale: 1/4"=1'-0"

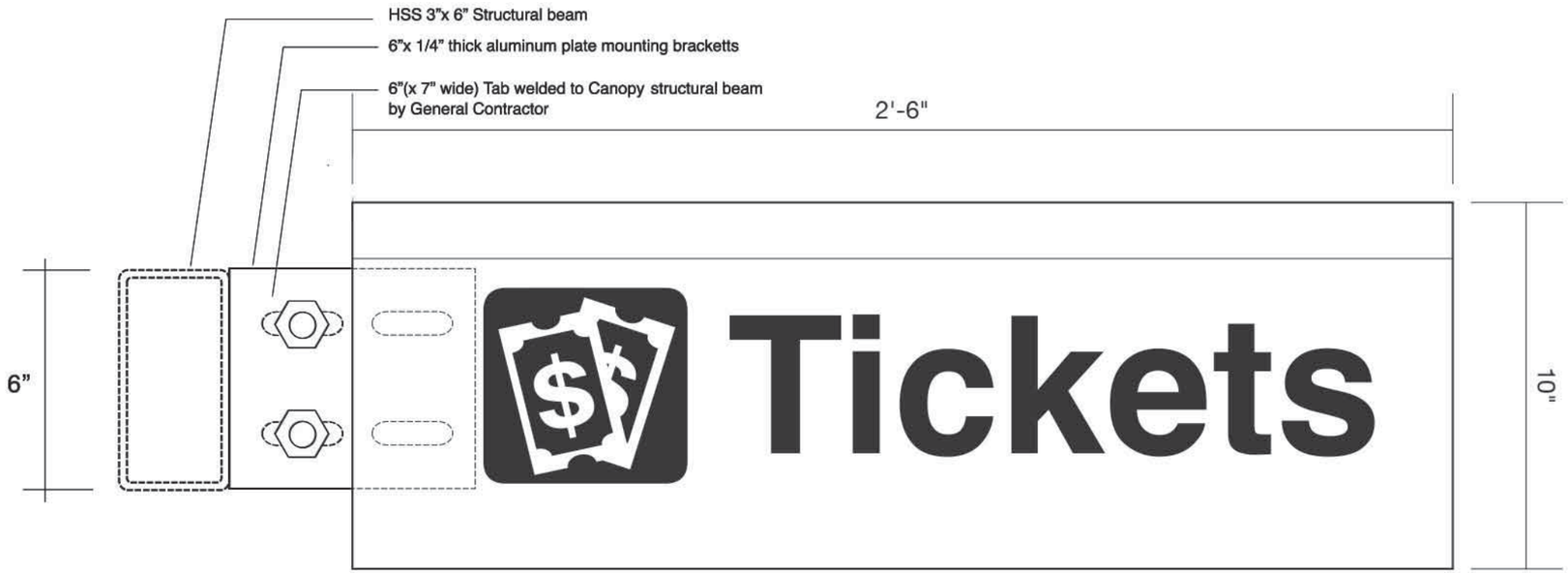

Environmental Graphics Designed by:

Bockstall Design Associates
680 Mourning Dove Circle
Lake Mary FL 32746
407.810.3442
jim@bockstalldesign.com

REVISIONS					
DATE	BY	DESCRIPTION	DATE	BY	DESCRIPTION

Christina E. Hite, RLA #1340
DIX.HITE + PARTNERS
150 W. JESSUP AVENUE
LONGWOOD, FLORIDA
TEL 407.667.1777
FAX 407.667.1779
Certificate of Authorization No. LC0000358

STATE OF FLORIDA DEPARTMENT OF TRANSPORTATION		
ROAD NO.	COUNTY	FINANCIAL PROJECT ID
CFRC P2S	VARIOUS	423446-9-52-01

CENTRAL FLORIDA COMMUTER RAIL TRANSIT (CFCRT) PHASE 2 SOUTH

GRAPHICS DETAILS

SHEET NO. 238

NOTICE: THE OFFICIAL RECORD OF THIS SHEET IS THE ELECTRONIC FILE SIGNED AND SEALED UNDER RULE 61G10-11.011, F.A.C.

DRAWING NO.
W20.720

Sign Type M

M

1 / W20.720 **Off Site Directional**

Freestanding aluminum post and panels.
Arrow sign to be oriented in the field [right/left/up arrow].
Six signs allocated per station.
Locations [TBD] and installation by local authorities.

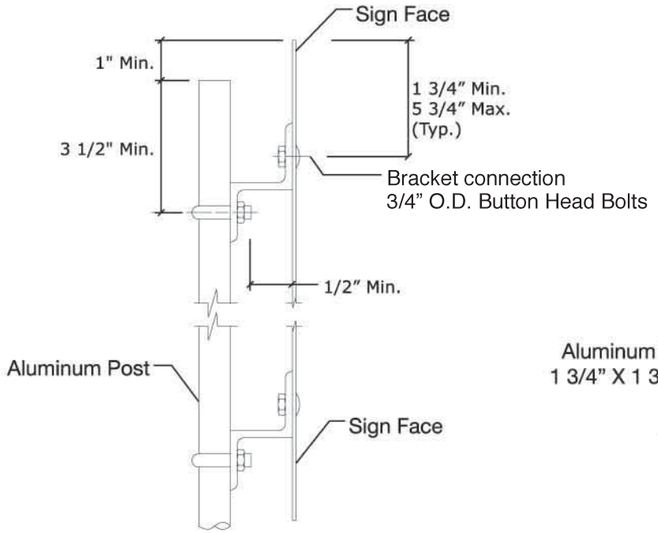

Side View - Scale: 1"=1'-0"

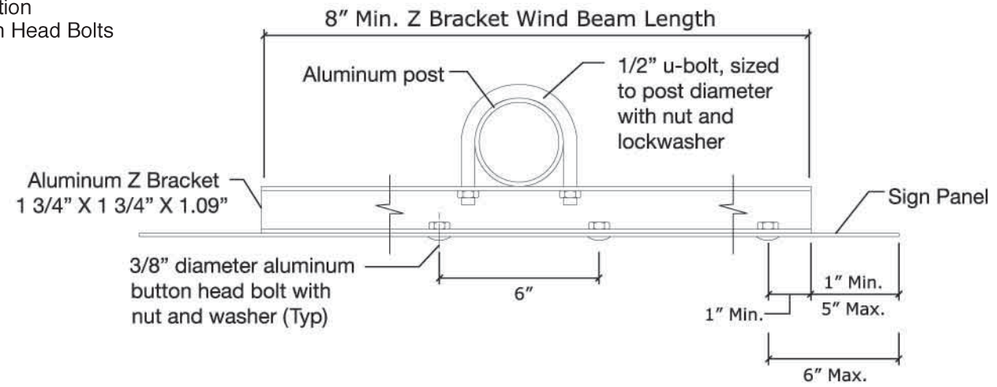

Top View - Scale: 1"=1'-0"

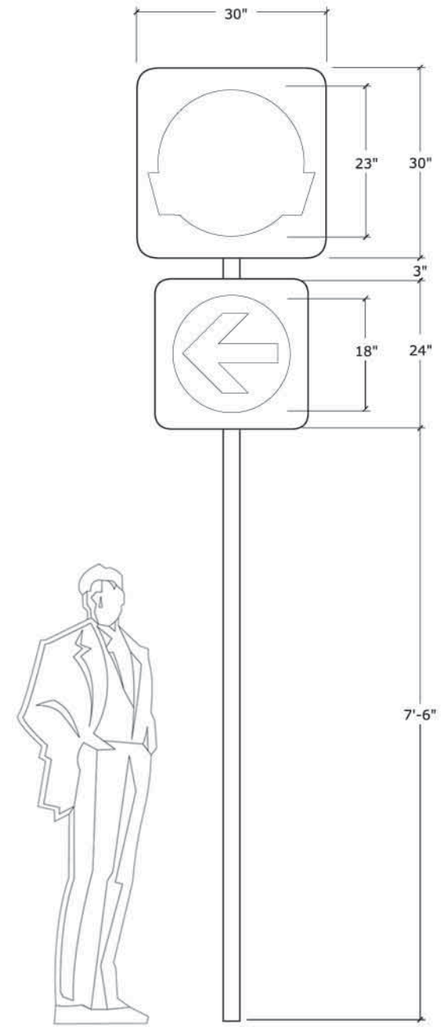

Scale: 1/8"=1'-0"

Environmental Graphics Designed by:

Bockstall Design Associates
680 Mourning Dove Circle
Lake Mary FL 32746
407.810.3442
jim@bockstalldesign.com

REVISIONS					
DATE	BY	DESCRIPTION	DATE	BY	DESCRIPTION

Christina E. Hite, RLA #1340
DIX.HITE + PARTNERS
150 W. JESSUP AVENUE
LONGWOOD, FLORIDA
TEL 407.667.1777
FAX 407.667.1779
Certificate of Authorization No. LC0000358

STATE OF FLORIDA
DEPARTMENT OF TRANSPORTATION

ROAD NO.	COUNTY	FINANCIAL PROJECT ID
CFRC P2S	VARIOUS	423446-9-52-01

CENTRAL FLORIDA COMMUTER RAIL TRANSIT (CFCRT) PHASE 2 SOUTH

GRAPHICS DETAILS

SHEET NO. 239

NOTICE: THE OFFICIAL RECORD OF THIS SHEET IS THE ELECTRONIC FILE SIGNED AND SEALED UNDER RULE 61G10-11.011, F.A.C.

DRAWING NO.
W20.722

Sign Type N

N

1 / W20.722 **Mini-High Platform ID**

Flag-mounted aluminum panel with reflective vinyl.
Double-faced. Non-illuminated.

Scale: 1/4"=1"

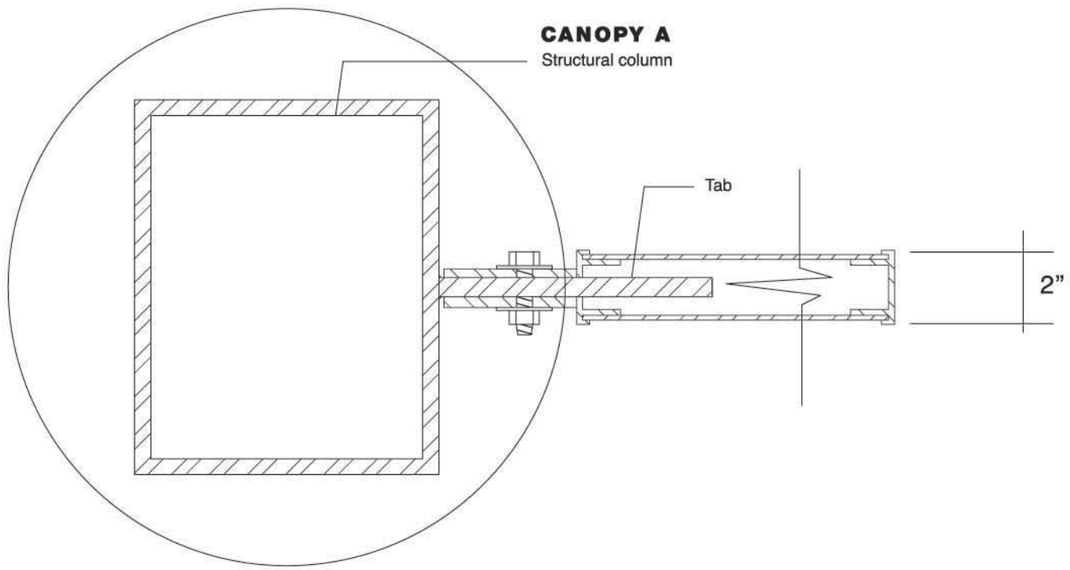

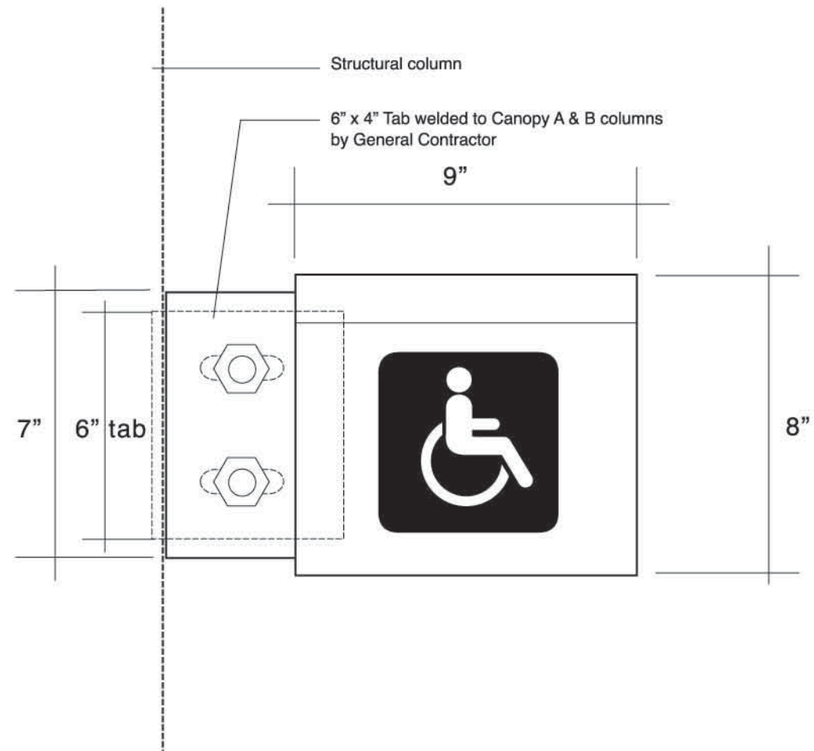

Environmental Graphics Designed by:

Bockstall Design Associates
680 Mourning Dove Circle
Lake Mary FL 32746
407.810.3442
jim@bockstalldesign.com

REVISIONS					
DATE	BY	DESCRIPTION	DATE	BY	DESCRIPTION

Christina E. Hite, RLA #1340
DIX.HITE + PARTNERS
150 W. JESSUP AVENUE
LONGWOOD, FLORIDA
TEL 407.667.1777
FAX 407.667.1779
Certificate of Authorization No. LC0000358

STATE OF FLORIDA
DEPARTMENT OF TRANSPORTATION

ROAD NO.	COUNTY	FINANCIAL PROJECT ID
CFRC P2S	VARIOUS	423446-9-52-01

CENTRAL FLORIDA COMMUTER RAIL TRANSIT (CFCRT) PHASE 2 SOUTH

GRAPHICS DETAILS

SHEET NO. 240

NOTICE: THE OFFICIAL RECORD OF THIS SHEET IS THE ELECTRONIC FILE SIGNED AND SEALED UNDER RULE 61G10-11.011, F.A.C.

DRAWING NO.
W20.723

Sign Type O

O

1
W20.723

Mini-High Conductor Step ID

Graphics to be painted - stenciled - directly on concrete step.
Typical for Canopy A and B only.

Scale: 1/2"=1'-0"

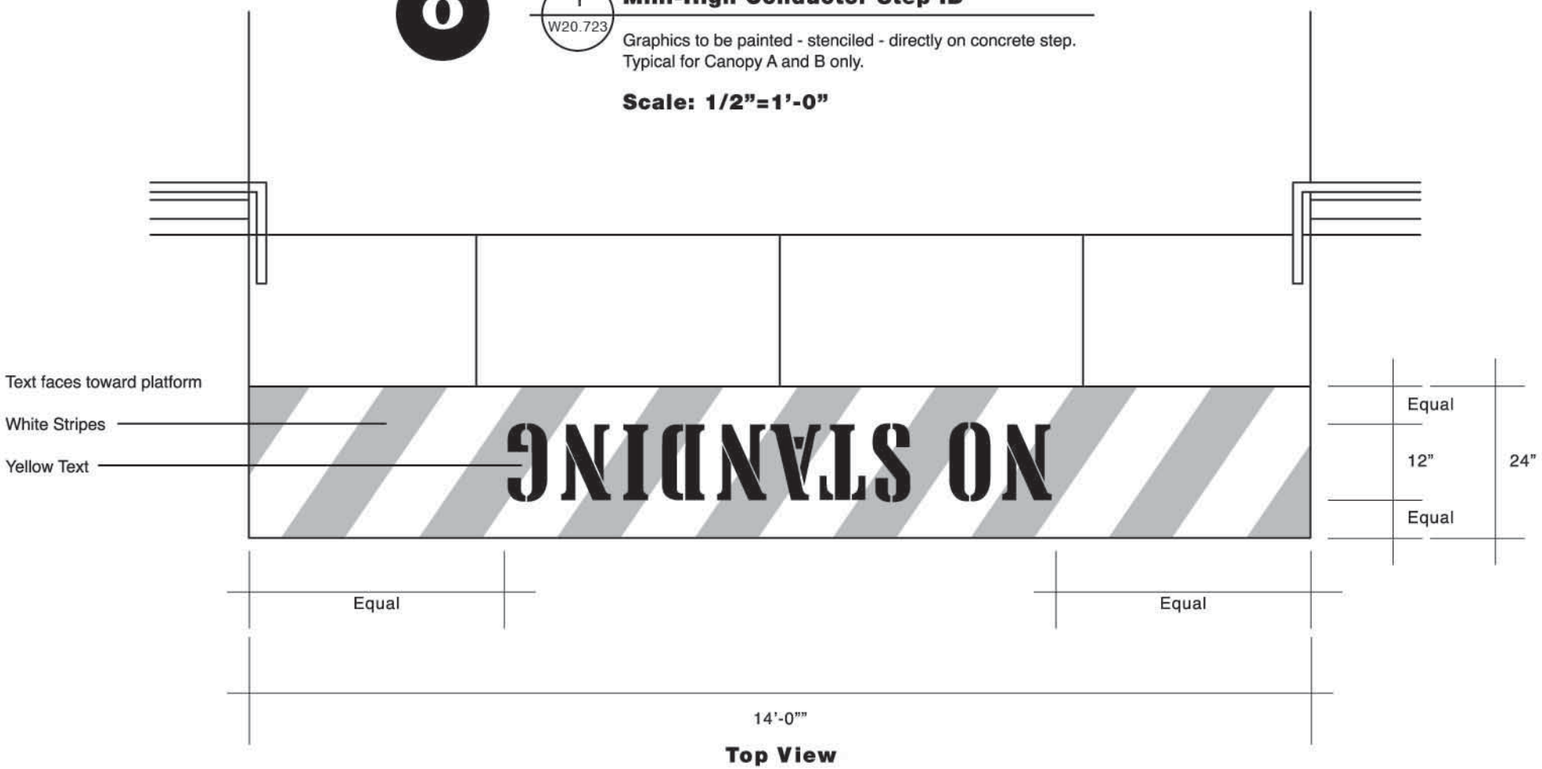

Top View

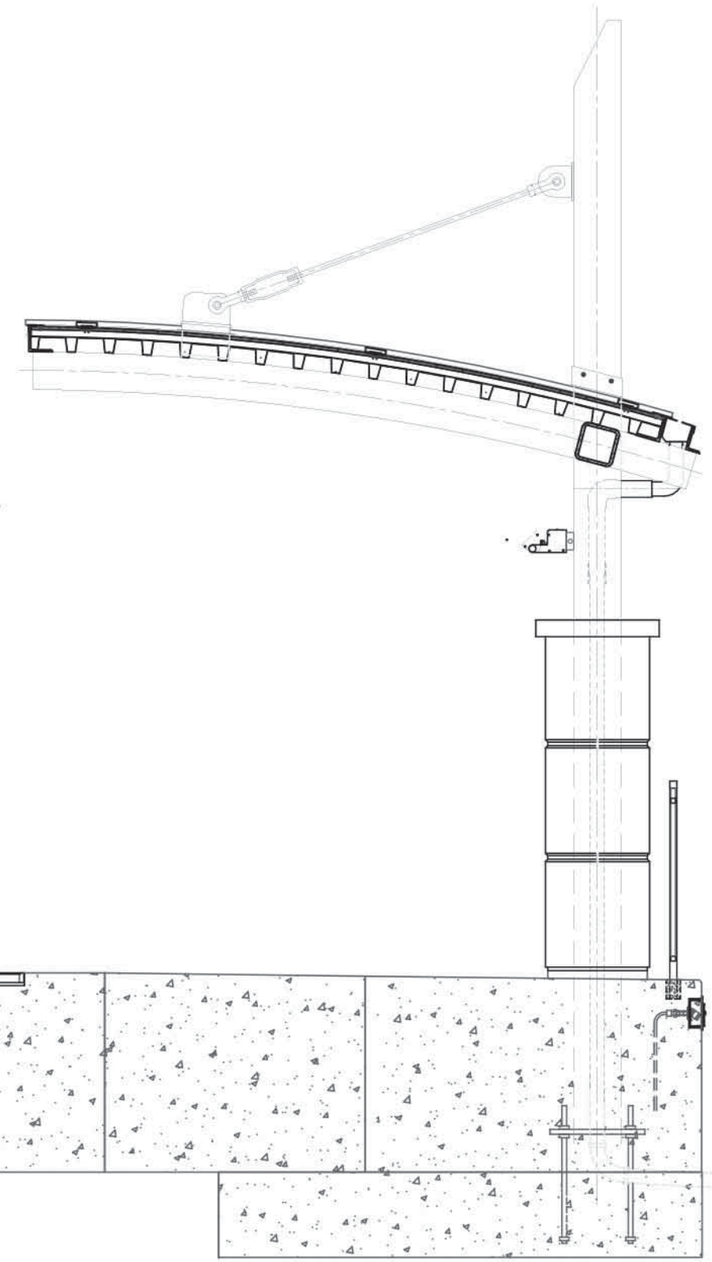

SECTION - FOR REFERENCE ONLY

Environmental Graphics Designed by:

Bockstall Design Associates
680 Mourning Dove Circle
Lake Mary FL 32746
407.810.3442
jim@bockstalldesign.com

REVISIONS					
DATE	BY	DESCRIPTION	DATE	BY	DESCRIPTION

Christina E. Hite, RLA #1340
DIX.HITE + PARTNERS
150 W. JESSUP AVENUE
LONGWOOD, FLORIDA
TEL 407.667.1777
FAX 407.667.1779
Certificate of Authorization No. LC0000358

STATE OF FLORIDA
DEPARTMENT OF TRANSPORTATION

ROAD NO.	COUNTY	FINANCIAL PROJECT ID
CFRC P2S	VARIOUS	423446-9-52-01

CENTRAL FLORIDA COMMUTER RAIL TRANSIT (CFCRT) PHASE 2 SOUTH

GRAPHICS DETAILS

SHEET NO.
241

NOTICE: THE OFFICIAL RECORD OF THIS SHEET IS THE ELECTRONIC FILE SIGNED AND SEALED UNDER RULE 61G10-11.011, F.A.C.

DRAWING NO.
W20.725

Sign Type Q

Q

1 W20.725 **Station ID - Braille**

Tactile ADA compliant sign wrapped around both posts of all Type K Directory/Kiosk signs - on Platform & in Landscape.

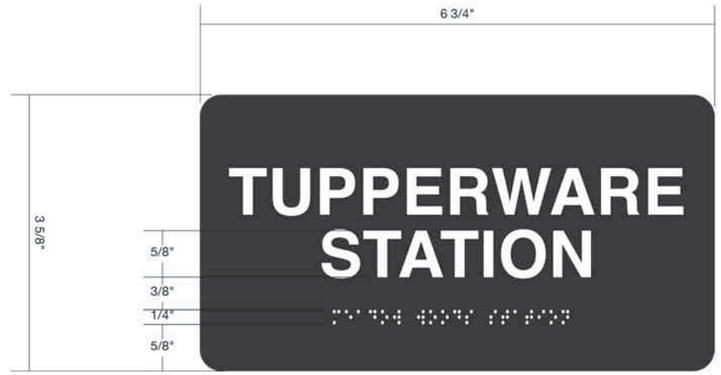

Half-size

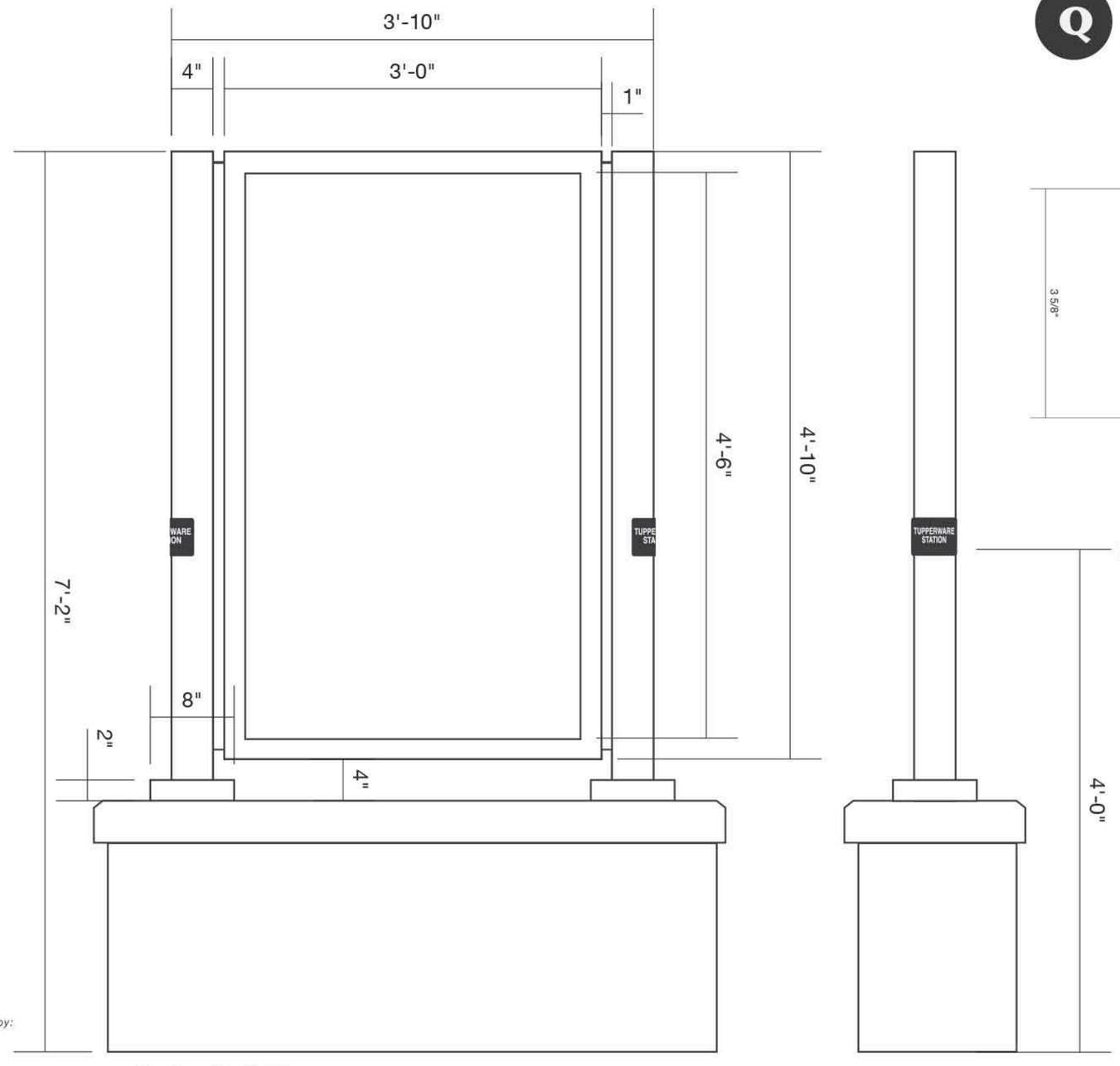

Scale: 1"=1'-0"

Environmental Graphics Designed by:

Bockstall Design Associates
680 Mourning Dove Circle
Lake Mary FL 32746
407.810.3442
jim@bockstalldesign.com

NOTICE: THE OFFICIAL RECORD OF THIS SHEET IS THE ELECTRONIC FILE SIGNED AND SEALED UNDER RULE 61G10-11.011, F.A.C.

REVISIONS					
DATE	BY	DESCRIPTION	DATE	BY	DESCRIPTION

Christina E. Hite, RLA #1340
DIX.HITE + PARTNERS
150 W. JESSUP AVENUE
LONGWOOD, FLORIDA
TEL 407.667.1777
FAX 407.667.1779
Certificate of Authorization No. LC0000358

STATE OF FLORIDA
DEPARTMENT OF TRANSPORTATION

ROAD NO.	COUNTY	FINANCIAL PROJECT ID
CFRC P2S	VARIOUS	423446-9-52-01

CENTRAL FLORIDA COMMUTER RAIL TRANSIT (CFCRT) PHASE 2 SOUTH

GRAPHICS DETAILS

SHEET NO.
242

DRAWING NO.
W20.726

Sign Type K [On Platform]

K

1 / W20.726 **Elevation View**

See Drawing W20.717 for fabrication details

See Drawing A20.794 for CIP details

See Drawing S20.704 for CIP details

NOTE: CIP concrete pedestal is not in sign vendor contract [by others]

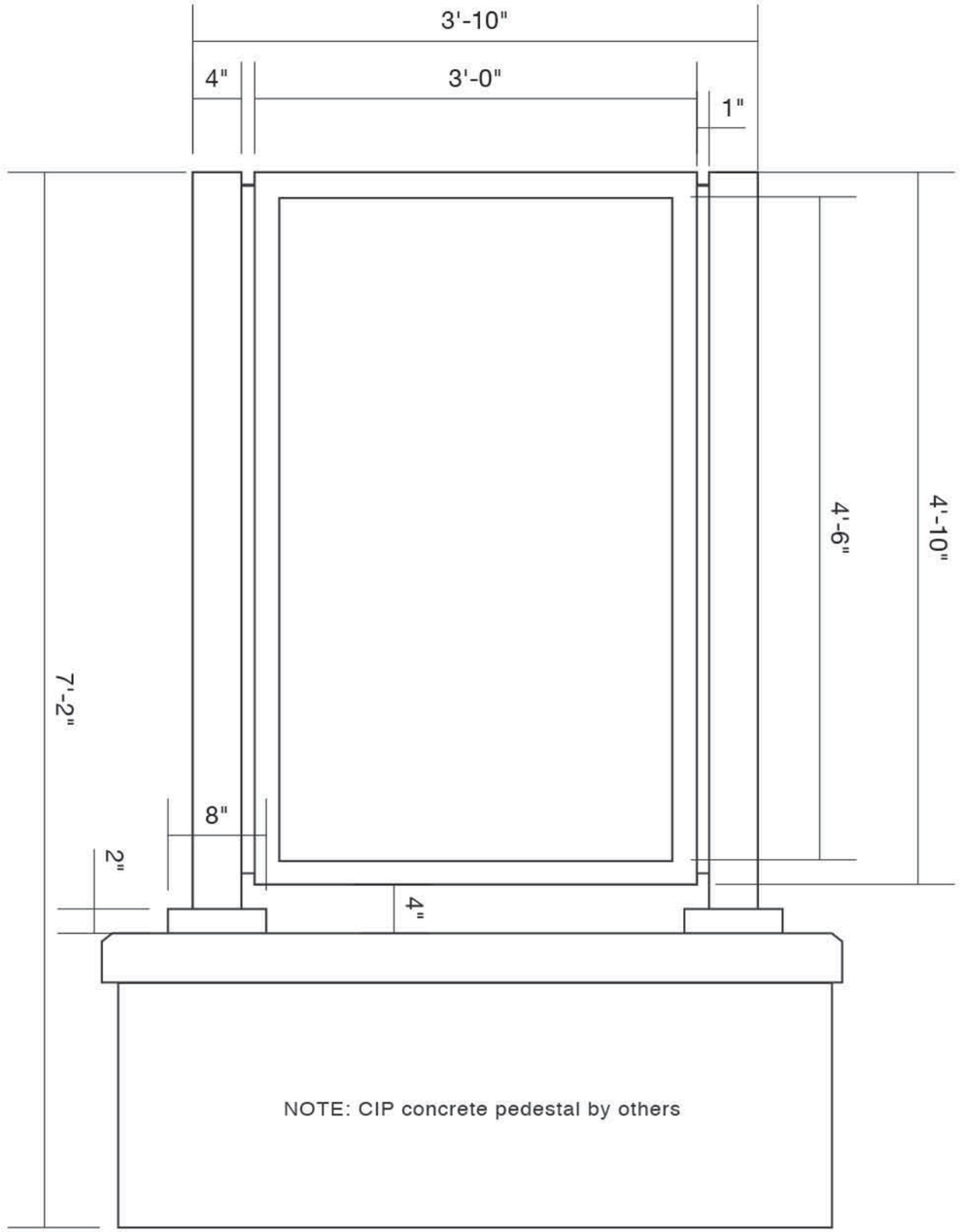

Scale: 1″ = 1′ - 0″

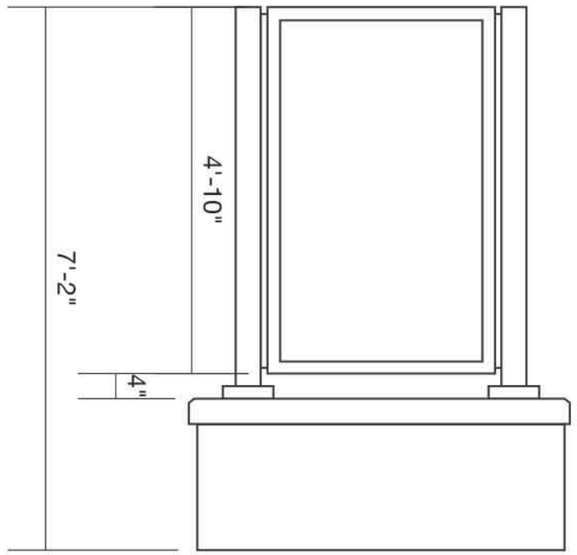

Scale: 1/2″ = 1′ - 0″

Environmental Graphics Designed by:

Bockstall Design Associates
680 Mourning Dove Circle
Lake Mary FL 32746
407.810.3442
jim@bockstalldesign.com

NOTICE: THE OFFICIAL RECORD OF THIS SHEET IS THE ELECTRONIC FILE SIGNED AND SEALED UNDER RULE 61G10-11.011, F.A.C.

REVISIONS					
DATE	BY	DESCRIPTION	DATE	BY	DESCRIPTION

Christina E. Hite, RLA #1340
DIX.HITE + PARTNERS
150 W. JESSUP AVENUE
LONGWOOD, FLORIDA
TEL 407.667.1777
FAX 407.667.1779
Certificate of Authorization No. LC0000358

STATE OF FLORIDA
DEPARTMENT OF TRANSPORTATION

ROAD NO.	COUNTY	FINANCIAL PROJECT ID
CFRC P2S	VARIOUS	423446-9-52-01

CENTRAL FLORIDA COMMUTER RAIL TRANSIT (CFCRT) PHASE 2 SOUTH

GRAPHICS DETAILS

SHEET NO.
243

DRAWING NO.
W20.727

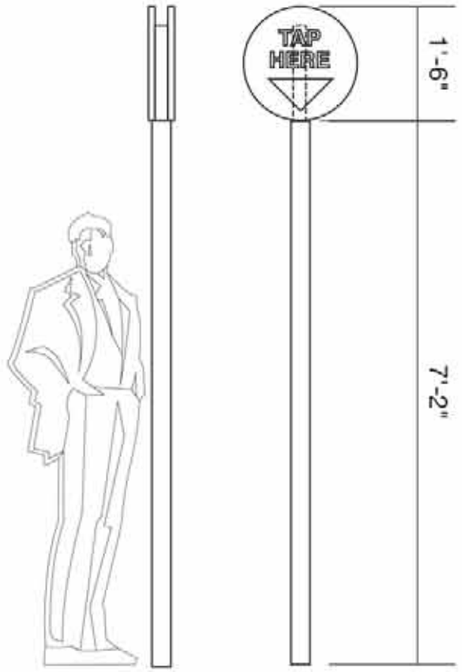

Scale: 1/2"=1'-0"

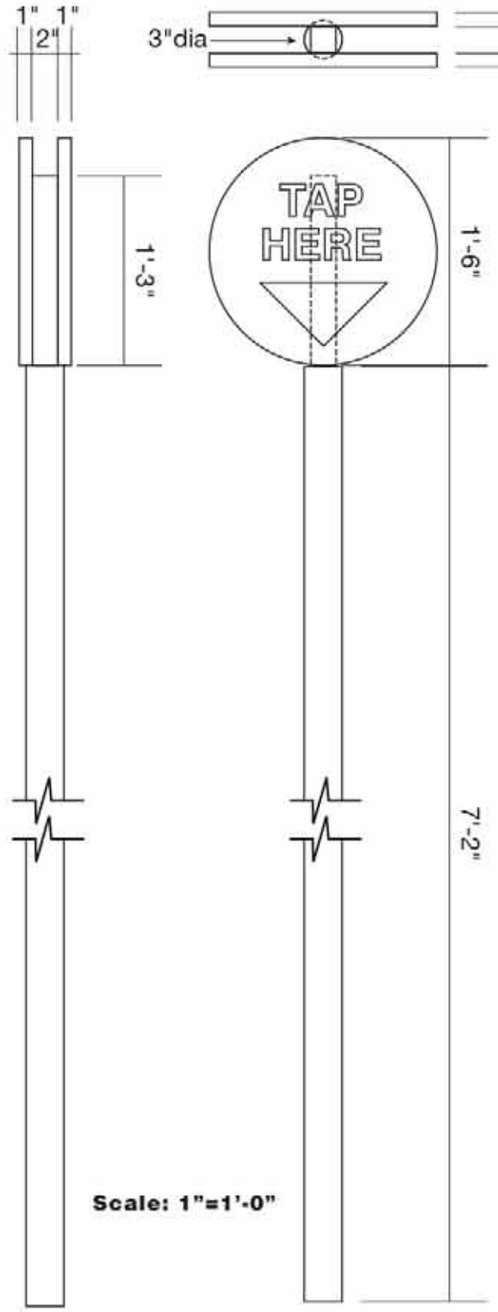

Scale: 1"=1'-0"

Sign Type P

P

1 W20.727 **Tap Here Sign**

Post mounted aluminum panel with reflective vinyl
Double-faced. Non-illuminated.

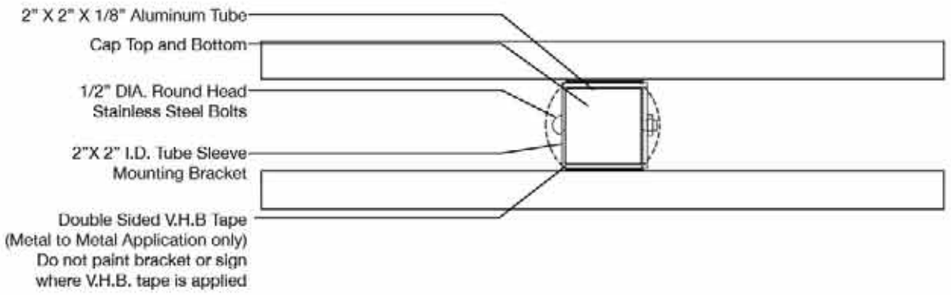

Scale: 3"=1'-0"

Environmental Graphics Designed by:

Bockstall Design Associates
680 Mourning Dove Circle
Lake Mary Fl. 32746
407.810.3442
jim@bockstalldesign.com

REVISIONS					
DATE	BY	DESCRIPTION	DATE	BY	DESCRIPTION

Christine E. Hite, P.E. #1340
DIX.HITE + PARTNERS
100 W. JESSUP AVENUE
LONGWOOD, FLORIDA
TEL 407.862.1737
FAX 407.862.1775
Certificate of Authorization No. LC0000358

STATE OF FLORIDA DEPARTMENT OF TRANSPORTATION		
ROAD NO.	COUNTY	FINANCIAL PROJECT ID
CFRC P2S	VARIOUS	423446-9-52-01

CENTRAL FLORIDA COMMUTER RAIL TRANSIT (CFCRT) PHASE 2 SOUTH

GRAPHICS DETAILS

SHEET NO.
244

NOTICE: THE OFFICIAL RECORD OF THIS SHEET IS THE ELECTRONIC FILE SIGNED AND SEALED UNDER RULE 61G10-11.011, F.A.C.

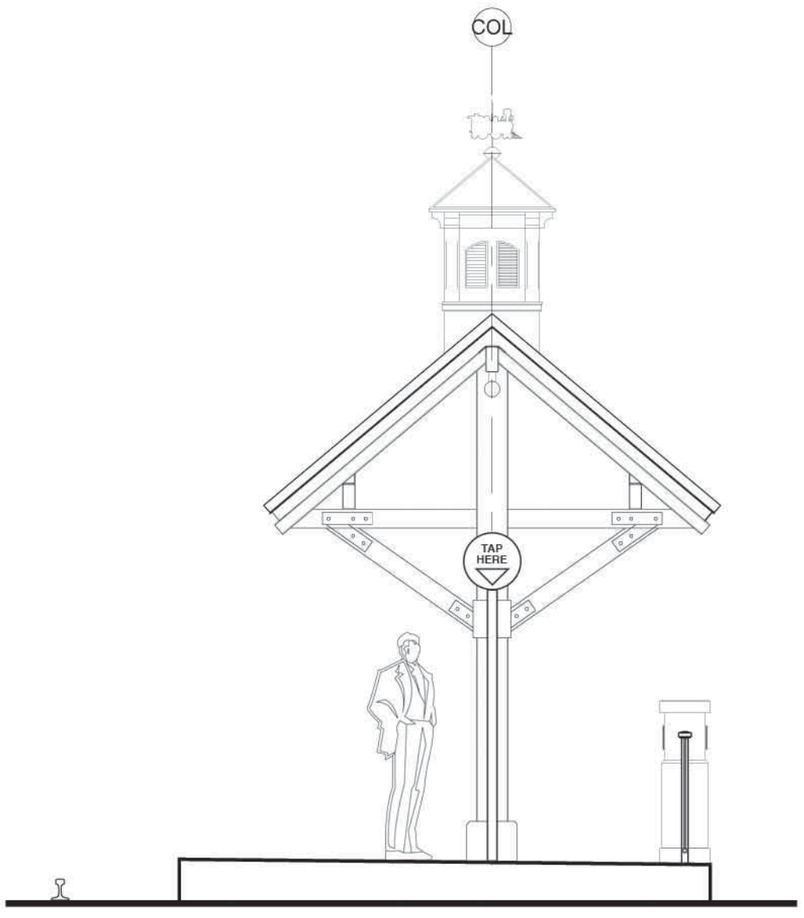

Sign Type P

P

1 / W20.728 **Tap Here Sign**

Post mounted aluminum panel with reflective vinyl.
Double-faced. Non-illuminated.

Scale: 1/4"=1'-0"

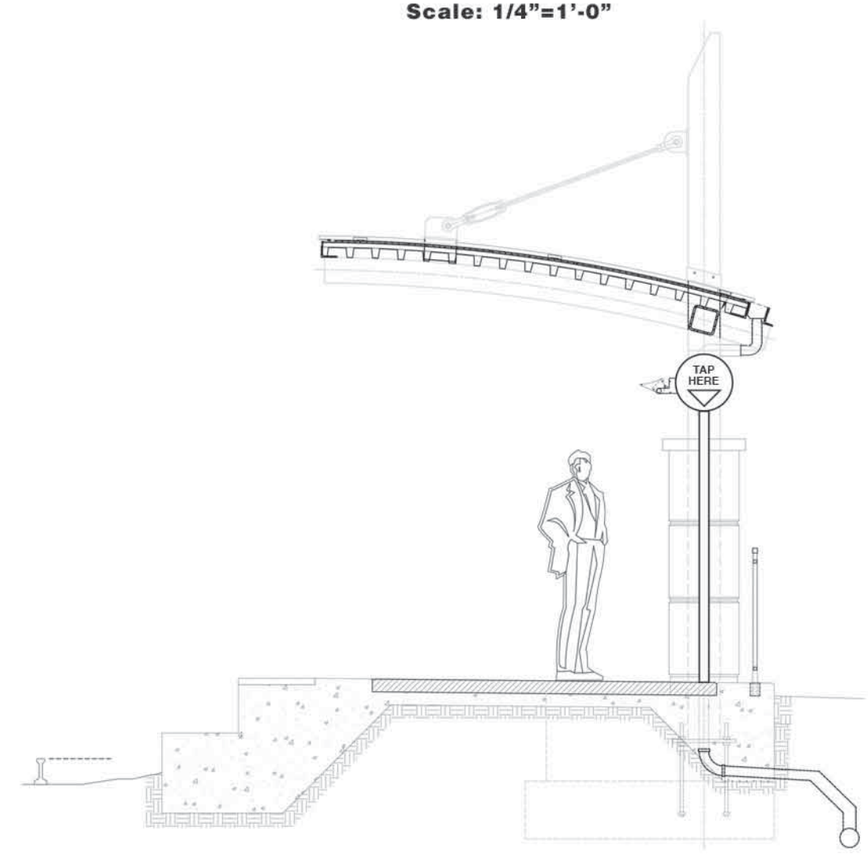

Environmental Graphics Designed by:

Bockstall Design Associates
680 Mourning Dove Circle
Lake Mary FL 32746
407.810.3442
jim@bockstalldesign.com

NOTICE: THE OFFICIAL RECORD OF THIS SHEET IS THE ELECTRONIC FILE SIGNED AND SEALED UNDER RULE 61G10-11.011, F.A.C.

REVISIONS					
DATE	BY	DESCRIPTION	DATE	BY	DESCRIPTION

Christina E. Hite, RLA #1340
DIX.HITE + PARTNERS
150 W. JESSUP AVENUE
LONGWOOD, FLORIDA
TEL 407.667.1777
FAX 407.667.1779
Certificate of Authorization No. LC0000358

STATE OF FLORIDA DEPARTMENT OF TRANSPORTATION		
ROAD NO.	COUNTY	FINANCIAL PROJECT ID
CFRC P2S	VARIOUS	423446-9-52-01

CENTRAL FLORIDA COMMUTER RAIL TRANSIT (CFCRT) PHASE 2 SOUTH

GRAPHICS DETAILS

SHEET NO.
245

DRAWING NO.
W20.729

Sign Type K [In Landscape]

K

1 W20.729 Section - Footer Detail
Scale: 1/4”=1”

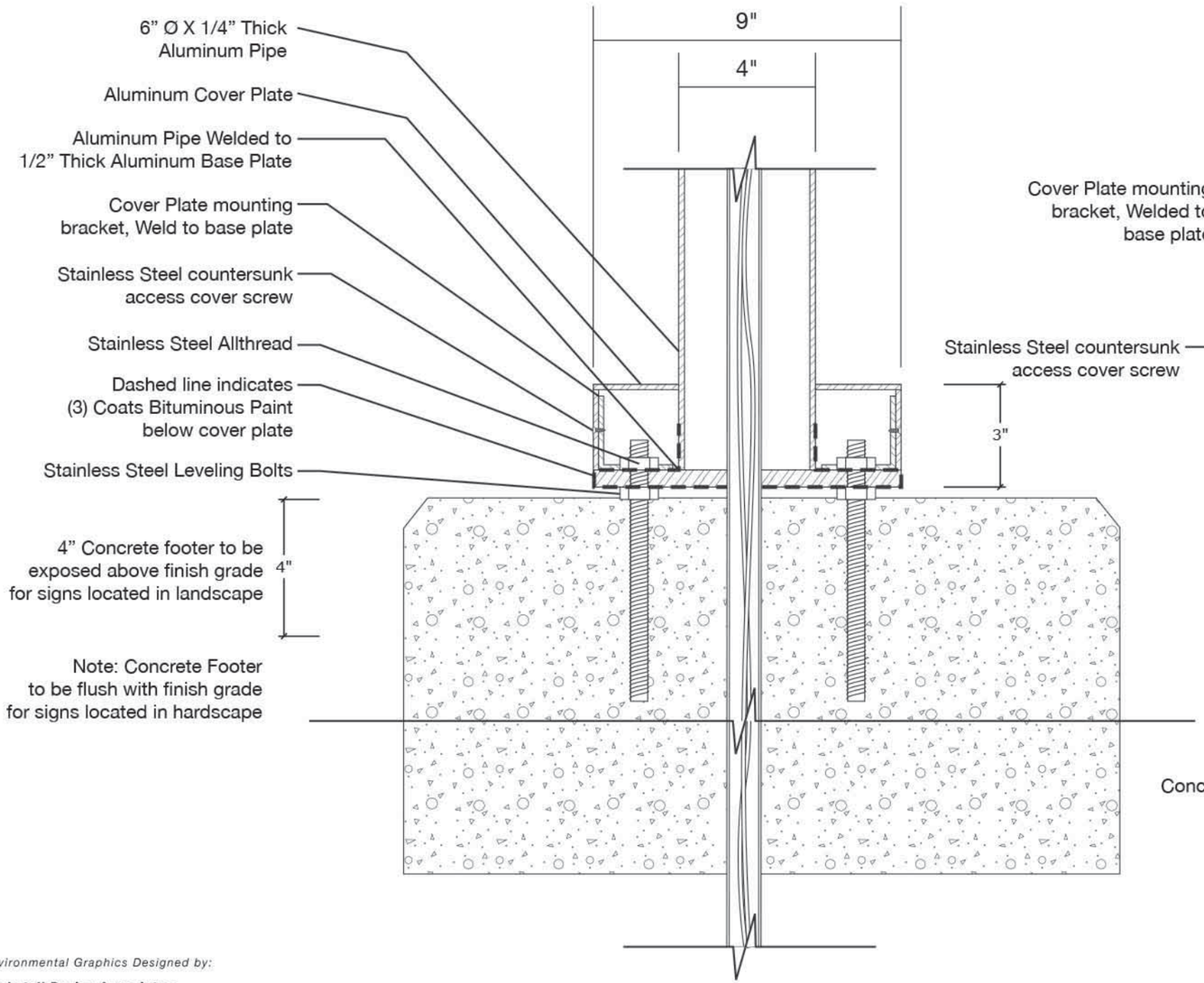

2 W20.729 Top View Section - Footer Detail
Scale: 1/4”=1”

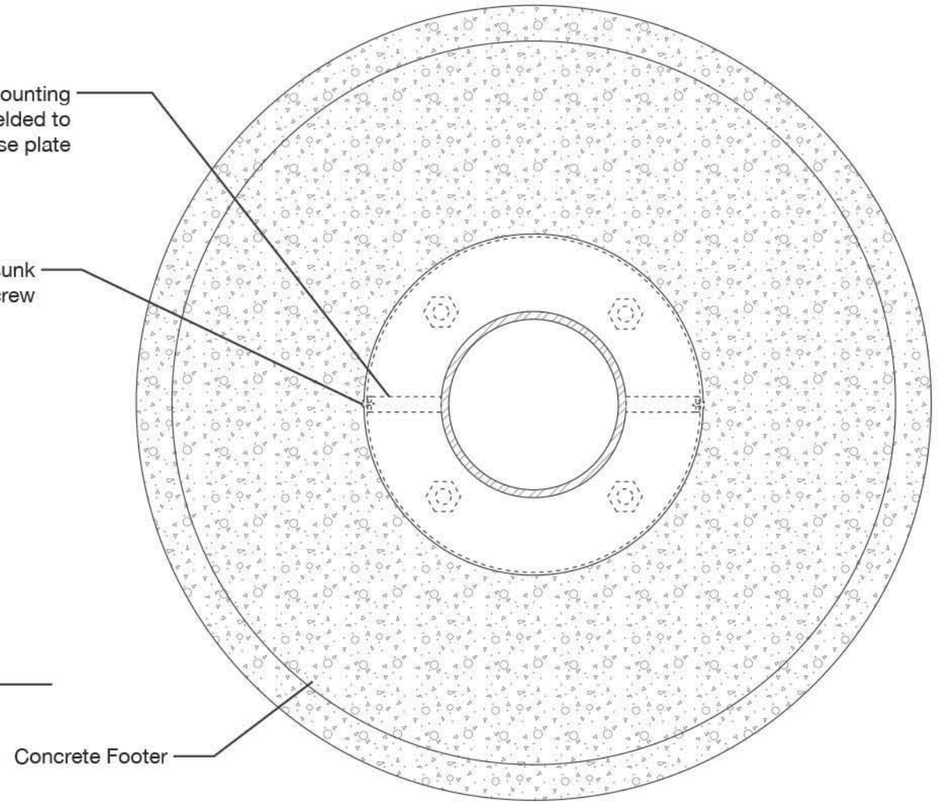

Environmental Graphics Designed by:

Bockstall Design Associates
680 Mourning Dove Circle
Lake Mary FL 32746
407.810.3442
jim@bockstalldesign.com

REVISIONS					
DATE	BY	DESCRIPTION	DATE	BY	DESCRIPTION

Christina E. Hite, RLA #1340
DIX.HITE + PARTNERS
150 W. JESSUP AVENUE
LONGWOOD, FLORIDA
TEL 407.667.1777
FAX 407.667.1779
Certificate of Authorization No. LC0000358

STATE OF FLORIDA DEPARTMENT OF TRANSPORTATION		
ROAD NO.	COUNTY	FINANCIAL PROJECT ID
CFRC P2S	VARIOUS	423446-9-52-01

CENTRAL FLORIDA COMMUTER RAIL TRANSIT (CFCRT) PHASE 2 SOUTH

GRAPHICS DETAILS

SHEET NO. 246

NOTICE: THE OFFICIAL RECORD OF THIS SHEET IS THE ELECTRONIC FILE SIGNED AND SEALED UNDER RULE 61G10-11.011, F.A.C.

Symbol Key [shown on every location plan]

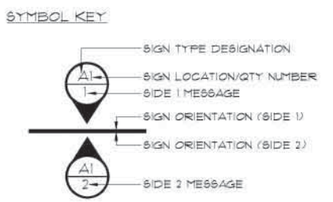

REFERENCE THIS SYMBOL TO THE MESSAGE SCHEDULE: G8Ø SERIES

Message Schedule [case-sensitive]

Sign Type	Message	Sign Type	Message	Sign Type	Message
W17.007J A1-1	POINCIANA STATION Entrance	W17.007E E1-1	Trains [train symbol] [right arrow]	W17.007A F1-1	Northbound [up arrow] Southbound [left arrow]

Text Message

Drawing Number

Side 1

Sign Type & Location



[train symbol]



[up arrow]
Sign Type E Only



[tickets symbol]



[handicap symbol]



[left arrow]

Environmental Graphics Designed by:

Bockstall Design Associates
680 Mourning Dove Circle
Lake Mary FL 32746
407.810.3442
jim@bockstalldesign.com

REVISIONS					
DATE	BY	DESCRIPTION	DATE	BY	DESCRIPTION

Christina E. Hite, RLA #1340
DIX.HITE + PARTNERS
150 W. JESSUP AVENUE
LONGWOOD, FLORIDA
TEL 407.667.1777
FAX 407.667.1779
Certificate of Authorization No. LC0000358

STATE OF FLORIDA
DEPARTMENT OF TRANSPORTATION

ROAD NO.	COUNTY	FINANCIAL PROJECT ID
CFRC P2S	VARIOUS	423446-9-52-01

CENTRAL FLORIDA COMMUTER RAIL TRANSIT (CFCRT) PHASE 2 SOUTH

GENERAL INFORMATION
MESSAGE SCHEDULE

SHEET NO.
247

NOTICE: THE OFFICIAL RECORD OF THIS SHEET IS THE ELECTRONIC FILE SIGNED AND SEALED UNDER RULE 61G10-11.011, F.A.C.

DRAWING NO.
W20.801

Color Schedule [Paint - Vinyl - Acrylic]

Type	Color	Type	Color	Type	Color
Paint - P1	GREEN - PMS 5545C	Vinyl - V1	YELLOW - REFLECTIVE Reflective “Yellow”	Acrylic - A1	WHITE Plexiglas 7328 “White”
Paint - P2	WHITE - Matthews N202SP	Vinyl - V2	WHITE- REFLECTIVE Reflective “White”	Acrylic - A2	YELLOW Plexiglas 2016 “Yellow “
Paint - P3	BLACK - Matthews N923SP	Vinyl - V3	ORANGE - REFLECTIVE Reflective “Orange”		
		Vinyl - V4	BLUE - REFLECTIVE Reflective “Light Blue”		
		Vinyl - V5	BLACK - REFLECTIVE Reflective “Black”		

Environmental Graphics Designed by:

Bockstall Design Associates
680 Mourning Dove Circle
Lake Mary FL 32746
407.810.3442
jim@bockstalldesign.com

REVISIONS

DATE	BY	DESCRIPTION	DATE	BY	DESCRIPTION

Christina E. Hite, RLA #1340
DIX.HITE + PARTNERS
150 W. JESSUP AVENUE
LONGWOOD, FLORIDA
TEL 407.667.1777
FAX 407.667.1779
Certificate of Authorization No. LC0000358

STATE OF FLORIDA
DEPARTMENT OF TRANSPORTATION

ROAD NO.	COUNTY	FINANCIAL PROJECT ID
CFRC P2S	VARIOUS	423446-9-52-01

CENTRAL FLORIDA COMMUTER RAIL TRANSIT (CFCRT) PHASE 2 SOUTH

COLOR SCHEDULE

SHEET NO.
248

NOTICE: THE OFFICIAL RECORD OF THIS SHEET IS THE ELECTRONIC FILE SIGNED AND SEALED UNDER RULE 61G10-11.011, F.A.C.

DRAWING NO.
W20.802

Digitally printed SunRail Logo vinyl decal [translucent, backlit]

Translucent White 2-mil adhesive Graphic Film

Print image at 300dpi at 100% with solvent-based inks

Luster Overlaminate for ultraviolet and physical protection

Digitally printed SunRail Logo vinyl decal [opaque, non-illuminated]

Opaque White 2-mil adhesive Graphic Film

Print image at 300dpi at 100% with solvent-based inks

Luster Overlaminate for ultraviolet and physical protection

Reflective Vinyl for text and symbols [opaque, non-illuminated]

7-mil Reflective adhesive Graphic Film

Legend

Vinyl Color V1

Acrylic Color A1

Paint Color P1

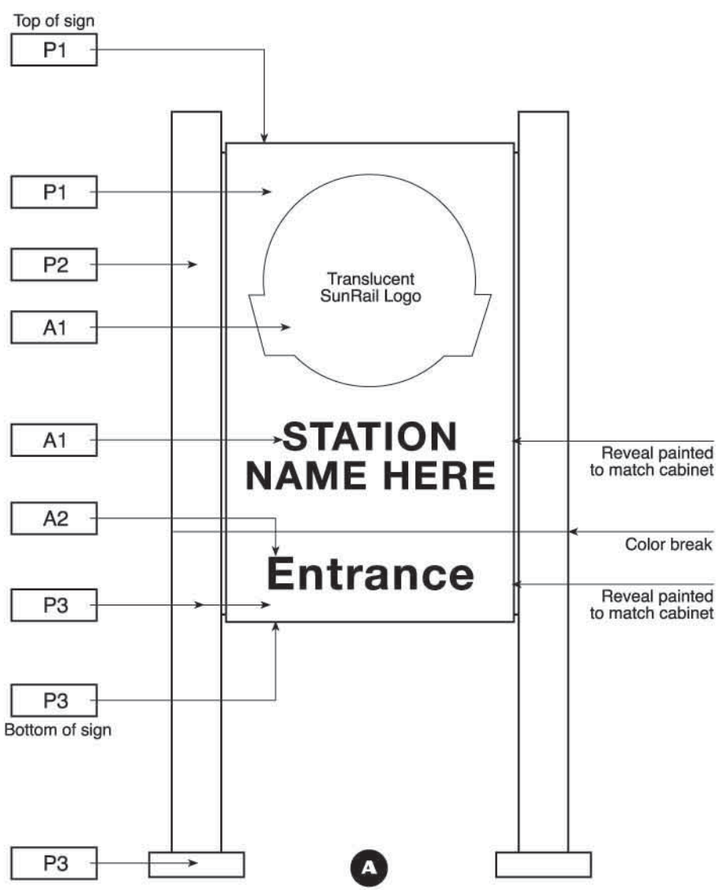

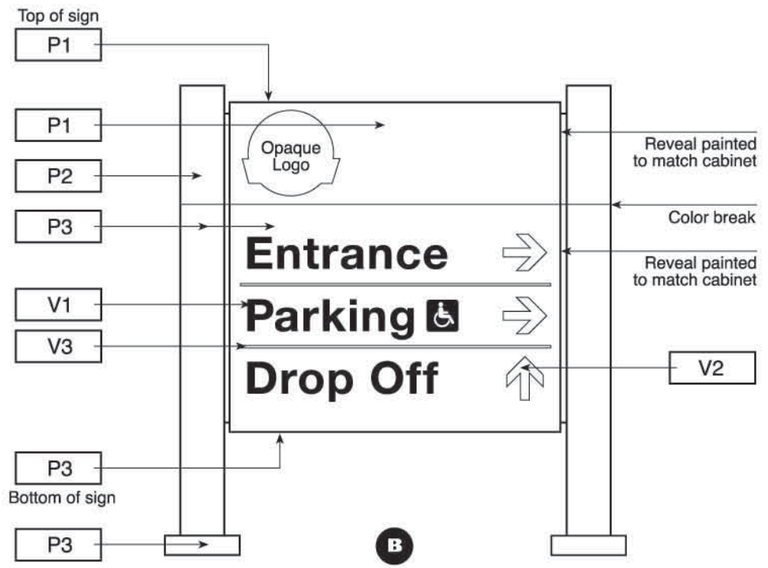

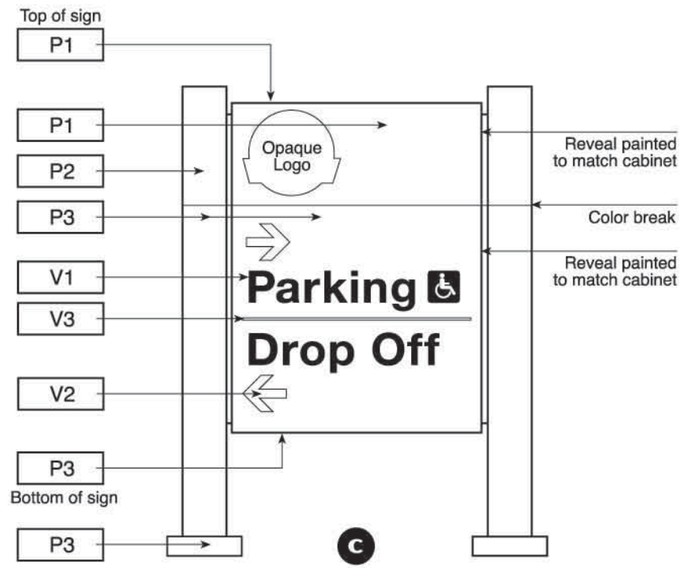

Environmental Graphics Designed by:

Bockstall Design Associates
680 Mourning Dove Circle
Lake Mary FL 32746
407.810.3442
jim@bockstalldesign.com

NOTICE: THE OFFICIAL RECORD OF THIS SHEET IS THE ELECTRONIC FILE SIGNED AND SEALED UNDER RULE 61G10-11.011, F.A.C.

REVISIONS					
DATE	BY	DESCRIPTION	DATE	BY	DESCRIPTION

Christina E. Hite, RLA #1340
DIX.HITE + PARTNERS
150 W. JESSUP AVENUE
LONGWOOD, FLORIDA
TEL 407.667.1777
FAX 407.667.1779
Certificate of Authorization No. LC0000358

STATE OF FLORIDA
DEPARTMENT OF TRANSPORTATION

ROAD NO.	COUNTY	FINANCIAL PROJECT ID
CFRC P2S	VARIOUS	423446-9-52-01

CENTRAL FLORIDA COMMUTER RAIL TRANSIT (CFCRT) PHASE 2 SOUTH

COLOR SCHEDULE

SHEET NO.
249

DRAWING NO.
W20.803

Legend

Vinyl Color V1
Acrylic Color A1
Paint Color P1

Q

P3

TUPPERWARE STATION

White Text w/Black Braille

V1
V5
V2
V3
V5

P

V5
V5
TAP HERE
V1
P3

Top of sign
P1
P1
P2
Reveal painted to match cabinet
Color break
P3
P3
Bottom of sign
Trains
V1
P3

E

Top of sign
P1
P2
Color break
Reveal painted to match cabinet
P3
Bottom of sign
P3
Northbound ↑
Southbound →
P1
P3
V3
V2
V1

F

Top of sign
P3
A1
P3
P3
Reveal painted to match cabinet
P3
Bottom of sign
P3
On Platform & In Landscape.

K

Back of sign
P1
P1
Opaque Logo
P3
V2
V3
P3
Back of sign
P3

M

Environmental Graphics Designed by:

Bockstall Design Associates
680 Mourning Dove Circle
Lake Mary FL 32746
407.810.3442
jim@bockstalldesign.com

NOTICE: THE OFFICIAL RECORD OF THIS SHEET IS THE ELECTRONIC FILE SIGNED AND SEALED UNDER RULE 61G10-11.011, F.A.C.

REVISIONS					
DATE	BY	DESCRIPTION	DATE	BY	DESCRIPTION

Christina E. Hite, RLA #1340
DIX.HITE + PARTNERS
150 W. JESSUP AVENUE
LONGWOOD, FLORIDA
TEL 407.667.1777
FAX 407.667.1779
Certificate of Authorization No. LC0000358

STATE OF FLORIDA
DEPARTMENT OF TRANSPORTATION

ROAD NO.	COUNTY	FINANCIAL PROJECT ID
CFRC P2S	VARIOUS	423446-9-52-01

CENTRAL FLORIDA COMMUTER RAIL TRANSIT (CFCRT) PHASE 2 SOUTH

COLOR SCHEDULE

SHEET NO.
250

DRAWING NO.
W20.804

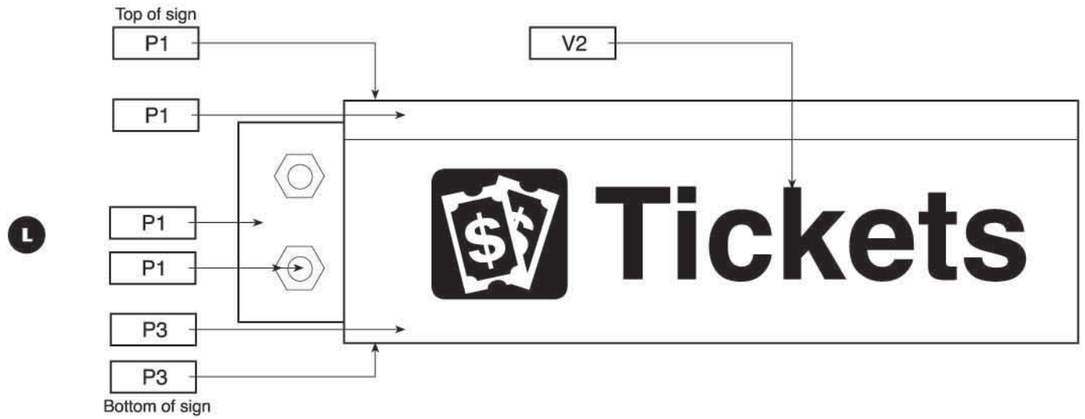

L

Legend

Vinyl Color V1

Acrylic Color A1

Paint Color P1

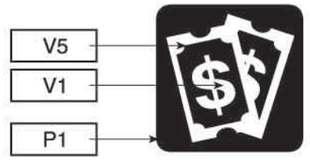

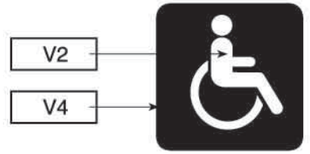

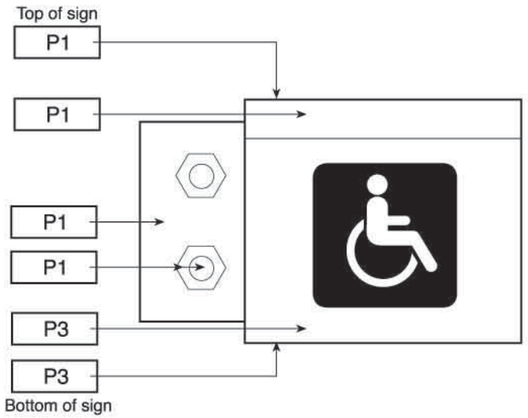

N

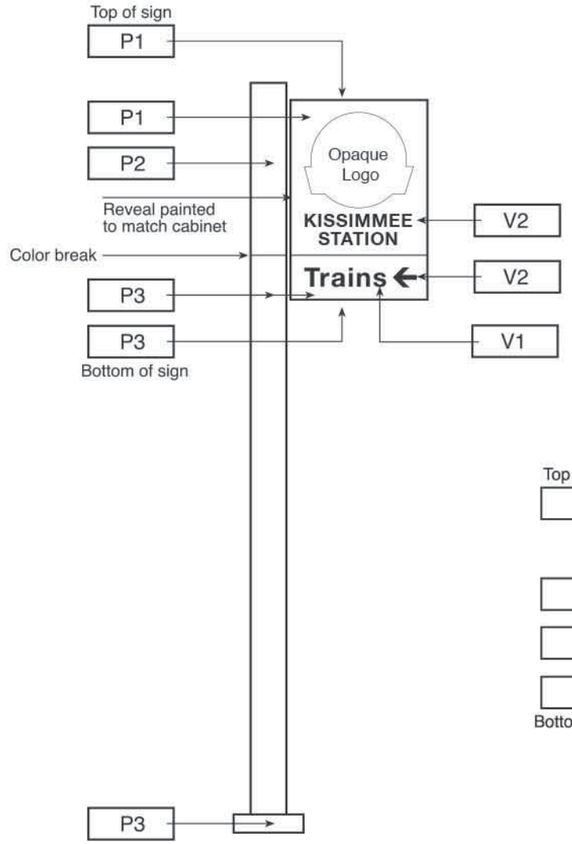

A-2

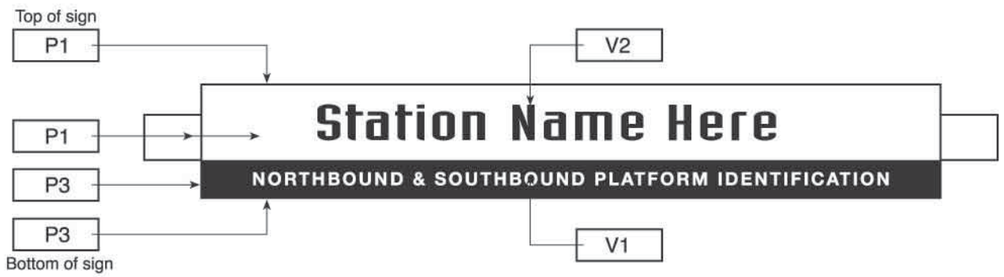

I

Environmental Graphics Designed by:

Bockstall Design Associates
680 Mourning Dove Circle
Lake Mary FL 32746
407.810.3442
jim@bockstalldesign.com

REVISIONS					
DATE	BY	DESCRIPTION	DATE	BY	DESCRIPTION

Christina E. Hite, RLA #1340
DIX.HITE + PARTNERS
150 W. JESSUP AVENUE
LONGWOOD, FLORIDA
TEL 407.667.1777
FAX 407.667.1779
Certificate of Authorization No. LC0000358

STATE OF FLORIDA
DEPARTMENT OF TRANSPORTATION

ROAD NO.	COUNTY	FINANCIAL PROJECT ID
CFRC P2S	VARIOUS	423446-9-52-01

CENTRAL FLORIDA COMMUTER RAIL TRANSIT (CFCRT) PHASE 2 SOUTH

COLOR SCHEDULE

SHEET NO. 251

NOTICE: THE OFFICIAL RECORD OF THIS SHEET IS THE ELECTRONIC FILE SIGNED AND SEALED UNDER RULE 61G10-11.011, F.A.C.

DRAWING NO.
M00.004

CIRCUIT IDENTIFIER	DEVICE	FROM	TO	BY WAY OF (VIA)	CONDUIT DETAILS SIZE	CONDUIT DETAILS TYPE	CABLE DETAILS NO. - SIZE	NOTES
F0-01	SYS MAIN	ROW PULL BOXES	UTILITY YARD PULLBOX	UNDERGROUND CONDUIT	2"	PVC	REFER TO DWG M00.005 FOR CABLE DETAILS	
AC-01	STA MAIN	UTILITY YARD POWER SOURCE	UTILITY YARD CEC SUB PANEL COMM-A	UNDERGROUND CONDUIT	2"	PVC	REFER TO DWGS E14.001, E15.001, E16.001 AND E17.001 FOR CABLE DETAILS	
AC-02	PLA MAIN	UTILITY YARD CEC	STATION PLATFORM CCB CABINET	UNDERGROUND CONDUIT	2"	PVC	REFER TO DWGS E14.001, E15.001, E16.001 AND E17.001 FOR CABLE DETAILS	
AC-03	VMS	RISER JB	VMS POWER JUNCTION BOX	DEVICE CONDUIT	1"	IMC	REFER TO DWGS E14.001, E15.001, E16.001 AND E17.001 FOR CABLE DETAILS	CONDUIT LABEL P3A, P3B ON ELECTRICAL DRAWINGS
AC-04	VMS	VMS POWER JUNCTION BOX	VMS DEVICE	DEVICE CONDUIT	1-1/4"	FLEX	REFER TO DWGS E14.001, E15.001, E16.001 AND E17.001 FOR CABLE DETAILS	
AC-05	ECB/PAT	PLATFORM CCB	ECB & PAT JUNCTION BOX/RISER	UNDERGROUND CONDUIT	N/A	PVC	REFER TO DWGS E14.001, E15.001, E16.001 AND E17.001 FOR CABLE DETAILS	CONDUIT LABEL P5A, P5B ON ELECTRICAL DRAWINGS
DA-01	PA	UTILITY YARD CEC	STATION PLATFORM CCB CABINET	UNDERGROUND CONDUIT	2"	PVC	12ST SM FIBER OPTIC	
DA-02	VMS	RISER JB	VMS JUNCTION BOX	DEVICE CONDUIT	1"	ARC	CAT-6 CABLE	CONDUIT LABEL C3A, C3B ON ELECTRICAL DRAWINGS
DA-03	VMS	VMS JUNCTION BOX	VMS DEVICE	DEVICE CONDUIT	1-1/4"	FLEX	CAT-6 CABLE	
DA-04	CCTV	RISER JB	CCTV JUNCTION BOX	DEVICE CONDUIT	1"	IMC	CAT 6 CABLE & 2/C #18 AWG	CONDUIT LABEL C2A, C2B ON ELECTRICAL DRAWINGS
DA-05	CCTV	CCTV JUNCTION BOX	CCTV DEVICE	DEVICE CONDUIT	1-1/4"	FLEX	CAT 6 CABLE & 2/C #18 AWG	
DA-06	PA	RISER JB	PA / ANS DEVICE	DEVICE CONDUIT	1-1/4"	IMC	(2) 2/C #18 AWG	
DA-07	PA	RISER JB	PA JUNCTION BOX	DEVICE CONDUIT	1"	IMC	2/C #18 AWG	CONDUIT LABEL C4A, C4B ON ELECTRICAL DRAWINGS
DA-08	PA	PA JUNCTION BOX	PA DEVICE	DEVICE CONDUIT	1-1/4"	FLEX	2/C #18 AWG	
DA-09	ANS	ANS JB	ANS DEVICE	DEVICE CONDUIT	1"	IMC	2/C #18 AWG	CONDUIT LABEL C4A, C4B ON ELECTRICAL DRAWINGS
DA-10	TRIGGER	PEDESTRIAN CROSSING NOTIFICATION DATA	PLATFORM CCB	STATION YARD CABLE	N/A	PVC	12/C #22 AWG	DIRECT BURIAL CABLE FOR COMMS TRAIN APPROACH TRIGGERING CIRCUITS
DA-11	PA	UTILITY YARD CEC	STATION PLATFORM CCB CABINET	UNDERGROUND CONDUIT	2"	PVC	(2) - 2/C #18 AWG	

NOTICE: THE OFFICIAL RECORD OF THIS SHEET IS THE ELECTRONIC FILE SIGNED AND SEALED UNDER RULE 61G15-23.003, F.A.C.

REVISIONS

DATE	BY	DESCRIPTION	DATE	BY	DESCRIPTION

SYSTRA Engineering, Inc.
520 EIGHTH AVENUE,SUITE 2100
NEW YORK, NY 10018
T. (212) 494-9111 F. (212) 494-9112
Certificate of Authorization No. 6209

STEVE YAZBEK PE NO. 79153

www.systraconsulting.com

STATE OF FLORIDA
DEPARTMENT OF TRANSPORTATION

ROAD NO.	COUNTY	FINANCIAL PROJECT ID
CFRC P2S	VARIOUS	423446-9-52-01

CENTRAL FLORIDA COMMUTER RAIL TRANSIT (CFCRT) PHASE 2 SOUTH

COMMUNICATIONS CONDUIT & CABLE SCHEDULE

SHEET NO.
252

$USER$ $DATE$ $TIME$ $FILE$

DRAWING NO.
M00.005

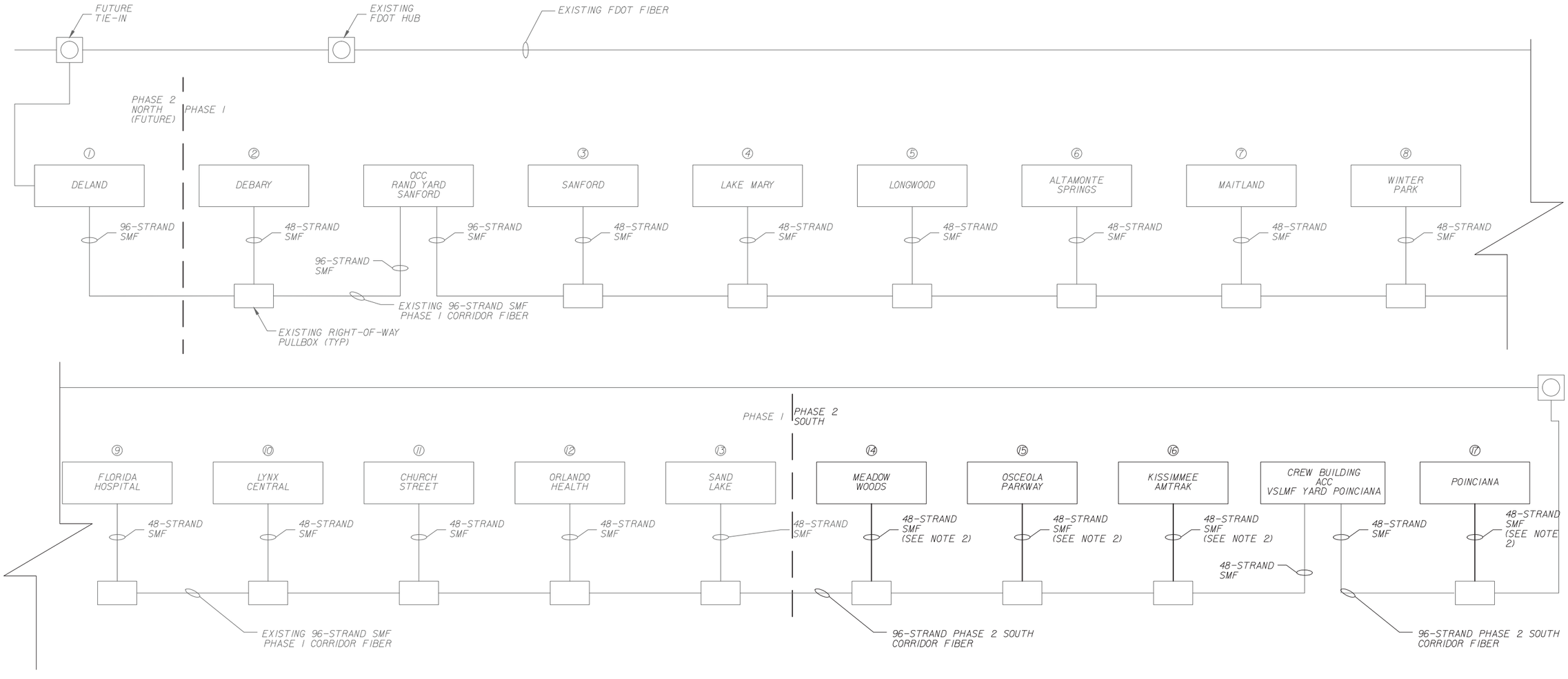

NOTES:

1. FOR GENERAL NOTES AND ABBREVIATIONS SEE DRAWINGS C00.002G, AND C00.006A, C00.006B, C00.007A, C00.007B, C00.007C.
2. PROVIDE AND INSTALL 48-STRAND SMF BETWEEN UTILITY YARD AND RIGHT OF WAY PULLBOX.
3. SEE DRAWING M20.701 THRU M20.708 FOR STATION ELECTRONICS DETAILS.
4. SEE DRAWING M20.701 THRU M20.711 FOR CABLE AND CONNECTION DETAILS.

NOTICE: THE OFFICIAL RECORD OF THIS SHEET IS THE ELECTRONIC FILE SIGNED AND SEALED UNDER RULE 61G15-23.003, F.A.C.

REVISIONS					
DATE	BY	DESCRIPTION	DATE	BY	DESCRIPTION

SYSTRA Engineering, Inc.
520 EIGHTH AVENUE,SUITE 2100
NEW YORK, NY 10018
T. (212) 494-9111 F. (212) 494-9112
Certificate of Authorization No. 6209
STEVE YAZBEK PE NO. 79153
www.systraconsulting.com

STATE OF FLORIDA
DEPARTMENT OF TRANSPORTATION

ROAD NO.	COUNTY	FINANCIAL PROJECT ID
CFRC P2S	VARIOUS	423446-9-52-01

CENTRAL FLORIDA COMMUTER RAIL TRANSIT (CFCRT) PHASE 2 SOUTH

NETWORK BLOCK DIAGRAM

SHEET NO. 253

$USER$ $DATE$ $TIME$ $FILE$

DRAWING NO.
M20.701

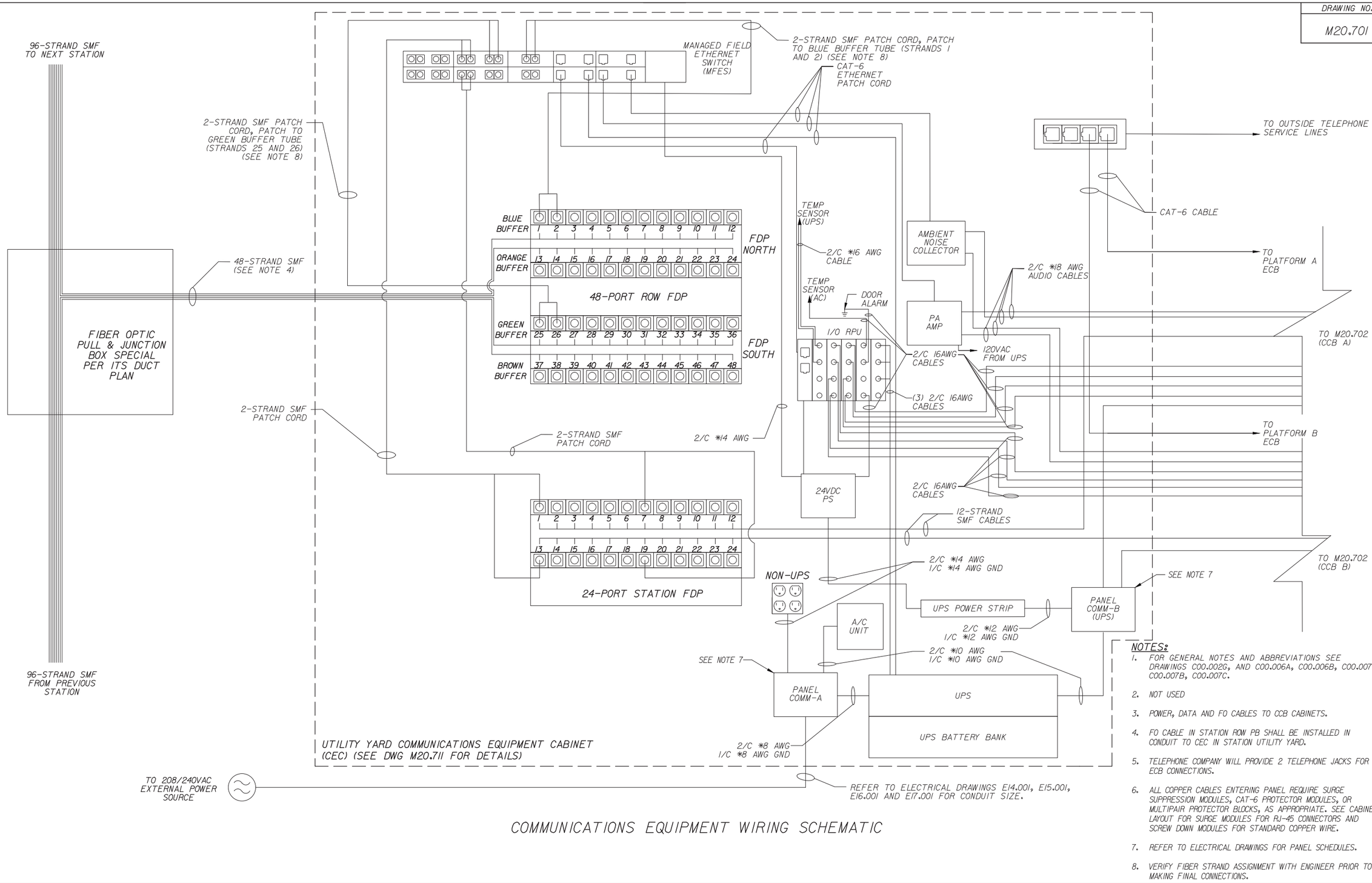

COMMUNICATIONS EQUIPMENT WIRING SCHEMATIC

NOTES:

1. FOR GENERAL NOTES AND ABBREVIATIONS SEE DRAWINGS C00.002G, AND C00.006A, C00.006B, C00.007A, C00.007B, C00.007C.
2. NOT USED
3. POWER, DATA AND FO CABLES TO CCB CABINETS.
4. FO CABLE IN STATION ROW PB SHALL BE INSTALLED IN CONDUIT TO CEC IN STATION UTILITY YARD.
5. TELEPHONE COMPANY WILL PROVIDE 2 TELEPHONE JACKS FOR ECB CONNECTIONS.
6. ALL COPPER CABLES ENTERING PANEL REQUIRE SURGE SUPPRESSION MODULES, CAT-6 PROTECTOR MODULES, OR MULTIPAIR PROTECTOR BLOCKS, AS APPROPRIATE. SEE CABINET LAYOUT FOR SURGE MODULES FOR RJ-45 CONNECTORS AND SCREW DOWN MODULES FOR STANDARD COPPER WIRE.
7. REFER TO ELECTRICAL DRAWINGS FOR PANEL SCHEDULES.
8. VERIFY FIBER STRAND ASSIGNMENT WITH ENGINEER PRIOR TO MAKING FINAL CONNECTIONS.

NOTICE: THE OFFICIAL RECORD OF THIS SHEET IS THE ELECTRONIC FILE SIGNED AND SEALED UNDER RULE 61G15-23.003, F.A.C.

REVISIONS					
DATE	BY	DESCRIPTION	DATE	BY	DESCRIPTION

SYSTRA Engineering, Inc.
520 EIGHTH AVENUE,SUITE 2100
NEW YORK, NY 10018
T. (212) 494-9111 F. (212) 494-9112
Certificate of Authorization No. 6209
STEVE YAZBEK PE NO. 79153
www.systraconsulting.com

STATE OF FLORIDA
DEPARTMENT OF TRANSPORTATION

ROAD NO.	COUNTY	FINANCIAL PROJECT ID
CFRC P2S	VARIOUS	423446-9-52-01

CENTRAL FLORIDA COMMUTER RAIL TRANSIT (CFCRT) PHASE 2 SOUTH

TYPICAL STATION ELECTRONICS DETAILS 1 OF 3

SHEET NO. 254

$USER$ $DATE$ $TIME$ $FILE$

DRAWING NO.
M20.702

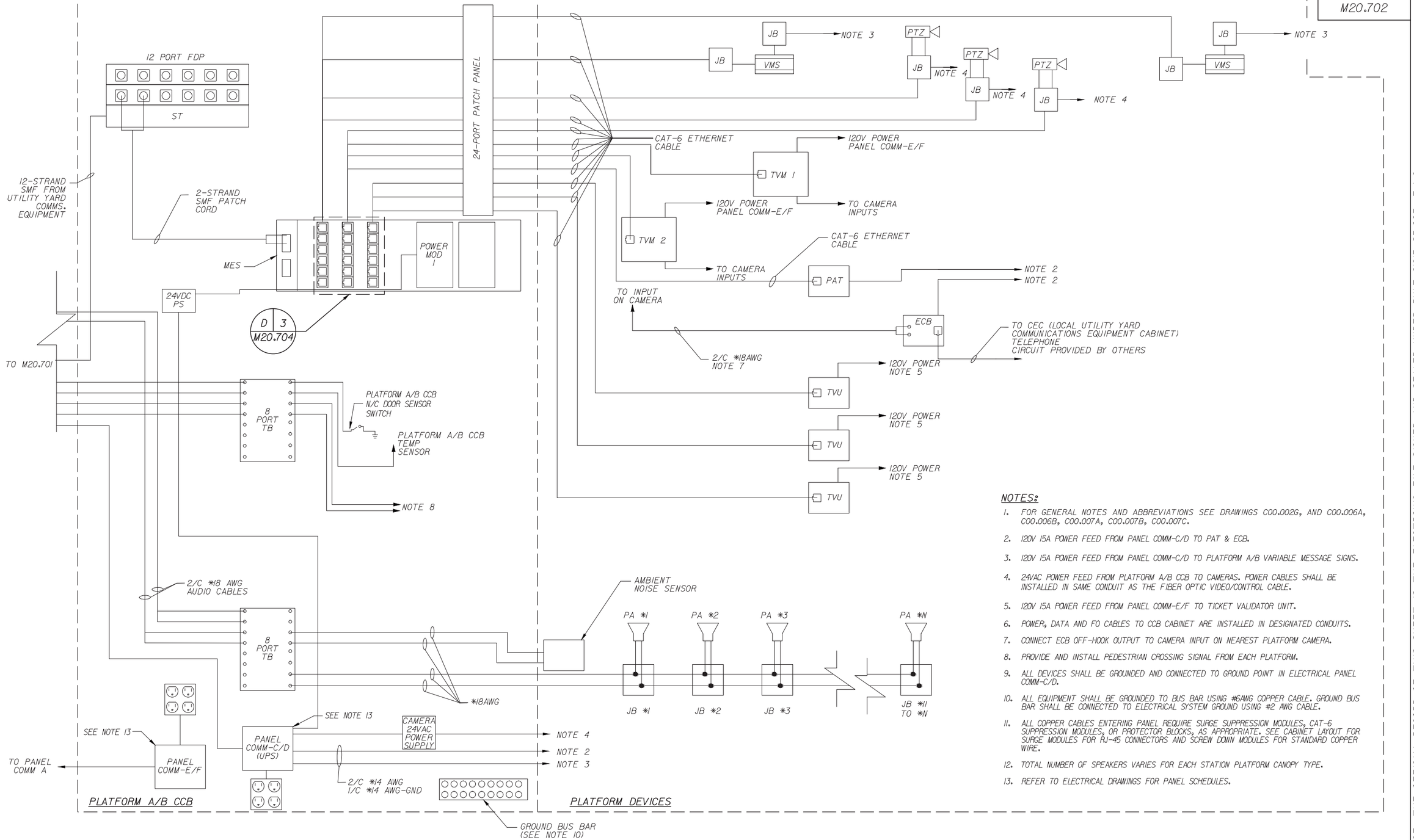

COMMUNICATIONS EQUIPMENT WIRING SCHEMATIC

NOTES:

1. FOR GENERAL NOTES AND ABBREVIATIONS SEE DRAWINGS C00.002G, AND C00.006A, C00.006B, C00.007A, C00.007B, C00.007C.
2. 120V 15A POWER FEED FROM PANEL COMM-C/D TO PAT & ECB.
3. 120V 15A POWER FEED FROM PANEL COMM-C/D TO PLATFORM A/B VARIABLE MESSAGE SIGNS.
4. 24VAC POWER FEED FROM PLATFORM A/B CCB TO CAMERAS. POWER CABLES SHALL BE INSTALLED IN SAME CONDUIT AS THE FIBER OPTIC VIDEO/CONTROL CABLE.
5. 120V 15A POWER FEED FROM PANEL COMM-E/F TO TICKET VALIDATOR UNIT.
6. POWER, DATA AND FO CABLES TO CCB CABINET ARE INSTALLED IN DESIGNATED CONDUITS.
7. CONNECT ECB OFF-HOOK OUTPUT TO CAMERA INPUT ON NEAREST PLATFORM CAMERA.
8. PROVIDE AND INSTALL PEDESTRIAN CROSSING SIGNAL FROM EACH PLATFORM.
9. ALL DEVICES SHALL BE GROUNDED AND CONNECTED TO GROUND POINT IN ELECTRICAL PANEL COMM-C/D.
10. ALL EQUIPMENT SHALL BE GROUNDED TO BUS BAR USING #6AWG COPPER CABLE. GROUND BUS BAR SHALL BE CONNECTED TO ELECTRICAL SYSTEM GROUND USING #2 AWG CABLE.
11. ALL COPPER CABLES ENTERING PANEL REQUIRE SURGE SUPPRESSION MODULES, CAT-6 SUPPRESSION MODULES, OR PROTECTOR BLOCKS, AS APPROPRIATE. SEE CABINET LAYOUT FOR SURGE MODULES FOR RJ-45 CONNECTORS AND SCREW DOWN MODULES FOR STANDARD COPPER WIRE.
12. TOTAL NUMBER OF SPEAKERS VARIES FOR EACH STATION PLATFORM CANOPY TYPE.
13. REFER TO ELECTRICAL DRAWINGS FOR PANEL SCHEDULES.

NOTICE: THE OFFICIAL RECORD OF THIS SHEET IS THE ELECTRONIC FILE SIGNED AND SEALED UNDER RULE 61G15-23.003, F.A.C.

REVISIONS					
DATE	BY	DESCRIPTION	DATE	BY	DESCRIPTION

SYSTRA Engineering, Inc.
520 EIGHTH AVENUE,SUITE 2100
NEW YORK, NY 10018
T. (212) 494-9111 F. (212) 494-9112
Certificate of Authorization No. 6209
STEVE YAZBEK PE NO. 79153
www.systraconsulting.com

STATE OF FLORIDA
DEPARTMENT OF TRANSPORTATION

ROAD NO.	COUNTY	FINANCIAL PROJECT ID
CFRC P2S	VARIOUS	423446-9-52-01

CENTRAL FLORIDA COMMUTER RAIL TRANSIT (CFCRT) PHASE 2 SOUTH

TYPICAL STATION ELECTRONICS DETAILS 2 OF 3

SHEET NO.
255

$USER$ $DATE$ $TIME$ $FILE$

DRAWING NO.
M20.704

TOP VIEW

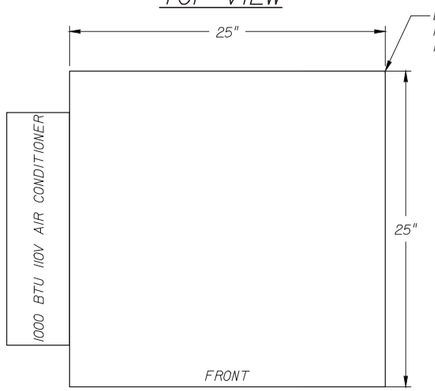

SIDE VIEW

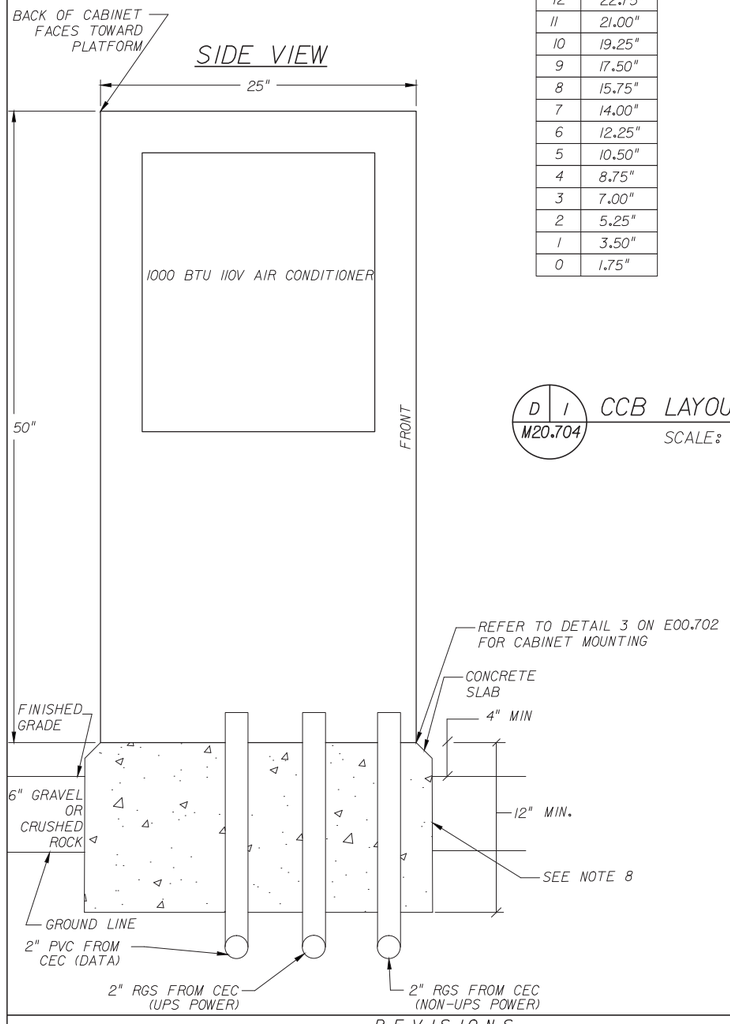

RU	HEIGHT
26	47.25"
25	45.50"
24	43.75"
23	42.00"
22	40.25"
21	38.50"
20	36.75"
19	35.00"
18	33.25"
17	31.50"
16	29.75"
15	28.00"
14	26.25"
13	24.50"
12	22.75"
11	21.00"
10	19.25"
9	17.50"
8	15.75"
7	14.00"
6	12.25"
5	10.50"
4	8.75"
3	7.00"
2	5.25"
1	3.50"
0	1.75"

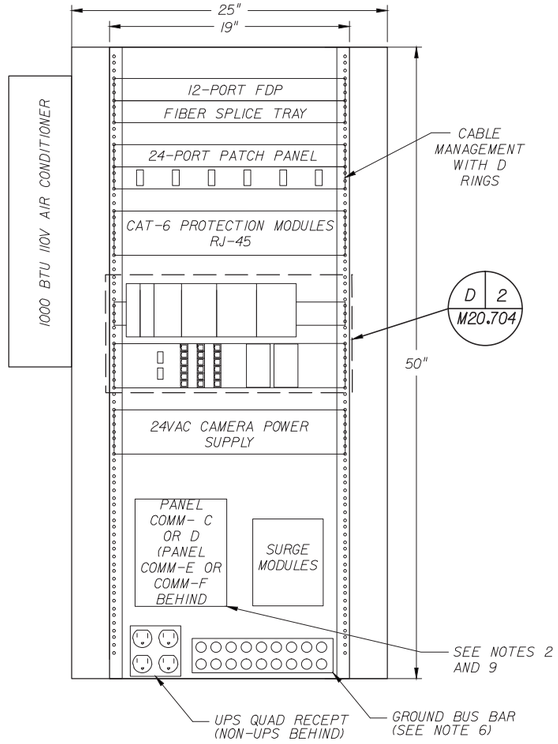

D 1 M20.704 **CCB LAYOUT DETAILS**
SCALE: 1" * 1'-0"

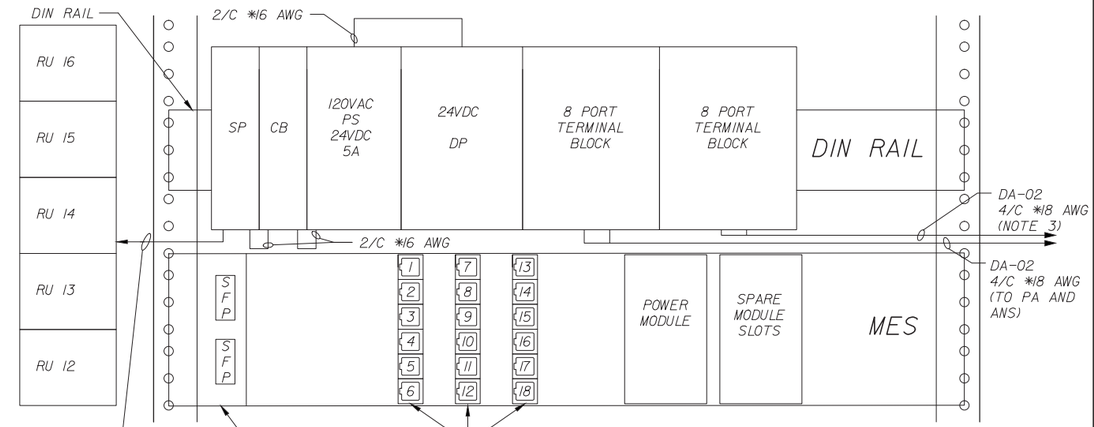

D 2 M20.704 **CCB DETAILS**

1.	VMS 1
2.	PTZ 1
3.	PTZ 2
4.	PTZ 3
5.	VMS 2
6.	SPARE
7.	TVM 1
8.	TVM 2
9.	TVU 1
10.	TVU 2
11.	TVU 3
12.	SPARE
13.	PAT
14.	SPARE
15.	SPARE
16.	SPARE
17.	SPARE
18.	SPARE

D 3 M20.704 **MES PORT SCHEDULE**

NOTES:

1. FOR GENERAL NOTES AND ABBREVIATIONS SEE DRAWINGS C00.002G, AND C00.006A, C00.006B, C00.007A, C00.007B, C00.007C.
2. ELECTRICAL PANEL COMM-C IS ALLOCATED FOR PLATFORM A AND PANEL COMM-D IS ALLOCATED FOR PLATFORM B.
3. PROVIDE DOOR CONTACT & TEMP ALARM TO PLATFORM CABINET PER MANUFACTURER'S DIRECTIONS.
4. PROVIDE TVSS FOR EQUIPMENT CABINET.
5. POWER SHALL BE ROUTED VIA ONE SIDE OF CABINET, AND DATA ROUTED VIA THE OTHER, TO THE EXTENT POSSIBLE.
6. ALL EQUIPMENT IN CCB SHALL BE GROUNDED TO BUS BAR USING #6AWG CABLE. GROUND BUS BAR SHALL BE CONNECTED TO ELECTRICAL SYSTEM GROUND USING #2 AWG CABLE.
7. ALL NON-RACKABLE EQUIPMENT SHALL BE MOUNTED ON RECESSED RACK MOUNTED PANELS. THE HEIGHT OF THE PANEL SHALL MATCH THE HEIGHT OF THE EQUIPMENT TO THE NEAREST RACK UNIT HEIGHT. THE DEPTH OF THE PANEL SHALL BE SUFFICIENT TO KEEP THE EQUIPMENT AND CABLE CLEARANCES FLUSH WITH THE RACK'S FACE
8. PROVIDE 3' x 6' SLAB, SLOPED TO DRAIN AWAY FROM CABINET.
9. REFER TO ELECTRICAL DRAWINGS FOR PANEL SCHEDULES.

NOTICE: THE OFFICIAL RECORD OF THIS SHEET IS THE ELECTRONIC FILE SIGNED AND SEALED UNDER RULE 61G15-23.003, F.A.C.

REVISIONS

DATE	BY	DESCRIPTION	DATE	BY	DESCRIPTION

SYSTRA Engineering, Inc.
520 EIGHTH AVENUE,SUITE 2100
NEW YORK, NY 10018
T. (212) 494-9111 F. (212) 494-9112
Certificate of Authorization No. 6209
STEVE YAZBEK PE NO. 79153
www.systraconsulting.com

STATE OF FLORIDA
DEPARTMENT OF TRANSPORTATION

ROAD NO.	COUNTY	FINANCIAL PROJECT ID
CFRC P2S	VARIOUS	423446-9-52-01

CENTRAL FLORIDA COMMUTER RAIL TRANSIT (CFCRT) PHASE 2 SOUTH

TYPICAL STATION ELECTRONICS DETAILS 3 OF 3

SHEET NO. 256

$USER$ $DATE$ $TIME$ $FILE$

DRAWING NO.

M20.709

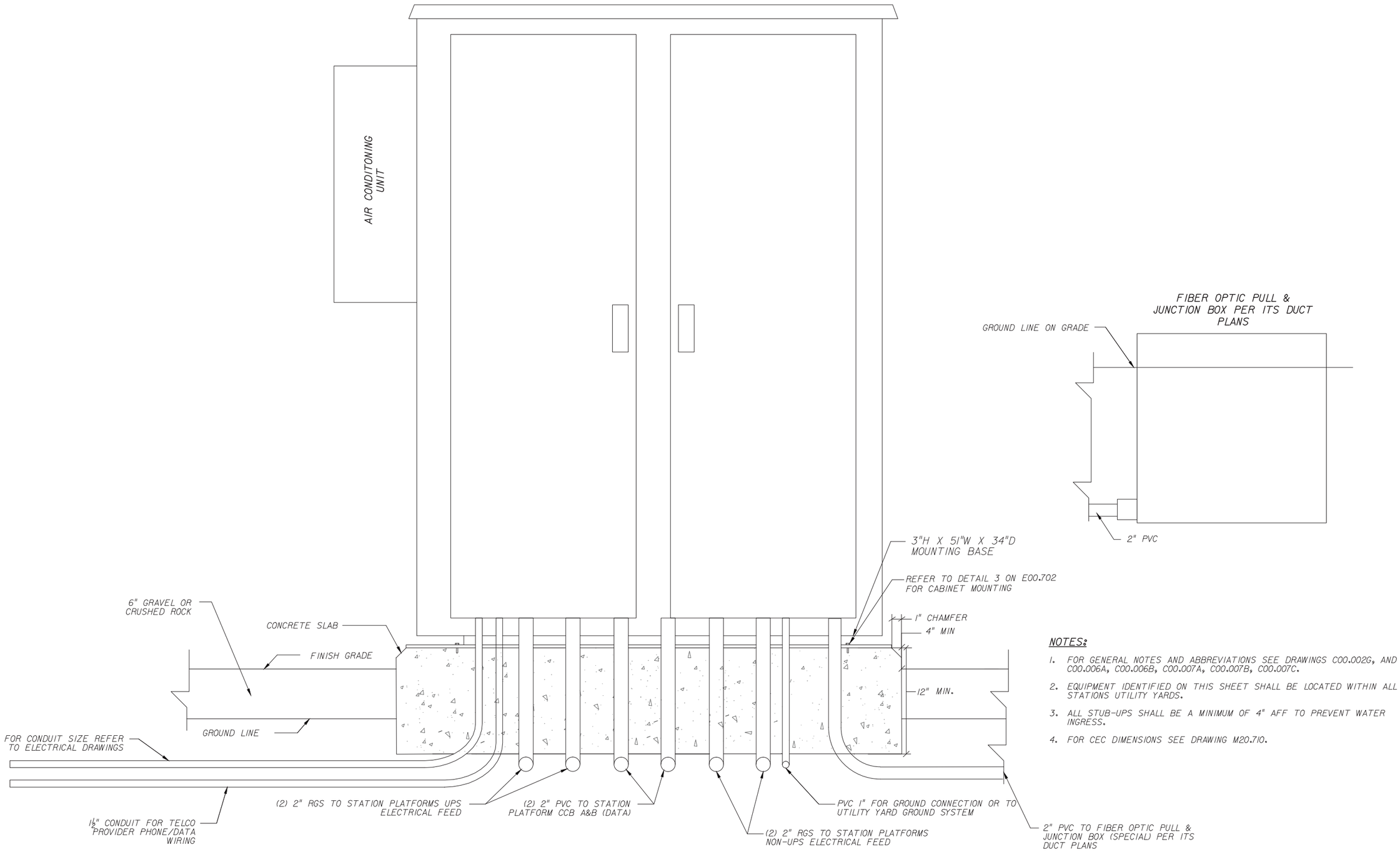

NOTES:

1. FOR GENERAL NOTES AND ABBREVIATIONS SEE DRAWINGS C00.002G, AND C00.006A, C00.006B, C00.007A, C00.007B, C00.007C.
2. EQUIPMENT IDENTIFIED ON THIS SHEET SHALL BE LOCATED WITHIN ALL STATIONS UTILITY YARDS.
3. ALL STUB-UPS SHALL BE A MINIMUM OF 4" AFF TO PREVENT WATER INGRESS.
4. FOR CEC DIMENSIONS SEE DRAWING M20.710.

NOTICE: THE OFFICIAL RECORD OF THIS SHEET IS THE ELECTRONIC FILE SIGNED AND SEALED UNDER RULE 61G15-23.003, F.A.C.

REVISIONS

DATE	BY	DESCRIPTION	DATE	BY	DESCRIPTION

SYSTRA Engineering, Inc.
520 EIGHTH AVENUE,SUITE 2100
NEW YORK, NY 10018
T. (212) 494-9111 F. (212) 494-9112
Certificate of Authorization No. 6209

STEVE YAZBEK PE NO. 79153

www.systraconsulting.com

STATE OF FLORIDA
DEPARTMENT OF TRANSPORTATION

ROAD NO.	COUNTY	FINANCIAL PROJECT ID
CFRC P2S	VARIOUS	423446-9-52-01

CENTRAL FLORIDA COMMUTER RAIL TRANSIT (CFCRT) PHASE 2 SOUTH

TYPICAL STATION UTILITY YARD CEC DETAILS

SHEET NO. 257

$USER$ $DATE$ $TIME$ $FILE$

DRAWING NO.
M20.710

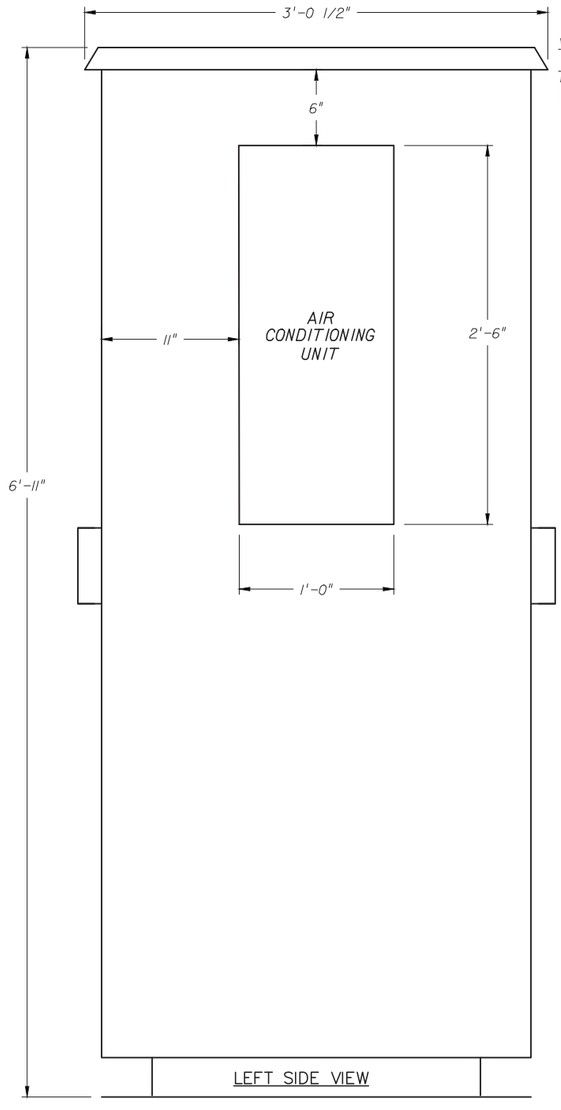

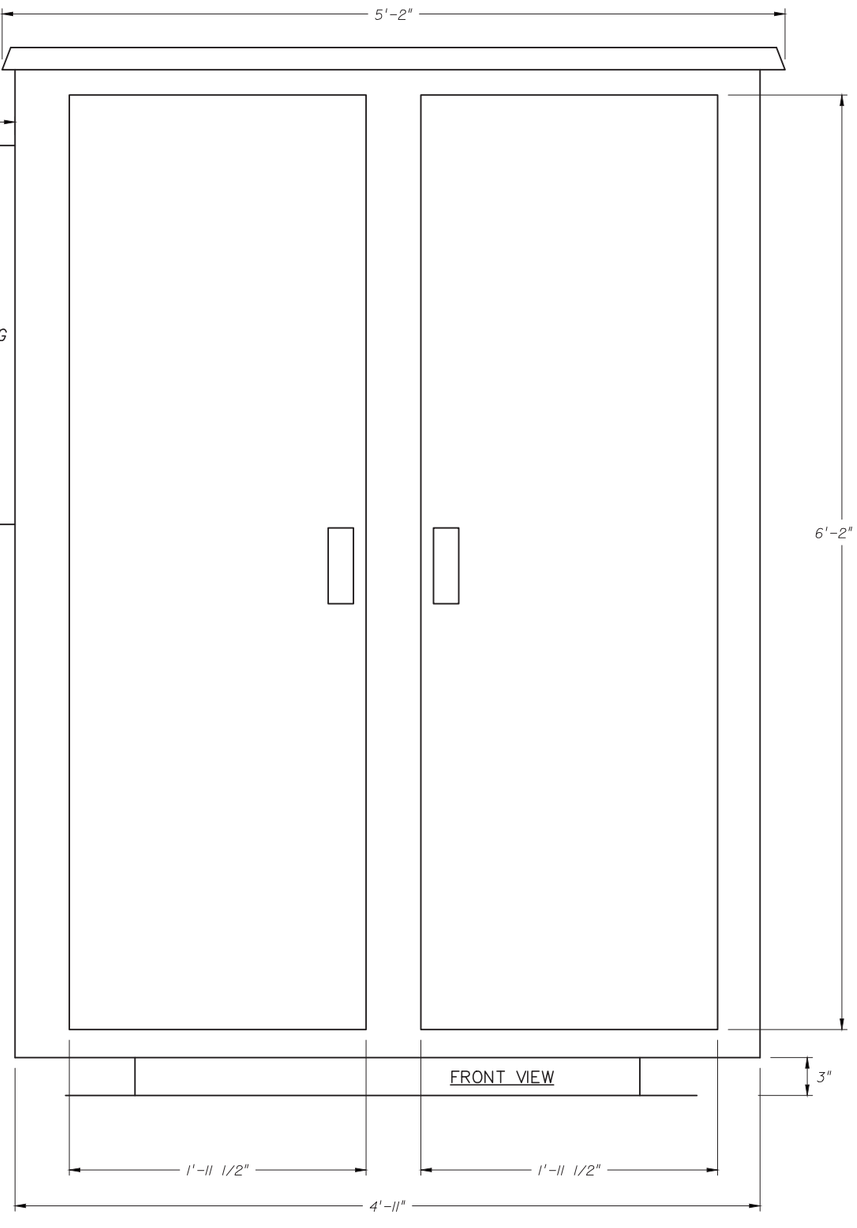

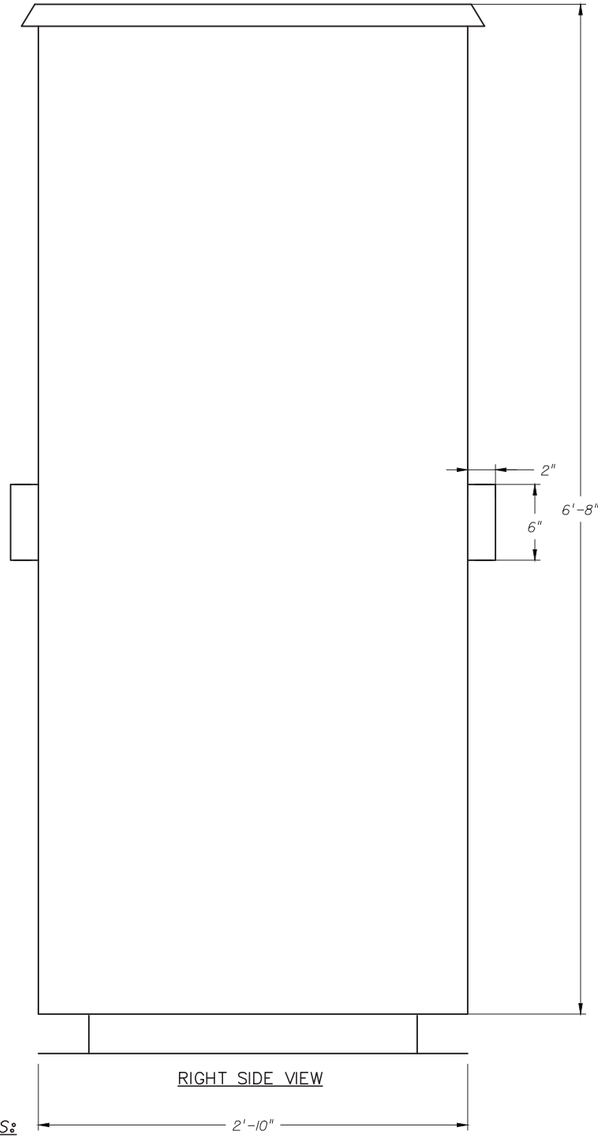

NOTES:

1. FOR GENERAL NOTES AND ABBREVIATIONS SEE DRAWINGS C00.002G, AND C00.006A, C00.006B, C00.007A, C00.007B, C00.007C.
2. SEE DRAWING M20.711 FOR ELECTRICAL PANEL SCHEDULE.
3. EQUIPMENT IDENTIFIED ON THIS SHEET SHALL BE LOCATED WITHIN ALL STATIONS UTILITY YARDS.

NOTICE: THE OFFICIAL RECORD OF THIS SHEET IS THE ELECTRONIC FILE SIGNED AND SEALED UNDER RULE 61G15-23.003, F.A.C.

REVISIONS					
DATE	BY	DESCRIPTION	DATE	BY	DESCRIPTION

SYSTRA Engineering, Inc.
520 EIGHTH AVENUE,SUITE 2100
NEW YORK, NY 10018
T. (212) 494-9111 F. (212) 494-9112
Certificate of Authorization No. 6209

STEVE YAZBEK PE NO. 79153

www.systraconsulting.com

STATE OF FLORIDA
DEPARTMENT OF TRANSPORTATION

ROAD NO.	COUNTY	FINANCIAL PROJECT ID
CFRC P2S	VARIOUS	423446-9-52-01

CENTRAL FLORIDA COMMUTER RAIL TRANSIT (CFCRT) PHASE 2 SOUTH

TYPICAL STATION DETAILS
1 OF 4

SHEET NO.
258

$USER$ $DATE$ $TIME$ $FILE$

RU	HEIGHT
42	72.25"
41	70.50"
40	68.75"
39	67.00"
38	65.25"
37	66.50"
36	64.75"
35	63.00"
34	61.25"
33	59.50"
32	57.75"
31	56.00"
30	54.25"
29	52.50"
28	50.75"
27	49.00"
26	47.25"
25	45.50"
24	43.75"
23	42.00"
22	40.25"
21	38.50"
20	36.75"
19	35.00"
18	33.25"
17	31.50"
16	29.75"
15	28.00"
14	26.25"
13	24.50"
12	22.75"
11	21.00"
10	19.25"
9	17.50"
8	15.75"
7	14.00"
6	12.25"
5	10.50"
4	8.75"
3	7.00"
2	5.25"
1	3.50"
0	1.75"

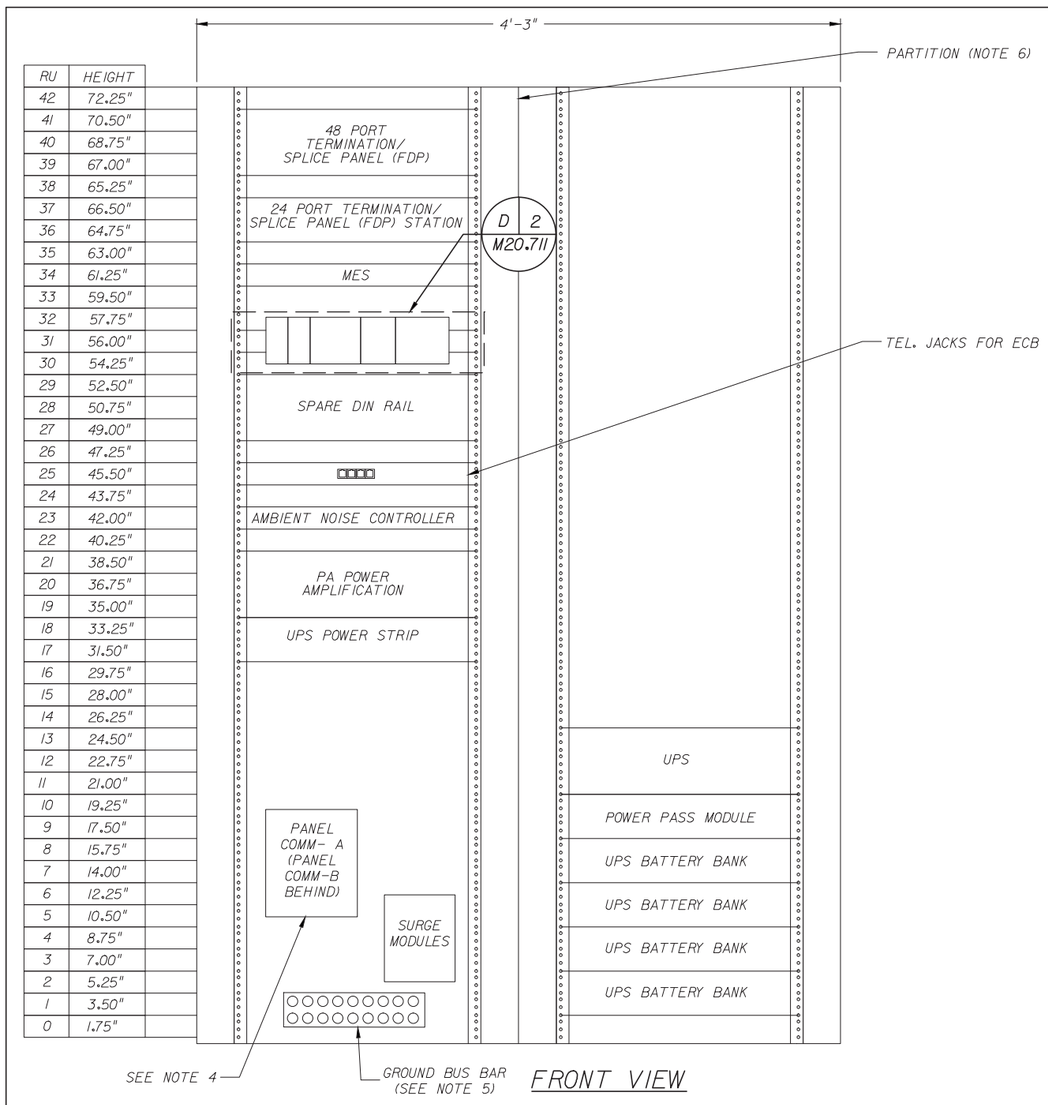

FRONT VIEW

D 1 M20.711 CEC LAYOUT

SCALE: 1" : 1'-0"

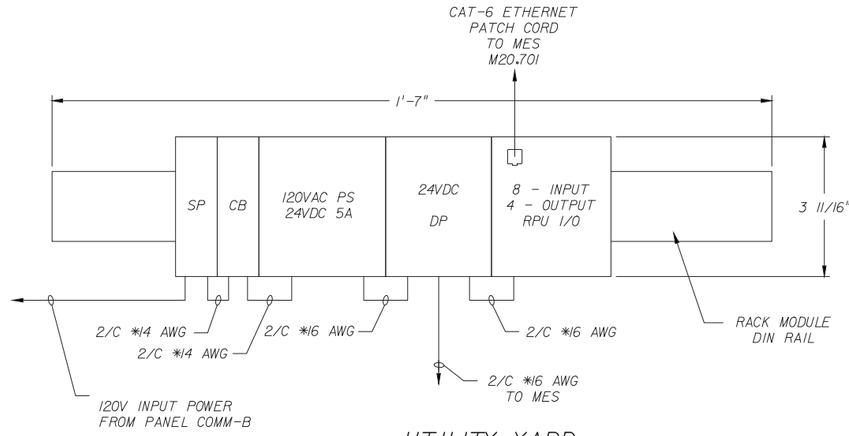

D 2 M20.711 UTILITY YARD DIN RAIL LAYOUT

SCALE: 3" : 1'-0"

NOTES:

1. FOR GENERAL NOTES AND ABBREVIATIONS SEE DRAWINGS C00.002G, AND C00.006A, C00.006B, C00.007A, C00.007B, C00.007C.
2. ELECTRICAL FEEDS TO ELECTRICAL EQUIPMENT WITHIN THE CEC SHALL BE IN LIQUID TIGHT FLEXIBLE CONDUIT.
3. EQUIPMENT IDENTIFIED ON THIS SHEET SHALL BE LOCATED WITHIN ALL STATIONS UTILITY YARDS.
4. REFER TO ELECTRICAL DRAWINGS FOR PANEL SCHEDULES.
5. ALL DEVICES SHALL BE GROUNDED TO BUS BAR USING #6AWG COPPER CABLE, GROUND BUS BAR SHALL BE CONNECTED TO ELECTRICAL SYSTEM GROUND USING #2 AWG CABLE.
6. PROVIDE PARTITIONED CEC SUCH THAT UPS BATTERY SIDE IS ISOLATED FROM AIR CONDITIONED SIDE.
7. ALL NON-RACKABLE EQUIPMENT SHALL BE MOUNTED ON RECESSED RACK MOUNTED PANELS. THE HEIGHT OF THE PANEL SHALL MATCH THE HEIGHT OF THE EQUIPMENT TO THE NEAREST RACK UNIT HEIGHT. THE DEPTH OF THE PANEL SHALL BE SUFFICIENT TO KEEP THE EQUIPMENT AND CABLE CLEARANCES FLUSH WITH THE RACK'S FACE

DRAWING NO. M20.711

NOTICE: THE OFFICIAL RECORD OF THIS SHEET IS THE ELECTRONIC FILE SIGNED AND SEALED UNDER RULE 61G15-23.003, F.A.C.

REVISIONS

DATE	BY	DESCRIPTION	DATE	BY	DESCRIPTION

SYSTRA Engineering, Inc.
520 EIGHTH AVENUE,SUITE 2100
NEW YORK, NY 10018
T. (212) 494-9111 F. (212) 494-9112
Certificate of Authorization No. 6209
STEVE YAZBEK PE NO. 79153
www.systraconsulting.com

STATE OF FLORIDA
DEPARTMENT OF TRANSPORTATION

ROAD NO.	COUNTY	FINANCIAL PROJECT ID
CFRC P2S	VARIOUS	423446-9-52-01

CENTRAL FLORIDA COMMUTER RAIL TRANSIT (CFCRT) PHASE 2 SOUTH

TYPICAL STATION DETAILS 2 OF 4

SHEET NO. 259

$USER$ $DATE$ $TIME$ $FILE$

DRAWING NO.
M20.712

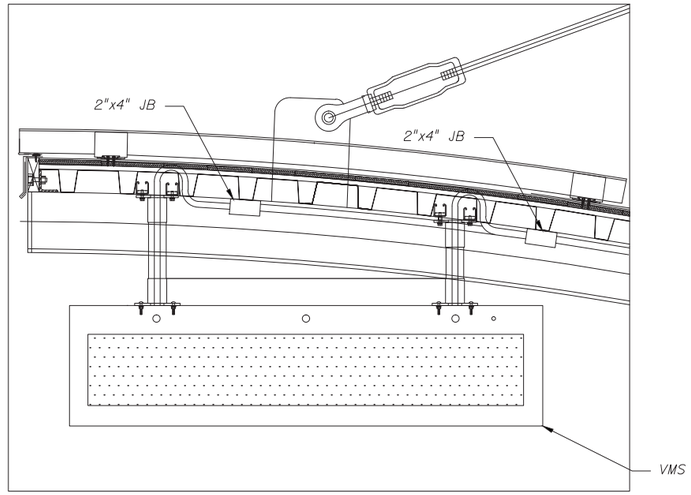

D | 1 / M20.712

VMS MOUNTING DETAIL CANOPY "A"

NTS

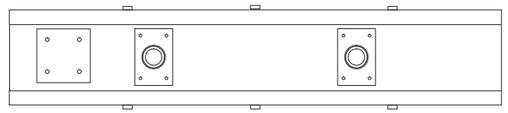

TOP VIEW

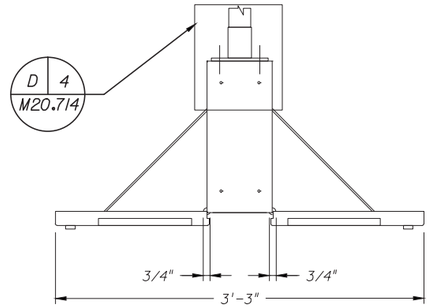

SECTION A-A

SHOWN WITH DOOR HINGED OPEN FOR SERVICE

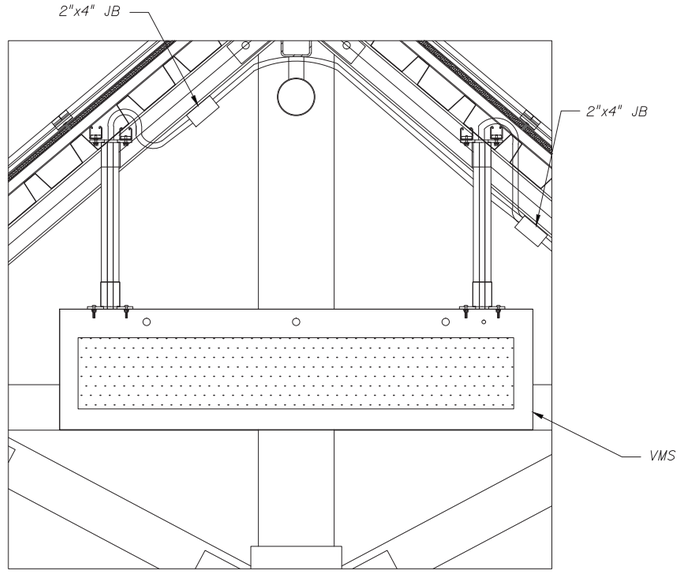

D | 3 / M20.712

VMS MOUNTING DETAIL CANOPY "F"

NTS

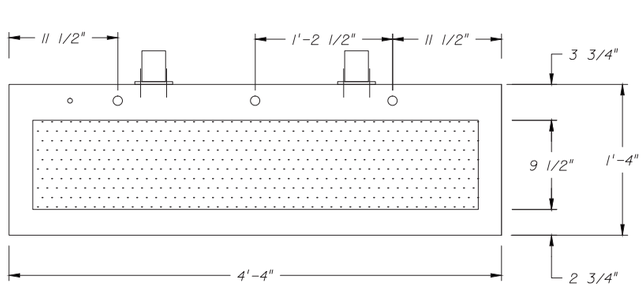

FRONT VIEW

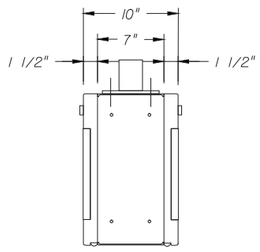

RIGHT SIDE VIEW

D | 2 / M20.712

VMS DETAILS

NTS

NOTES:

1. FOR GENERAL NOTES AND ABBREVIATIONS SEE DRAWINGS C00.002G, AND C00.006A, C00.006B, C00.007A, C00.007B, C00.007C.
2. FASTEN MOUNTING SHOE TO VMS WITH 4 1/4"-20 X 1-1/2" STAINLESS STEEL MACHINE SCREW AND STAINLESS STEEL NUT WITH WASHER AND LOCK WASHER. FOR MOUNTING SHOE DETAILS SEE DRAWING M20.714.
3. PIPE SHALL BE PAINTED COLOR TO MATCH VMS FINISH. PIPE LENGTH SHALL BE DETERMINED BY CONTRACTOR TO ALLOW FOR PROPER VMS HEIGHT CLEARANCES.
4. DISTANCE OF MOUNTING SHOE FROM CABINET ENDS SHALL BE DETERMINED BY CONTRACTOR FOR BEST FIT FOR THE VARIOUS CANOPY TYPES.
5. ALL JUNCTION BOXES SHALL BE SECURELY MOUNTED TO UNDERSIDE OF CANOPY. ALL JUNCTION BOXES, CONDUITS, AND PENETRATIONS SHALL BE GASKETED AND WATER TIGHT.

NOTICE: THE OFFICIAL RECORD OF THIS SHEET IS THE ELECTRONIC FILE SIGNED AND SEALED UNDER RULE 61G15-23.003, F.A.C.

REVISIONS					
DATE	BY	DESCRIPTION	DATE	BY	DESCRIPTION

SYSTRA Engineering, Inc.
520 EIGHTH AVENUE,SUITE 2100
NEW YORK, NY 10018
T. (212) 494-9111 F. (212) 494-9112
Certificate of Authorization No. 6209

STEVE YAZBEK PE NO. 79153

www.systraconsulting.com

STATE OF FLORIDA
DEPARTMENT OF TRANSPORTATION

ROAD NO.	COUNTY	FINANCIAL PROJECT ID
CFRC P2S	VARIOUS	423446-9-52-01

CENTRAL FLORIDA COMMUTER RAIL TRANSIT (CFCRT) PHASE 2 SOUTH

TYPICAL STATION DETAILS
3 OF 4

SHEET NO.
260

$USER$ $DATE$ $TIME$ $FILE$

DRAWING NO.
M20.713

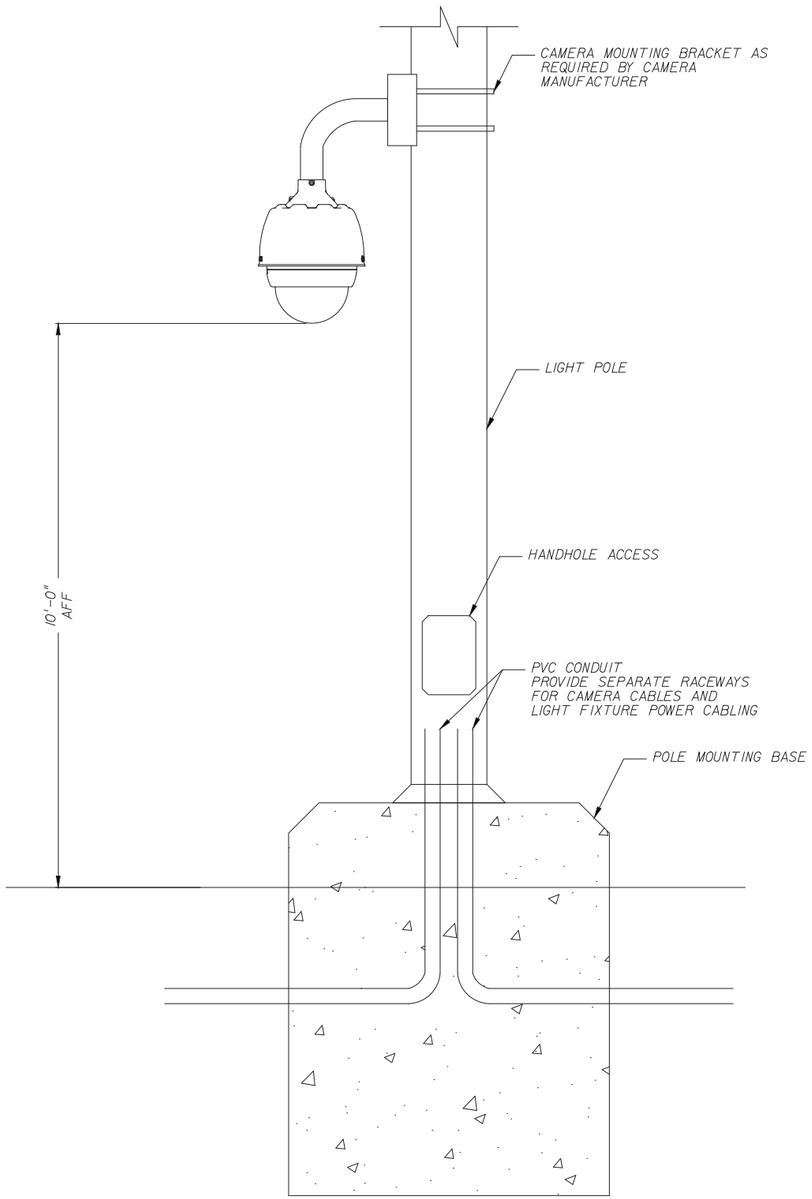

D 1 / M20.713 LIGHT POLE MOUNTED CAMERA INSTALLATION DETAIL
NTS

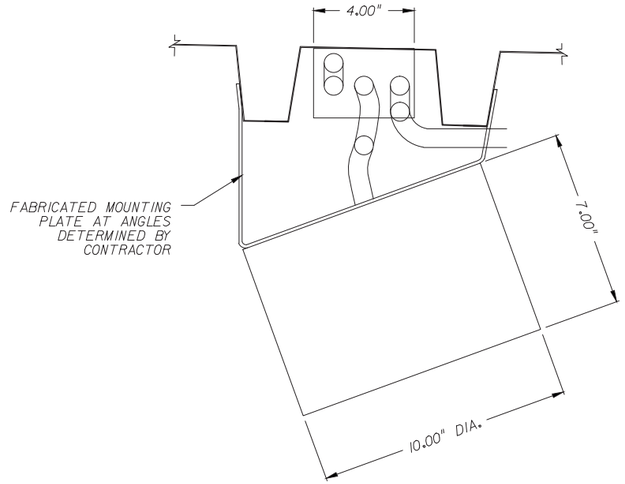

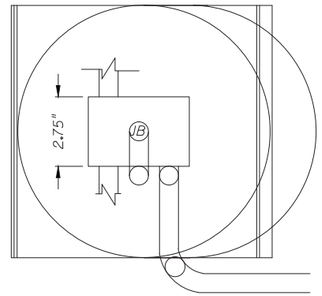

D 2 / M20.713 PA SPEAKER WIRING DIAGRAM (TYP)
NTS

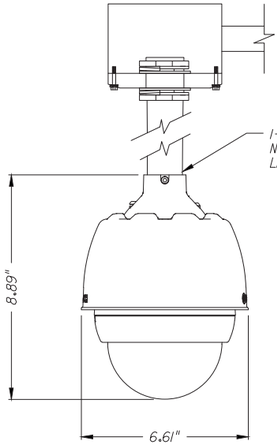

FRONT VIEW

D 3 / M20.713 CCTV TYPICAL DETAILS
NTS

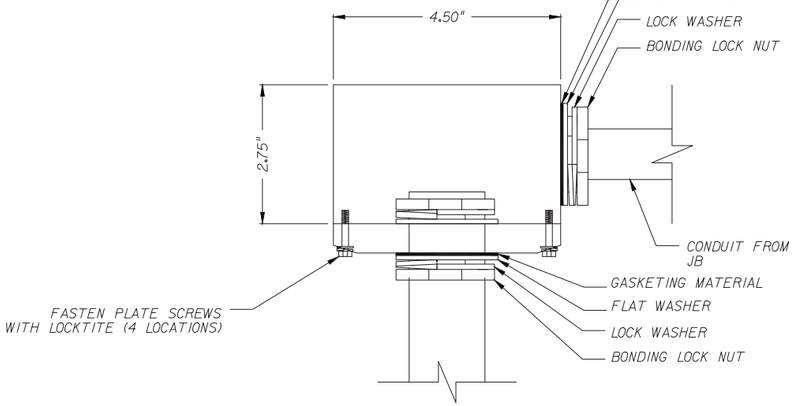

D 4 / M20.713 CCTV-JUNCTION/ MOUNTING BOX
NTS

NOTES:

1. FOR GENERAL NOTES AND ABBREVIATIONS SEE DRAWINGS C00.002G, AND C00.006A, C00.006B, C00.007A, C00.007B, C00.007C.
2. ALUMINUM BOX HAS 3/4" NPT OPENINGS ON ALL SIDES AND BOTTOM. A TOTAL OF 5 OPENINGS. ALL UNUSED OPENINGS SHALL BE SCALED W/ 3/4" CLOSURE PLUG.
3. ALL JUNCTION BOXES SHALL BE SECURELY MOUNTED TO UNDERSIDE OF CANOPY. ALL JUNCTION BOXES, CONDUITS, AND PENETRATIONS SHALL BE GASKETED AND WATER TIGHT.

NOTICE: THE OFFICIAL RECORD OF THIS SHEET IS THE ELECTRONIC FILE SIGNED AND SEALED UNDER RULE 61G15-23.003, F.A.C.

REVISIONS					
DATE	BY	DESCRIPTION	DATE	BY	DESCRIPTION

SYSTRA Engineering, Inc.
520 EIGHTH AVENUE,SUITE 2100
NEW YORK, NY 10018
T. (212) 494-9111 F. (212) 494-9112
Certificate of Authorization No. 6209
STEVE YAZBEK PE NO. 79153
www.systraconsulting.com

STATE OF FLORIDA
DEPARTMENT OF TRANSPORTATION

ROAD NO.	COUNTY	FINANCIAL PROJECT ID
CFRC P2S	VARIOUS	423446-9-52-01

CENTRAL FLORIDA COMMUTER RAIL TRANSIT (CFCRT) PHASE 2 SOUTH

TYPICAL STATION DETAILS
4 OF 4

SHEET NO.
261

$USER$ $DATE$ $TIME$ $FILE$

DRAWING NO.
M20.714

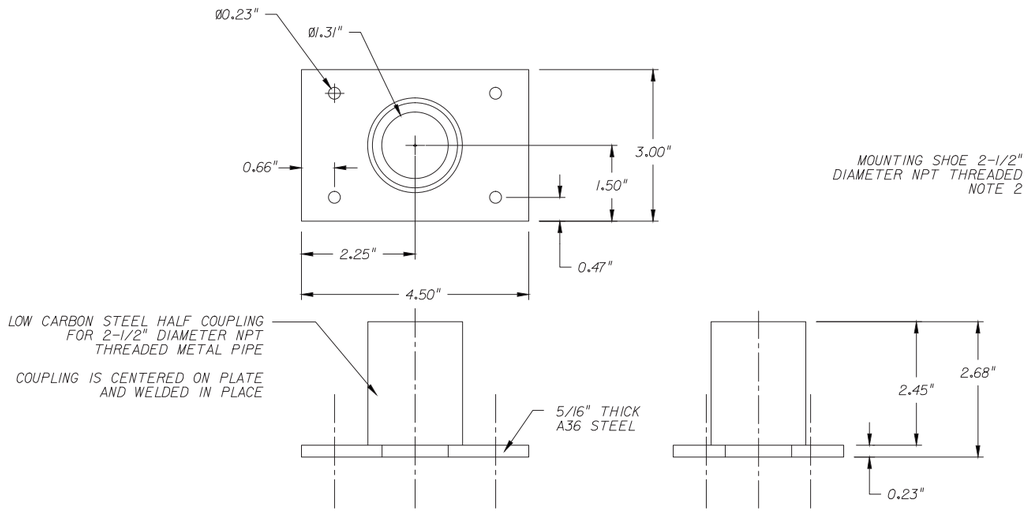

D 1 / M20.714 VMS MOUNTING SHOE DETAILS
3" = 1"

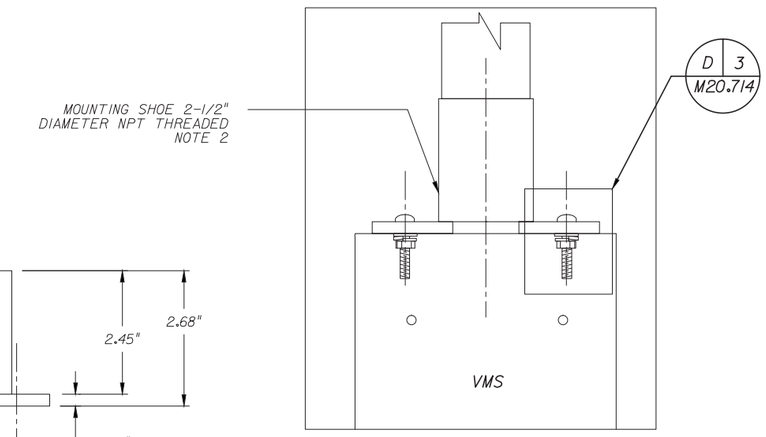

D 2 / M20.714 MOUNTING SHOE DETAILS
3" = 1"

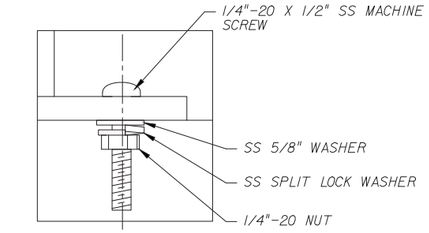

D 3 / M20.714 MOUNTING SHOE DETAILS
6" = 1"

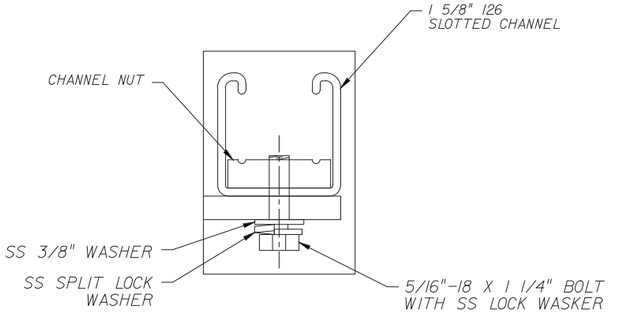

D 6 / M20.714 SLOTTED CHANNEL DETAILS
6" = 1"

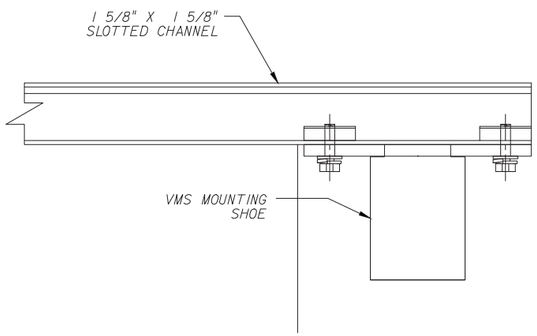

D 4 / M20.714 SLOTTED CHANNEL SIDE VIEW DETAILS
3" = 1"

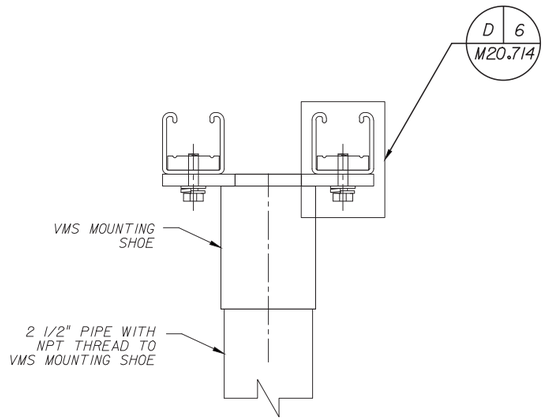

D 5 / M20.714 SLOTTED CHANNEL DETAILS
3" = 1"

NOTES:

1. FOR GENERAL NOTES AND ABBREVIATIONS SEE DRAWINGS C00.002G, AND C00.006A, C00.006B, C00.007A, C00.007B, C00.007C.
2. FASTEN MOUNTING SHOE TO VMS WITH 4 1/4"-20 X 1-1/2" STAINLESS STEEL MACHINE SCREW AND STAINLESS STEEL NUT WITH WASHER AND LOCK WASHER.
3. PIPE SHALL BE PAINTED COLOR TO MATCH VMS FINISH. PIPE LENGTH SHALL BE DETERMINED BY CONTRACTOR TO ALLOW FOR PROPER VMS HEIGHT CLEARANCES.

NOTICE: THE OFFICIAL RECORD OF THIS SHEET IS THE ELECTRONIC FILE SIGNED AND SEALED UNDER RULE 61G15-23.003, F.A.C.

REVISIONS					
DATE	BY	DESCRIPTION	DATE	BY	DESCRIPTION

SYSTRA Engineering, Inc.
520 EIGHTH AVENUE,SUITE 2100
NEW YORK, NY 10018
T. (212) 494-9111 F. (212) 494-9112
Certificate of Authorization No. 6209
STEVE YAZBEK PE NO. 79153
www.systraconsulting.com

STATE OF FLORIDA
DEPARTMENT OF TRANSPORTATION

ROAD NO.	COUNTY	FINANCIAL PROJECT ID
CFRC P2S	VARIOUS	423446-9-52-01

CENTRAL FLORIDA COMMUTER RAIL TRANSIT (CFCRT) PHASE 2 SOUTH

TYPICAL MOUNTING DETAIL

SHEET NO.
262

$USER$ $DATE$ $TIME$ $FILE$

DRAWING NO.
C14.005

1" = 180'

INSERT 1

BENCHMARK A2

BM A2
EL. 86.12 5/8" IRON ROD &
CAP STAMPED TRAVERSE LB 2856

INSERT 2

BENCHMARK A3

BM A3
EL. 84.99 5/8" IRON ROD &
CAP STAMPED TRAVERSE LB 2856

INSERT 3

BENCHMARK A1

BM A1
EL. 87.56 5/8" IRON ROD &
CAP STAMPED TRAVERSE LB 2856

INSERT 4

BENCHMARK A7

BM A7
EL. 87.36 REC PK NAIL & DISK
STAMPED TRAVERSE LB 2856

INSERT 5

BENCHMARK A6

BM A6
EL. 86.50 5/8" IRON ROD &
CAP STAMPED TRAVERSE LB 2856

INSERT 6

BENCHMARK A4

BM A4
EL. 83.25 5/8" IRON ROD &
CAP STAMPED TRAVERSE LB 2856

INSERT 7

BENCHMARK A5

BM A5
EL. 86.65 5/8" IRON ROD &
CAP STAMPED TRAVERSE LB 2856

INSERT 8

BENCHMARK A9

BM A9
EL. 92.47 5/8" IRON ROD &
CAP STAMPED TRAVERSE LB 2856

INSERT 9

BENCHMARK A8

BM A8
EL. 92.05 5/8" IRON ROD &
CAP STAMPED TRAVERSE LB 2856

INSERT 11

BENCHMARK IB1

BM IB1
EL. 90.52 5/8" IRON ROD &
CAP STAMPED TRAVERSE LB 2856

INSERT 10

BENCHMARK IA28

BM IA28
EL. 91.21 5/8" IRON ROD &
CAP STAMPED TRAVERSE LB 2856

INSERT 12

BENCHMARK IB2

BM IB2
EL. 88.84 5/8" IRON ROD &
CAP STAMPED TRAVERSE LB 2856

STATION SITE BOUNDARY
LANDSTAR BLVD
IDAHO WOODS LANE
FAIRWAY WOODS BLVD
DELAWARE WOODS LANE
CFRC R/W
CFRC MAINLINE TRACK 1
CR 527 SOUTH ORANGE AVENUE
42275
42280
42285
42290
42295
42300
S 3° 41' 06" E

REVISIONS					
DATE	BY	DESCRIPTION	DATE	BY	DESCRIPTION

TRANSPORTATION
AECOM TECHNICAL SERVICES, Inc.
300 Colonial Center Pkwy, Suite 130
Lake Mary, FL. 32746
T 407.549.4200 F 407.549.4201
Certificate of Authorization No. 8115
DAVID S. BURWELL PE NO. 55853 www.aecom.com

STATE OF FLORIDA
DEPARTMENT OF TRANSPORTATION

ROAD NO.	COUNTY	FINANCIAL PROJECT ID
CFRC P2S	ORANGE	423446-9-52-01

CENTRAL FLORIDA COMMUTER RAIL TRANSIT (CFCRT) PHASE 2 SOUTH

MEADOW WOODS STATION
EXISTING SITE PLAN

SHEET NO.
1441

PrinceK 5/24/2015 10:57:00 PM Q:\4234469520\roadway\C14-005 - Exist Site.dgn

NOTICE: THE OFFICIAL RECORD OF THIS SHEET IS THE ELECTRONIC FILE SIGNED AND SEALED UNDER RULE 61G15-23.003, F.A.C.

DRAWING NO.
C14.006

SHEET LAYOUT

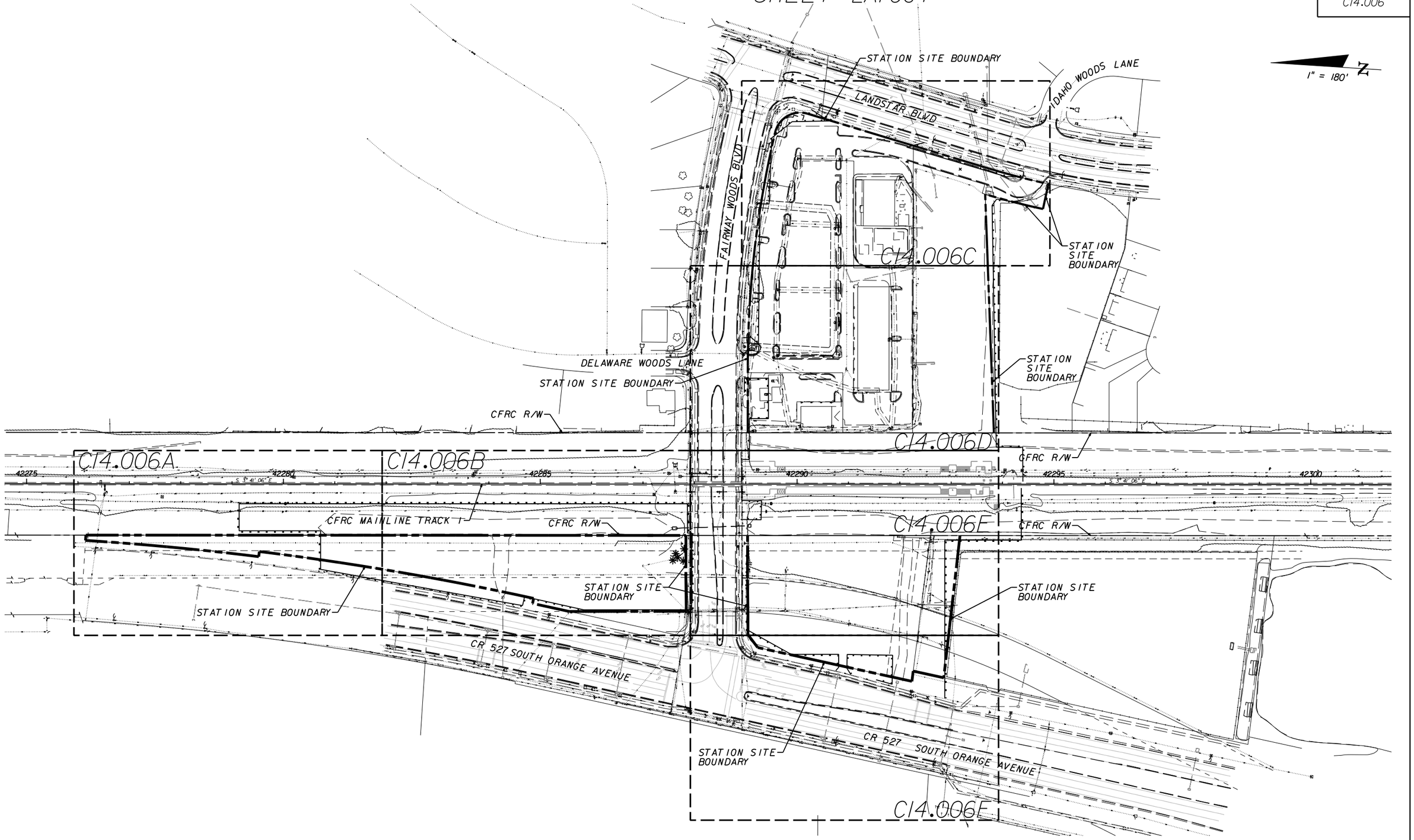

NOTICE: THE OFFICIAL RECORD OF THIS SHEET IS THE ELECTRONIC FILE SIGNED AND SEALED UNDER RULE 61G15-23.003, F.A.C.

REVISIONS					
DATE	BY	DESCRIPTION	DATE	BY	DESCRIPTION

TRANSPORTATION
AECOM TECHNICAL SERVICES, Inc.
300 Colonial Center Pkwy, Suite 130
Lake Mary, FL. 32746
T 407.549.4200 F 407.549.4201
Certificate of Authorization No. 8115
DAVID S. BURWELL PE NO. 55853 www.aecom.com

STATE OF FLORIDA
DEPARTMENT OF TRANSPORTATION

ROAD NO.	COUNTY	FINANCIAL PROJECT ID
CFRC P2S	ORANGE	423446-9-52-01

CENTRAL FLORIDA COMMUTER RAIL TRANSIT (CFCRT) PHASE 2 SOUTH

MEADOW WOODS STATION DEMOLITION PLAN

SHEET NO.
1442

PrinceK 5/24/2015 10:57:56 PM Q:\4234469520\roadway\C14-006 - Demo.dgn

DRAWING NO.
C14.006A

1" = 40'

42276 42277 42278 42279 42280 42281

CFRC MAINLINE TRACK 1

SEDIMENT BARRIER
REFER TO C14.010A

STATION SITE BOUNDARY

R/W

N 1,474,845.3376
E 535,714.5541
EL. 87.45

N 1,474,845.3421
E 535,704.2697
EL. 88.22

STATION SITE BOUNDARY

N 1,474,506.2241
E 535,704.5050
EL. 88.19

N 1,474,506.8032
E 535,694.5217
EL. 88.26

STATION SITE BOUNDARY

CR 527 SOUTH ORANGE AVENUE

MATCH LINE SEE DWG C14.006B

NOTICE: THE OFFICIAL RECORD OF THIS SHEET IS THE ELECTRONIC FILE SIGNED AND SEALED UNDER RULE 61G15-23.003, F.A.C.

REVISIONS					
DATE	BY	DESCRIPTION	DATE	BY	DESCRIPTION

TRANSPORTATION
AECOM TECHNICAL SERVICES, Inc.
300 Colonial Center Pkwy, Suite 130
Lake Mary, FL. 32746
T 407.549.4200 F 407.549.4201
Certificate of Authorization No. 8115
DAVID S. BURWELL PE NO. 55853 www.aecom.com

STATE OF FLORIDA
DEPARTMENT OF TRANSPORTATION

ROAD NO.	COUNTY	FINANCIAL PROJECT ID
CFRC P2S	ORANGE	423446-9-52-01

CENTRAL FLORIDA COMMUTER RAIL TRANSIT (CFCRT) PHASE 2 SOUTH

MEADOW WOODS STATION DEMOLITION PLAN

SHEET NO. 1443

PrinceK 5/24/2015 10:58:18 PM Q:\4234469520\roadway\C14-006A - Demo.dgn

DRAWING NO.
C14.006B

1" = 40'

42282 42283 42284 42285 42286 42287

CFRC MAINLINE TRACK 1

SEDIMENT BARRIER
REFER TO C14.010B

STATION SITE BOUNDARY

R/W

N 1,473,679.5828
E 535,789.6329
EL. 90.75

EXISTING WALL TO BE REMOVED

EXISTING TREE TO BE REMOVED

MATCH LINE SEE DWG C14.006A

SEE DWG C14.006E

STATION SITE BOUNDARY

SEDIMENT BARRIER
REFER TO C14.010B

N 1,473,967.4589
E 535,647.9989
EL. 88.80

N 1,473,968.9642
E 535,638.1098
EL. 89.25

N 1,473,897.0296
E 535,627.1601
EL. 88.99

CR 527 SOUTH ORANGE AVENUE

STATION SITE BOUNDARY

SEDIMENT BARRIER
REFER TO C14.010B

N 1,473,669.3416
E 535,642.2110
EL. 90.04

NOTICE: THE OFFICIAL RECORD OF THIS SHEET IS THE ELECTRONIC FILE SIGNED AND SEALED UNDER RULE 61G15-23.003, F.A.C.

REVISIONS

DATE	BY	DESCRIPTION	DATE	BY	DESCRIPTION

TRANSPORTATION
AECOM TECHNICAL SERVICES, Inc.
300 Colonial Center Pkwy, Suite 130
Lake Mary, FL. 32746
T 407.549.4200 F 407.549.4201
Certificate of Authorization No. 8115
DAVID S. BURWELL PE NO. 55853 www.aecom.com

STATE OF FLORIDA
DEPARTMENT OF TRANSPORTATION

ROAD NO.	COUNTY	FINANCIAL PROJECT ID
CFRC P2S	ORANGE	423446-9-52-01

CENTRAL FLORIDA COMMUTER RAIL TRANSIT (CFCRT) PHASE 2 SOUTH

MEADOW WOODS STATION DEMOLITION PLAN

SHEET NO. 1444

PrinceK 5/24/2015 10:58:22 PM Q:\4234469520\roadway\C14-006B - Demo.dgn

DRAWING NO.
C14.006C

1" = 40'

N 1,473,496.5510
E 536,624.6557
EL. 86.75

BEGIN TYPE F CURB & GUTTER REMOVAL

BEGIN SIDEWALK REMOVAL

END TYPE F CURB & GUTTER REMOVAL

LANDSTAR BLVD

SEDIMENT BARRIER REFER TO C14.010C

N 1,473,557.1940
E 536,584.2460
EL. 87.67

END SIDEWALK REMOVAL

STATION SITE BOUNDARY

BEGIN TYPE F CURB & GUTTER REMOVAL
N 1,473,019.8218
E 536,518.6096
EL. 84.80

STATION SITE BOUNDARY

FAIRWAY WOODS BLVD

BUILDING REMOVED BY OTHERS

EXISTING CURB AND ISLAND (TO BE REMOVED) TYP.

EXISTING INLET (TO REMAIN)

N 1,473,141.3208
E 536,490.6503
EL. 83.45

END TYPE F CURB & GUTTER REMOVAL

SEDIMENT BARRIER REFER TO C14.010C

EXISTING FENCE (TO BE REMOVED)

STATION SITE BOUNDARY

EXISTING FENCE (TO REMAIN)

N 1,473,027.1790
E 536,69.1538
EL. 77.46

EXISTING ASPHALT PARKING LOT (TO BE REMOVED)

EXISTING CONC SIDEWALK REMOVED BY OTHERS

SEDIMENT BARRIER REFER TO C14.010C

MATCH LINE SEE DWG C14.006D

NOTICE: THE OFFICIAL RECORD OF THIS SHEET IS THE ELECTRONIC FILE SIGNED AND SEALED UNDER RULE 61G15-23.003, F.A.C.

REVISIONS

DATE	BY	DESCRIPTION	DATE	BY	DESCRIPTION

TRANSPORTATION
AECOM TECHNICAL SERVICES, Inc.
300 Colonial Center Pkwy, Suite 130
Lake Mary, FL. 32746
T 407.549.4200 F 407.549.4201
Certificate of Authorization No. 8115
DAVID S. BURWELL PE NO. 55853 www.aecom.com

STATE OF FLORIDA
DEPARTMENT OF TRANSPORTATION

ROAD NO.	COUNTY	FINANCIAL PROJECT ID
CFRC P2S	ORANGE	423446-9-52-01

CENTRAL FLORIDA COMMUTER RAIL TRANSIT (CFCRT) PHASE 2 SOUTH

MEADOW WOODS STATION DEMOLITION PLAN

SHEET NO. 1445

PrinceK 5/24/2015 10:58:26 PM Q:\4234469520\roadway\C14-006C - Demo.dgn

MATCH LINE SEE DWG C14.006C

DRAWING NO.
C14.006D

1" = 40'

SEDIMENT BARRIER
REFER TO C14.010D

EXISTING ASHPALT PARKING LOT
(TO BE REMOVED)

EXISTING SIGNS
REMOVED BY OTHERS

FAIRWAY WOODS BLVD

STATION SITE BOUNDARY

BEGIN SIDEWALK REMOVAL

MULTI COLUMN SIGN
& BRICK PLANTER
REMOVED BY OTHERS

END TYPE F CURB
& GUTTER REMOVAL

EXISTING CURB AND ISLAND
(TO BE REMOVED)

SAWCUT AT FAIRWAY
WOODS BLVD EOP

BUILDING REMOVED BY OTHERS

BUILDING REMOVED BY OTHERS

BEGIN TYPE F CURB
& GUTTER REMOVAL

END SIDEWALK REMOVAL

EXISTING INLET
(TO REMAIN)

BUILDING REMOVED BY OTHERS

N 1,473,572.5111
E 535,996.9431
EL. 89.12

EXISTING FENCE
(TO BE REMOVED)

EXISTING CURB AND ISLAND
(TO BE REMOVED) TYP.

STATION SITE BOUNDARY

SEDIMENT BARRIER
REFER TO C14.010D

N 1,473,094.2042
E 536,027.7478
EL. 84.96

R/W

MATCH LINE SEE DWG C14.006E

NOTICE: THE OFFICIAL RECORD OF THIS SHEET IS THE ELECTRONIC FILE SIGNED AND SEALED UNDER RULE 61G15-23.003, F.A.C.

REVISIONS					
DATE	BY	DESCRIPTION	DATE	BY	DESCRIPTION

TRANSPORTATION
AECOM TECHNICAL SERVICES, Inc.
300 Colonial Center Pkwy, Suite 130
Lake Mary, FL. 32746
T 407.549.4200 F 407.549.4201
Certificate of Authorization No. 8115
DAVID S. BURWELL PE NO. 55853 www.aecom.com

STATE OF FLORIDA
DEPARTMENT OF TRANSPORTATION

ROAD NO.	COUNTY	FINANCIAL PROJECT ID
CFRC P2S	ORANGE	423446-9-52-01

CENTRAL FLORIDA COMMUTER RAIL TRANSIT (CFCRT) PHASE 2 SOUTH

MEADOW WOODS STATION DEMOLITION PLAN

SHEET NO.
1446

PrinceK 5/24/2015 10:58:30 PM Q:\4234469520\roadway\C14-006D - Demo.dgn

DRAWING NO.
C14.006E

MATCH LINE SEE DWG C14.006D

1" = 40'

42288 42289 42290 42291 42292 42293

CFRC MAINLINE TRACK 1

105

BEGIN SIDEWALK REMOVAL
BEGIN TYPE F CURB & GUTTER REMOVAL

SEDIMENT BARRIER REFER TO C14.01OE

R/W

END FENCE REMOVAL

N 1,473,559.8308
E 535,797.3455
EL. 89.29

N 1,473,147.1342
E 535,823.9246
EL. 87.23

MATCH LINE SEE DWG C14.006B

104

59" E
86° 20' FAIRWAY WOODS BLVD

EXISTING FENCE (TO BE REMOVED)

SEDIMENT BARRIER REFER TO C14.01OE

BEGIN FENCE REMOVAL

END TYPE F CURB & GUTTER REMOVAL
END SIDEWALK REMOVAL

STATION SITE BOUNDARY

103

SEDIMENT BARRIER REFER TO C14.01OE

STATION SITE BOUNDARY

N 1,473,546.6822
E 535,604.6854
EL. 88.37

MATCH LINE SEE DWG C14.006F

NOTICE: THE OFFICIAL RECORD OF THIS SHEET IS THE ELECTRONIC FILE SIGNED AND SEALED UNDER RULE 6G15-23.003, F.A.C.

REVISIONS					
DATE	BY	DESCRIPTION	DATE	BY	DESCRIPTION

TRANSPORTATION
AECOM TECHNICAL SERVICES, Inc.
300 Colonial Center Pkwy, Suite 130
Lake Mary, FL. 32746
T 407.549.4200 F 407.549.4201
Certificate of Authorization No. 8115
DAVID S. BURWELL PE NO. 55853 www.aecom.com

STATE OF FLORIDA
DEPARTMENT OF TRANSPORTATION

ROAD NO.	COUNTY	FINANCIAL PROJECT ID
CFRC P2S	ORANGE	423446-9-52-01

CENTRAL FLORIDA COMMUTER RAIL TRANSIT (CFCRT) PHASE 2 SOUTH

MEADOW WOODS STATION DEMOLITION PLAN

SHEET NO. 1447

MATCH LINE SEE DWG C14.006E

DRAWING NO.
C14.006F

1" = 40'

N 1,473,526.0910
E 535,580.8077
EL. 88.85

SEDIMENT BARRIER
REFER TO C14.010F

STATION SITE BOUNDARY

SEDIMENT BARRIER
REFER TO C14.010F

STATION SITE BOUNDARY

EXISTING LIGHT TO REMAIN

REMOVE MES REFER
TO C14.006F

BEGIN SIDEWALK REMOVAL

BEGIN TYPE F CURB
& GUTTER REMOVAL

N 1,473,221.0204
E 535,554.6051
EL. 87.39

N 1,473,222.2288
E 535,534.5545
EL. 87.56

STATION SITE BOUNDARY

SEDIMENT BARRIER
REFER TO C14.010F

N 1,473,160.7852
E 535,545.3624
EL. 87.98

END SIDEWALK REMOVAL

CR 527 SOUTH ORANGE AVENUE

END TYPE F CURB
& GUTTER REMOVAL

NOTICE: THE OFFICIAL RECORD OF THIS SHEET IS THE ELECTRONIC FILE SIGNED AND SEALED UNDER RULE 61G15-23.003, F.A.C.

REVISIONS					
DATE	BY	DESCRIPTION	DATE	BY	DESCRIPTION

TRANSPORTATION
AECOM TECHNICAL SERVICES, Inc.
300 Colonial Center Pkwy, Suite 130
Lake Mary, FL. 32746
T 407.549.4200 F 407.549.4201
Certificate of Authorization No. 8115
DAVID S. BURWELL PE NO. 55853 www.aecom.com

STATE OF FLORIDA
DEPARTMENT OF TRANSPORTATION

ROAD NO.	COUNTY	FINANCIAL PROJECT ID
CFRC P2S	ORANGE	423446-9-52-01

CENTRAL FLORIDA COMMUTER RAIL TRANSIT (CFCRT) PHASE 2 SOUTH

MEADOW WOODS STATION DEMOLITION PLAN

SHEET NO.
1448

PrinceK 5/24/2015 10:58:39 PM Q:\4234469520\roadway\C14-006F - Demo.dgn

DRAWING NO.
C14.010G

1" = 200'

LANDSTAR BOULEVARD

MEADOW WOODS
SITE 2
5.41 AC

EXISTING
POND

MEADOW WOODS
POND SITE 2
1.59 AC

POND 2

FAIRWAY WOODS BOULEVARD

DITCH 1
2.83 AC
(OFFSITE)

POND 1

MEADOW WOODS
SITE 1
4.13 AC
(OFFSITE)

EXISTING
POND

DITCH 2
1.89 AC
(OFFSITE)

MITIGATION
AREA
(EXISTING)

MEADOW WOODS
POND SITE 1
1.53 AC

MEADOW WOODS
SITE 3
3.43 AC

C14.010H

SOUTH ORANGE AVENUE

NOTICE: THE OFFICIAL RECORD OF THIS SHEET IS THE ELECTRONIC FILE SIGNED AND SEALED UNDER RULE 61G15-23.003, F.A.C.

REVISIONS					
DATE	BY	DESCRIPTION	DATE	BY	DESCRIPTION

Vanasse Hangen Brustlin, Inc.
Transportation, Land Development, Environmental Services
225 E. Robinson St., Suite 300
Orlando, FL 32801 (407)839-4006
Certificate of Authorization # 3932

Paul W. Yeargain, P.E.
PE # 50682

STATE OF FLORIDA
DEPARTMENT OF TRANSPORTATION

ROAD NO.	COUNTY	FINANCIAL PROJECT ID
CFRC P2S	ORANGE	423446-9-52-01

CENTRAL FLORIDA COMMUTER RAIL TRANSIT (CFCRT) PHASE 2 SOUTH

MEADOW WOODS STATION OVERALL DRAINAGE MAP

SHEET NO.
1449

hmartinez 5/20/2015 12:25:47 PM \\FL-ORL\projects\09220.01\cad\te\eng\Phase 2\drainage\C14-010G - Drainage Map.dgn

DRAWING NO.
C14.010H

FAIRWAY WOODS BOULEVARD

SOUTH ORANGE AVENUE

N

1" = 80'

S-101 0.53 AC S-121 S-113

S-102 0.43 AC S-103 0.60 AC

S-104 0.28 AC S-105 0.50 AC

0.15 AC S-107

S-109 S-106 0.80 AC S-114

S-108 0.14 AC

DITCH 2 BASIN

EXISTING POND

1.89 AC

S-115 S-116 CD-100

0.45 AC S-208

S-206 0.34 AC

S-204 0.34 AC

0.77 AC S-202

S-201 S-209

0.25 AC

DITCH 1 BASIN

2.83 AC

S-207 S-307 0.22 AC 0.27 AC S-308

0.31 AC

S-205 0.20 AC S-305 0.36 AC S-306

0.25 AC

S-203 S-303 0.54 AC S-304

0.26 AC

0.28 AC

S-301

0.23 AC 0.10 AC

S-302 0.29 AC

S-200 S-300 S-310

POND 2

S-400

EXISTING POND

NOTICE: THE OFFICIAL RECORD OF THIS SHEET IS THE ELECTRONIC FILE SIGNED AND SEALED UNDER RULE 61G15-23.003, F.A.C.

REVISIONS					
DATE	BY	DESCRIPTION	DATE	BY	DESCRIPTION

Vanasse Hangen Brustlin, Inc.
Transportation, Land Development, Environmental Services
225 E. Robinson St., Suite 300
Orlando, FL 32801 (407)839-4006
Certificate of Authorization # 3932

Paul W. Yeargain, P.E.
PE # 50682

STATE OF FLORIDA
DEPARTMENT OF TRANSPORTATION

ROAD NO.	COUNTY	FINANCIAL PROJECT ID
CFRC P2S	ORANGE	423446-9-52-01

CENTRAL FLORIDA COMMUTER RAIL TRANSIT (CFCRT) PHASE 2 SOUTH

MEADOW WOODS STATION DETAILED DRAINAGE MAP

SHEET NO. 1450

DRAWING NO.
C14.01OM

WETLAND LEGEND
O.S.W. IMPACT

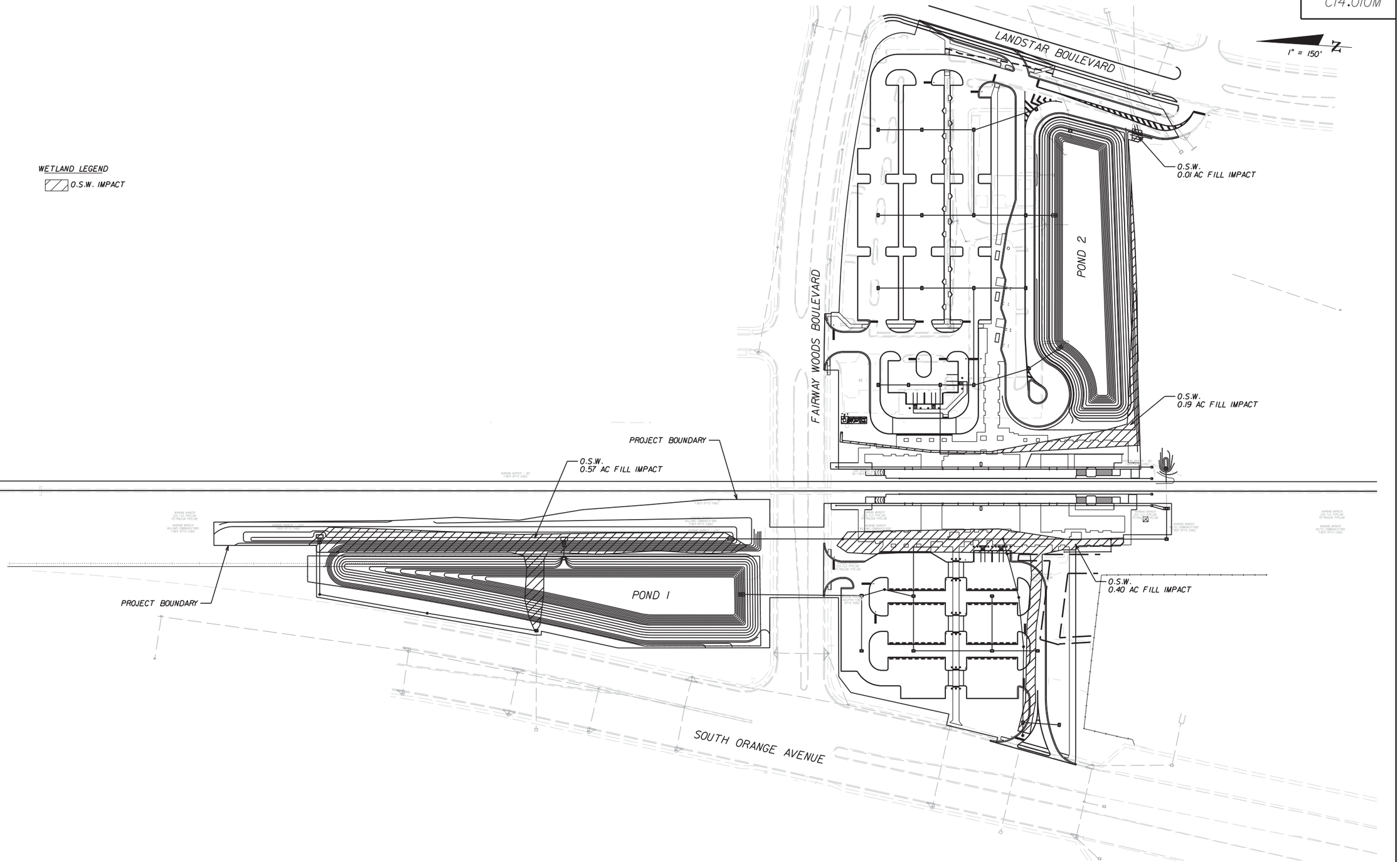

NOTICE: THE OFFICIAL RECORD OF THIS SHEET IS THE ELECTRONIC FILE SIGNED AND SEALED UNDER RULE 61G15-23.003, F.A.C.

REVISIONS					
DATE	BY	DESCRIPTION	DATE	BY	DESCRIPTION

Vanasse Hangen Brustlin, Inc.
Transportation, Land Development, Environmental Services
225 E. Robinson St., Suite 300
Orlando, FL 32801 (407)839-4006
Certificate of Authorization # 3932

Paul W. Yeargain, P.E.
PE # 50682

STATE OF FLORIDA DEPARTMENT OF TRANSPORTATION		
ROAD NO.	COUNTY	FINANCIAL PROJECT ID
CFRC P2S	ORANGE	423446-9-52-01

CENTRAL FLORIDA COMMUTER RAIL TRANSIT (CFCRT) PHASE 2 SOUTH

MEADOW WOODS STATION ENVIRONMENTAL PLAN

SHEET NO. 1451

QUANTITY	STR. NO.	NORTHING	EASTING	DESCRIPTION	BARRELS	PIPE												MANHOLES		12" YARD DRAIN	DITCH BOTTOM INLETS		CLEANOUT	SIDE DRAIN MITERED END SECTION				FES	UNDERDRAIN OUTLET	CLASS I CONC.	RIPRAP	DRAWING NO. C14.0I0N REMARKS
						TYPE II UNDERDRAINS		RCP	ERCP	OPTIONAL PIPE								P-8	J-8		D	F	8" TO 19.9"									
						6"	8"	18"	19" X 30"	18"	19" X 30"	8"	12"	15"	24"	30"	36"	<10'	<10'		<10'	<10'		19" X 30"	24"	30"	36"	8"	6"	CY	TN	
P	S-100	1473705.7016	535724.2459	MES	1																						1				
F																															
P	S-101	1473513.2980	535647.5429	Inlet, Pipe	1					84												1									
F																															
P	S-102	1473431.4701	535652.8523	Inlet, Pipe	1											83						1									
F																															
P	S-103	1473437.0709	535739.1708	Inlet, Pipe	1												44					1									
F																															
P	S-103A	1473483.4228	535746.5332	Manhole, Pipe	1												35		1												
F																															
P	S-104	1473307.7303	535660.8812	Inlet, Pipe	1										119							1									
F																															
P	S-105	1473313.3319	535747.2000	Inlet, Pipe	1					83												1									
F																															
P	S-106	1473235.8814	535665.5432	Inlet, Pipe	1					67												1									
F																															
P	S-107	1473251.8771	535550.9912	Inlet, Pipe	1										116							1									CONST. CONC. COLLAR
F																															
P	S-108	1473194.3928	535551.1094	Inlet, Pipe	1					54												1									
F																															
P	S-109	1473250.7313	535530.5315	Manhole, Pipe	1			16										1													
F																															
P	S-110	1473991.6770	535762.5426	Inlet, Pipe	1										15						1								0.50		Type D Modified
F																															
P	S-111	1473992.7972	535783.7929	MES	1																				1					19.6	
F																															
P	S-112	1473728.4101	535810.7134	MES, Pipe	1						169													1							
F																															
P	S-113	1473554.4265	535821.9186	Manhole, Pipe	1						252							1													
F																															
P	S-114	1473301.6352	535838.1994	Manhole, Pipe	1						170							1													
F																															
P	S-114A	1473131.7071	535849.1435	Manhole, Pipe	1						85							1													
F																															
P	S-115	1473044.2689	535854.7749	Inlet, Pipe	1										44							1									
F																															
P	S-116	1473047.3785	535903.0563	Inlet	1																	1								0.19		
F																															
P	S-117	1474377.9602	535762.9948	MES	1																				1					40.4	
F																															
P	S-118	1474372.5733	535681.1411	Manhole, Pipe	1										77			1													
F																															
P	S-119	1474201.2198	535662.4815	Manhole, Pipe	1										169			1													
F																															
P	S-120	1474027.3813	535646.1433	Inlet, Pipe	1										170							1									
F																															
P	S-121	1473518.9069	535734.6179	Inlet, Pipe	1												180					1									
F																															
P	S-122	1473271.1108	535747.8575	Manhole, Pipe	1										71			1													
F																															
P	S-122A	1473293.7881	535814.9746	Manhole, Pipe	1										26			1													
F																															
P	S-123	1473258.5767	535670.6204	Manhole, Pipe	1										78			1													
F																															
P	S-200	1473234.1802	536143.6915	MES	1																				1						
F																															
P	S-201	1473278.7446	536109.7139	Inlet, Pipe	1										50							1									
F																															
P	S-202	1473363.7089	536078.0909	Inlet, Pipe	1										25							1									
F																															
P	S-203	1473373.6117	536230.7121	Inlet, Pipe	1										148							1									
F																															
P	S-204	1473416.5960	536074.6593	Inlet, Pipe	1					49												1									
F																															
P	S-205	1473455.4397	536225.4027	Inlet, Pipe	1					78												1									
F																															

SHEET TOTALS - PLAN QUANTITY / FINAL QUANTITY

REVISIONS					
DATE	BY	DESCRIPTION	DATE	BY	DESCRIPTION

Vanasse Hangen Brustlin, Inc.
Transportation, Land Development, Environmental Services
225 E. Robinson St., Suite 300
Orlando, FL 32801 (407)839-4006
Certificate of Authorization # 3932

Paul W. Yeargain, P.E.
PE # 50682

STATE OF FLORIDA
DEPARTMENT OF TRANSPORTATION

ROAD NO.	COUNTY	FINANCIAL PROJECT ID
CFRC P2S	ORANGE	423446-9-52-01

CENTRAL FLORIDA COMMUTER RAIL TRANSIT (CFCRT) PHASE 2 SOUTH

MEADOW WOODS STATION SUMMARY OF DRAINAGE STRUCTURES

SHEET NO. 1452

NOTICE: THE OFFICIAL RECORD OF THIS SHEET IS THE ELECTRONIC FILE SIGNED AND SEALED UNDER RULE 61G15-23.003, F.A.C.

QUANTITY	STR. NO.	NORTHING	EASTING	DESCRIPTION	BARRELS	PIPE												MANHOLES		12" YARD DRAIN	DITCH BOTTOM INLETS		CLEANOUT	SIDE DRAIN MITERED END SECTION				FES	UNDERDRAIN OUTLET	CLASS I CONC.	RIPRAP	REMARKS
						TYPE II UNDERDRAINS		RCP	ERCP	OPTIONAL PIPE								P-8	J-8		D	F	8" TO 19.9"									
						6"	8"	18"	19" X 30"	18"	19" X 30"	8"	12"	15"	24"	30"	36"	<10'	<10'		<10'	<10'		19" X 30"	24"	30"	36"	8"	6"	CY	TN	
P	S-206	1473466.4911	536071.4218	Inlet, Pipe	1					46												1									
F																															
P	S-207	1473524.2949	536220.9350	Inlet, Pipe	1					65												1									
F																															
P	S-208	1473514.3920	536068.3137	Inlet, Pipe	1					44												1									
F																															
P	S-209	1473291.7822	536236.0217	Inlet, Pipe	1					78												1									
F																															
P	S-300	1473256.3319	536353.3685	MES	1																					1					
F																															
P	S-301	1473299.1411	536536.8662	Inlet, Pipe	1											37						1									
F																															
P	S-302	1473293.4265	536518.9558	Inlet, Pipe	1					100												1									
F																															
P	S-303	1473389.7993	536480.1908	Inlet, Pipe	1										78							1									
F																															
P	S-304	1473462.8861	536340.1647	Inlet, Pipe	1										130							1									
F																															
P	S-305	1473471.6272	536474.8814	Inlet, Pipe	1					78												1									
F																															
P	S-306	1473531.7413	536335.6970	Inlet, Pipe	1					78												1									
F																															
P	S-307	1473540.4824	536470.4137	Inlet, Pipe	1					65												1									
F																															
P	S-308	1473299.2202	536350.6552	Inlet, Pipe	1					65												1									
F																															
P	S-310	1473237.5802	536488.2161	Inlet	1																1								0.80		Conc. Collar, Type D Modified
F																															
P	S-400	1473131.0043	536489.6545	Headwall, Pipe	2				28																				2.82		Concrete Collar
F																															
P	YD-1	1473338.7815	536086.7661	Inlet, Pipe	1										62					1											P-Bottom
F																															
P	YD-2	1473409.5886	535965.8756	Inlet, Pipe	1								106							1											
F																															
P	YD-3	1473371.8136	535968.3085	Inlet, Pipe	1								38							1											
F																															
P	YD-4	1473266.0179	535975.1221	Inlet, Pipe	1							22								1											
F																															
P	YD-5	1473121.5187	535984.4285	Inlet, Pipe	1							145								1											
F																															
P	YD-6	1473442.0489	535816.4500	Inlet, Pipe	1									75						1											
F																															
P	YD-7	1473403.6849	535818.9208	Inlet, Pipe	1								38							1											
F																															
P	YD-8	1473281.8134	535819.0205	Inlet, Pipe	1								13							1											
F																															
P	YD-9	1473204.2544	535824.0156	Inlet, Pipe	1								74							1											
F																															
P	YD-10	1473130.4158	535829.0939	Inlet, Pipe	1								20							1											
F																															
P	S-020	1473572.3508	535934.8101	Cleanout, Pipe	1		300																1								8" CLEANOUT
F																															
P	S-021	1473272.9711	535954.0909	Cleanout, Pipe	1		197																1								8" CLEANOUT
F																															
P	S-022	1473075.0788	535966.8360	FES	1																						1				
F																															
P	S-030	1473471.3866	535923.0549	Cleanout, Pipe	1	200																	1								8" CLEANOUT
F																															
P	S-031	1473271.8001	535935.9090	Cleanout, Pipe	1	200																	1								8" CLEANOUT
F																															
P	S-032	1473073.9078	535948.6541	Outlet	1																							1			
F																															
P																															
F																															
P																															
F																															

SHEET TOTALS - FINAL QUANTITY / PLAN QUANTITY

DRAWING NO. C14.0100

NOTICE: THE OFFICIAL RECORD OF THIS SHEET IS THE ELECTRONIC FILE SIGNED AND SEALED UNDER RULE 61G15-23.003, F.A.C.

REVISIONS

DATE	BY	DESCRIPTION	DATE	BY	DESCRIPTION

Vanasse Hangen Brustlin, Inc.
Transportation, Land Development, Environmental Services
225 E. Robinson St., Suite 300
Orlando, FL 32801 (407)839-4006
Certificate of Authorization # 3932

Paul W. Yeargain, P.E.
PE # 50682

STATE OF FLORIDA
DEPARTMENT OF TRANSPORTATION

ROAD NO.	COUNTY	FINANCIAL PROJECT ID
CFRC P2S	ORANGE	423446-9-52-01

CENTRAL FLORIDA COMMUTER RAIL TRANSIT (CFCRT) PHASE 2 SOUTH

MEADOW WOODS STATION SUMMARY OF DRAINAGE STRUCTURES

SHEET NO. 1453

QUANTITY	STR. NO.	NORTHING	EASTING	DESCRIPTION	BARRELS	PIPE												MANHOLES		12" YARD DRAIN	DITCH BOTTOM INLETS		CLEANOUT	SIDE DRAIN MITERED END SECTION				FES	UNDERDRAIN OUTLET	CLASS I CONC.	RIPRAP	DRAWING NO. C14.010P
						TYPE II UNDERDRAINS		RCP	ERCP	OPTIONAL PIPE								P-8	J-8		D	F									REMARKS
						6"	8"	18"	19" X 30"	18"	19" X 30"	8"	12"	15"	24"	30"	36"	<10'	<10'		<10'	<10'	8" TO 19.9"	19" X 30"	24"	30"	36"	8"	6"	CY	TN	
P	S-040	1473469.8081	535898.5456	Cleanout, Pipe	1	200																	1									8" CLEANOUT
F																															
P	S-041	1473270.2216	535911.3998	Cleanout, Pipe	1	200																	1									8" CLEANOUT
F																															
P	S-042	1473072.3293	535924.1449	Outlet	1																							1				
F																															
P	S-050	1473568.4303	535873.9362	Cleanout, Pipe	1		300																1									8" CLEANOUT
F																															
P	S-051	1473269.0507	535893.2180	Cleanout, Pipe	1		197																1									8" CLEANOUT
F																															
P	S-052	1473071.1551	535905.9628	FES	1																							1				
F																															
P	CD-100	1473052.3381	535964.7988	Mes, Pipe	1										17										1							CONC. COLLAR
F																															
P																														

DRAWING NO.

C14.0100

GENERAL NOTES

1. The Contractor may use any of the optional pipe materials tabulated for a given structure. Only the material options tabulated for a given structure can be used.

2. Adjustment to the bid quantities, prices and payment will not be allowed due to increase or decrease in structure size, shape, length, width, depth or accessory construction necessary to accommodate the use of an optional pipe material other than the "plotted" option; likewise there will be no added or reduced compensation for structure alterations required to relieve utility conflicts which arise from the use of an optional material other than the "plotted" option.

3. Adjustment to the bid quantities, prices and payment will not be allowed due to increased or decreased excavation, bedding, borrow, backfilling, compaction, special installation requirements or disposal of excess materials due to use of any of the pipe optional materials. Likewise, adjustment in the quantities, prices and payment will not be allowed due to differences in end treatment size or types, pipe length, alternate jointing and connecting materials, saddles, cradles, filter fabrics, shoring or similar features due to the use of an optional material other than the "plotted" option.

4. If adjustments are required due to plan errors or omissions or authorized field changes, the "plotted" material and not the material elected by the Contractor would be used to establish new pay quantities.

5. The Contractor shall notify the Department in writing as to which optional pipe material he chooses to use at the preconstruction conference. Once identified the contactor may not change pipe material selected without the approval of the Engineer.

6. Pipe sizes other than round (Elliptical/Arch) are summarized and paid for using equivalent round pipe diameter.

STRUCTURE	SIZE (Inches)	MATERIAL	PLOTTED	AS BUILT	REMARKS
S-101, S-105, S-106, S-108	18	RCP CLASS I	X		
S-203, S-204, S-205, S-206		NRCP CLASS I			
S-207, S-208, S-302, S-305		HDPE, CLASS II			
S-306, S-307, S-308,		PVC, ASTM F-949			
S-110, S-118, S-120, S-122	24	RCP CLASS I	X		S-110, S-303, S-304
S-123, S-201, S-202 S-303		NRCP CLASS I			-EXCEPTION SRAP 16 GA
S-304		SRAP, 14 GA.			
		SRASP, 16 GA.			
		HDPE, CLASS II			
		PVC, ASTM F-949			
S-104, S-107, S-115, S-116	24	RCP CLASS I	X		
		NRCP CLASS I			
		HDPE, CLASS II			
		PVC, ASTM F-949			
S-102, S-301	30	RCP CLASS I	X		S-301
		NRCP CLASS I			-EXCEPTION SRAP 14GA
		SRAP, 12 GA.			SRASP 14GA
		SRASP, 16 GA.			
		HDPE, CLASS II			
		PVC, ASTM F-949			
S-103, S-103A, S-121	36	RCP CLASS I	X		
		NRCP CLASS I			
		SRAP, 12 GA.			
		SRASP, 16 GA.			
		HDPE, CLASS II			
		PVC, ASTM F-949			
S-112, S-113, S-114	19 x 30	ERCP CLASS I	X		

NOTICE: THE OFFICIAL RECORD OF THIS SHEET IS THE ELECTRONIC FILE SIGNED AND SEALED UNDER RULE 61G15-23.003, F.A.C.

REVISIONS					
DATE	BY	DESCRIPTION	DATE	BY	DESCRIPTION

Vanasse Hangen Brustlin, Inc.
Transportation, Land Development, Environmental Services
225 E. Robinson St., Suite 300
Orlando, FL 32801 (407)839-4006
Certificate of Authorization # 3932

Paul W. Yeargain, P.E.
PE # 50682

STATE OF FLORIDA
DEPARTMENT OF TRANSPORTATION

ROAD NO.	COUNTY	FINANCIAL PROJECT ID
CFRC P2S	ORANGE	423446-9-52-01

CENTRAL FLORIDA COMMUTER RAIL TRANSIT (CFCRT) PHASE 2 SOUTH

MEADOW WOODS STATION OPTIONAL MATERIALS TABULATION

SHEET NO. 1455

DRAWING NO.
C14.007

SHEET LAYOUT

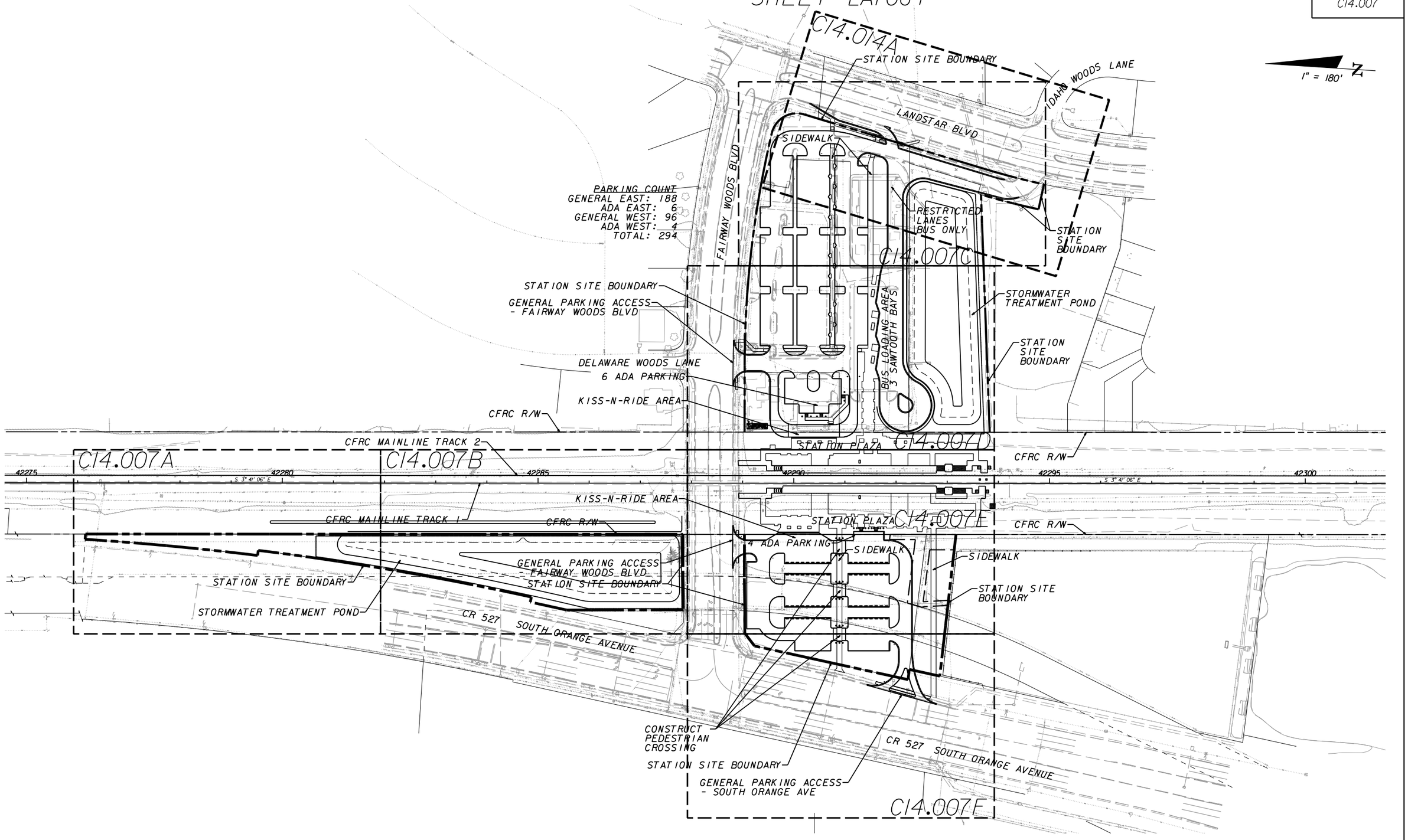

1" = 180'

NOTICE: THE OFFICIAL RECORD OF THIS SHEET IS THE ELECTRONIC FILE SIGNED AND SEALED UNDER RULE 61G15-23.003, F.A.C.

REVISIONS					
DATE	BY	DESCRIPTION	DATE	BY	DESCRIPTION

TRANSPORTATION
AECOM TECHNICAL SERVICES, Inc.
300 Colonial Center Pkwy, Suite 130
Lake Mary, FL. 32746
T 407.549.4200 F 407.549.4201
Certificate of Authorization No. 8115
DAVID S. BURWELL PE NO. 55853 www.aecom.com

STATE OF FLORIDA
DEPARTMENT OF TRANSPORTATION

ROAD NO.	COUNTY	FINANCIAL PROJECT ID
CFRC P2S	ORANGE	423446-9-52-01

CENTRAL FLORIDA COMMUTER RAIL TRANSIT (CFCRT) PHASE 2 SOUTH

MEADOW WOODS STATION
PROPOSED SITE PLAN

SHEET NO.
1456

PrinceK 5/25/2015 6:07:00 PM Q:\4234695201\roadway\C14-007 - prop site.dgn